FURTIF AMX5CK

STAND-ALONE without safety module

NON CONTACT CODED SWITCH WITH A LOCKING DEVICE

- Automatic integrated self-monitoring
- Electrical coded key locking : can be used in association with C4CK contactor
- Detection distance/hysteresis/misalignment: 10 /+2 /±9 (mm)
- 2NO 2A/48V + 2NC 24V/250mA
- Yellow LED : decoding
- Green LED : electrical interlocking
- Mounting brackets, M12 connector integrated
- Polycarbonate housing
- Temperature -20°C +60°C / Waterproof IP65

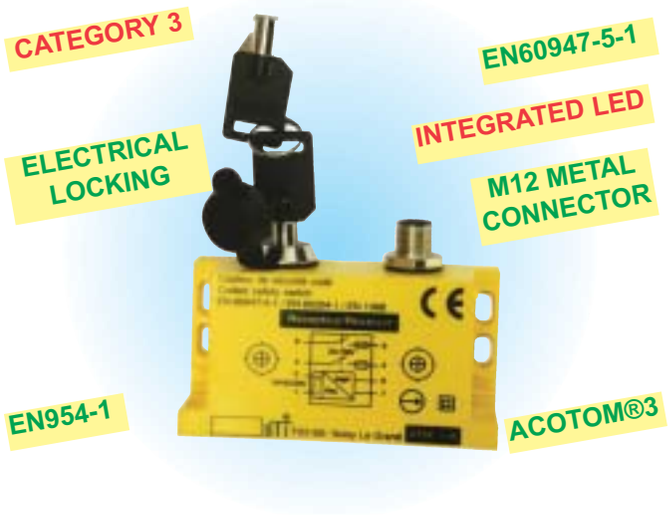

SAFETY CATEGORY

AMX5CK : category 3* according to EN954-1
category 4*with a safety module
* Regardless of number of switches in series

WIRING DIAGRAM

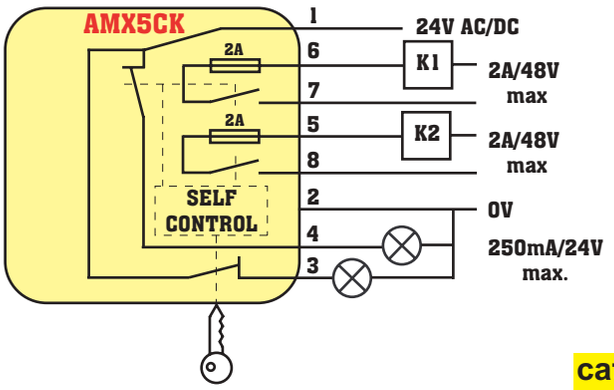

cat.3

DIMENSIONS

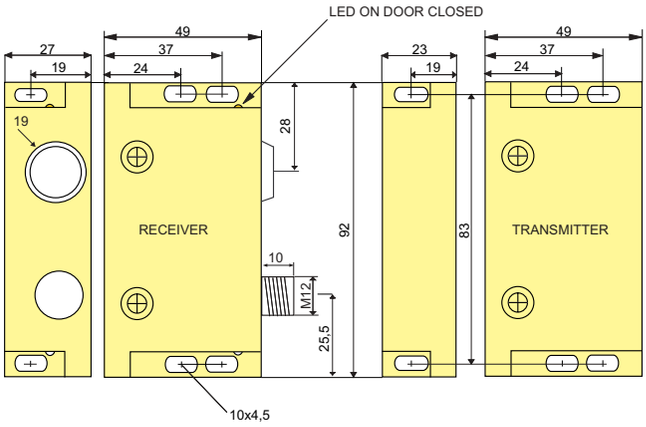

QUICK CONNECT PLUG

FRONT VIEW AMX5CK

1 brown: 0v 5 grey: NO2
2 white: +24v 6 yellow: AUX1
3 blue: NO1 7 green: AUX2
4 pink: NO1 8 red: NO2

AMX5CK in case of failure

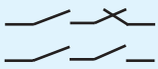

Our switches are equipped with a 2A fuse in order to guarantee electrical protection.

ADVICE

Transmission of key : contactor C4CKA and AMX5CK. It allows you to unlock a door of a dangerous zone ; your safety is ensured by means of a locking device. It may replace an interlocking device.