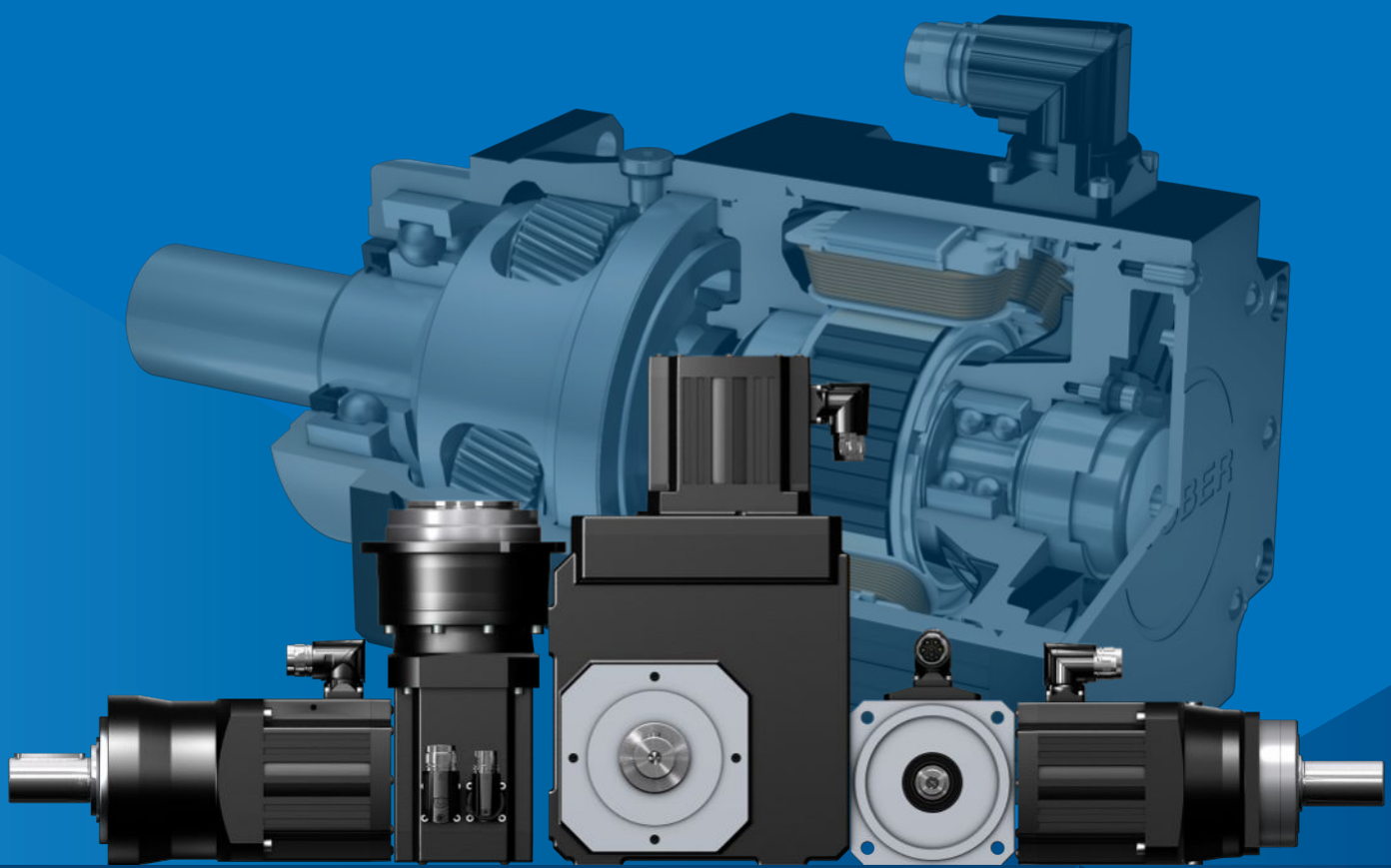

Synchronous servo geared motors

STÖBER

Synchronous servo geared motors

One partner. All the possibilities.

STOBER has developed and produced excellent drive technology since 1934 and is active internationally with around 800 employees at 14 locations. STOBER impresses machine manufacturers in wide-ranging industries and markets around the world with tailor-made, highly efficient drive systems for demanding movements.

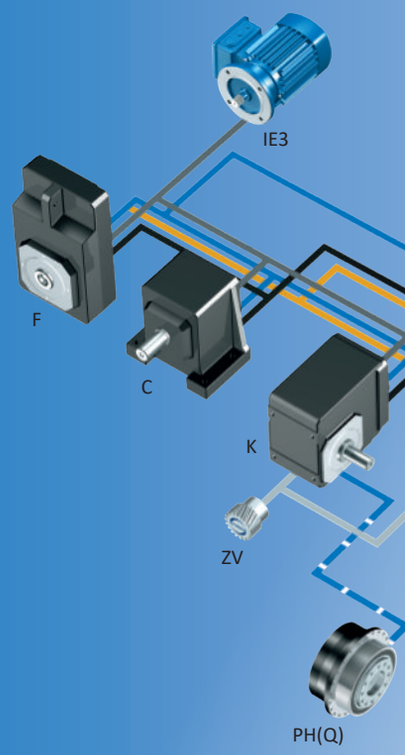

"Our vision is to be the preferred partner for perfect movement."

- Andreas Thiel, CEO of STÖBER Antriebstechnik.

Synchronous servo geared motors – what you can expect!

Power density redefined! Learn more about our powerhouses, the STOBER EZ and EZHD synchronous servo motors. You will be convinced of the latest servo technology for screw drives. They are extra dynamic and efficient in direct attachment with precise, high-performing STOBER servo gear units. It's impossible to be more compact.

At home in the world of demanding motion

Gear units

Geared motors

Motors

Cables and drive controllers

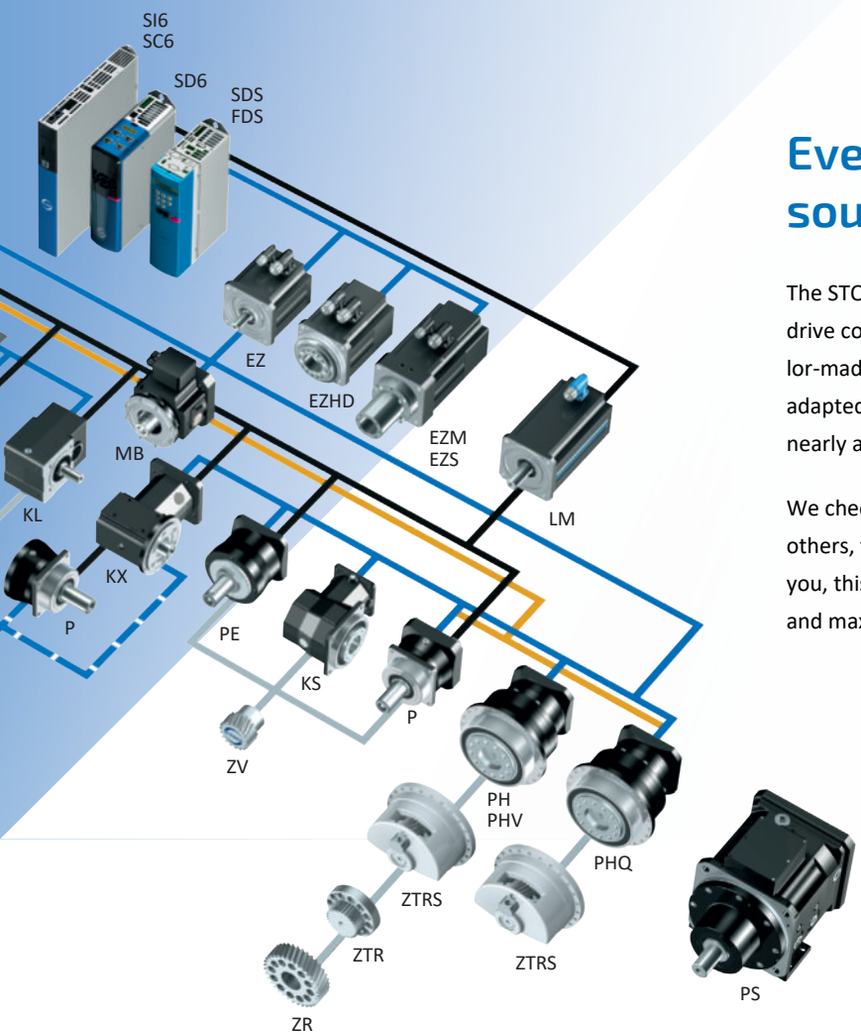

Everything from a single source.

The STOBER drive system consisting of gear units, motors, cables and drive controllers has a modular design and is freely scalable—for tailor-made, compact and powerful machine concepts. It can be adapted to your individual requirements and combined as needed in nearly all industries and applications areas.

We check every single component and how it works together with others, taking on the responsibility for the complete drive train. For you, this means that one contact partner, certified operating safety and maximum availability are guaranteed.

Need special solutions?

Numerous one-of-a-kind product highlights and project-related adjustments make it possible. With a holistic approach to your specific task, we work together on individualized solutions that are optimally coordinated to your requirements. Dedicated and solution-oriented in the support of your visions and projects.

STOBER moves integrally and precisely.

"We put ideas in motion with passion and a great deal of dedication. In the process, we rely on our decades of experience and an exceptionally broad range of products. Our customers benefit from precise, practical system solutions with uncompromising quality and expert individual consultation."

- Patrick Stöber, CEO of STÖBER Antriebstechnik.

STOBER moves as a team and with personality.

As a family-owned company, close relationships are extremely important to us. We build relationships with our employees, customers, and partners based on trust. We put people first.

We advocate for our employees' well-being, see things from our customers' perspectives, and demonstrate personal commitment to our mutual success.

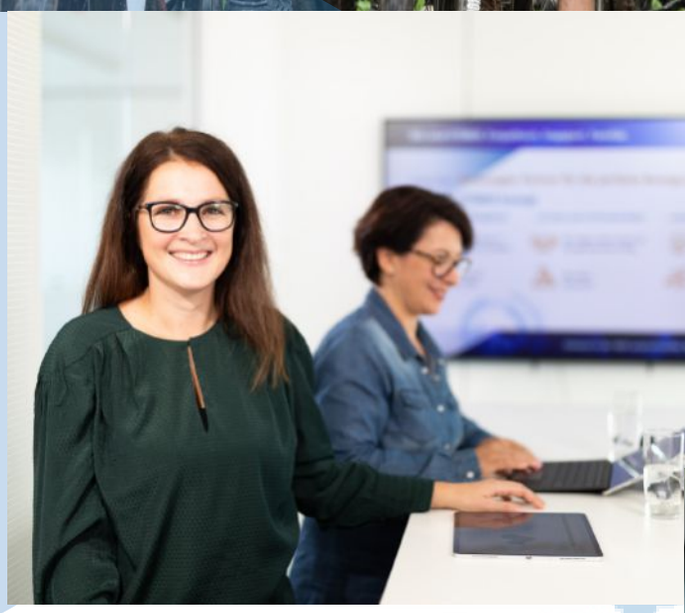

"We have installed gear units, motors and drive controllers from STOBER in nearly all our systems. STOBER supports us in new projects from the first stroke of a pencil in the design phase until commissioning. Our years of cooperation are shaped by openness and honesty and emanate a rather special spirit. The technical consulting, the support—that is real, experienced partnership"

- Jürgen Leicht, Managing Partner of Leicht Stanzautomation.

Working together. Worldwide. Successfully.

With an eye to the future, STOBER is facing the challenges of digitalization and investing in integrated solutions and a strong global production, sales and service presence. STOBER China was founded at the end of 2019. As a result, we are present in more than 40 countries around in the world with eleven subsidiaries and 80 service partners.

STOBER drives
Systems technology
Taicang, China.

Table of contents

1 Selection tool 9

2 P planetary geared motors 17

3 PH planetary geared motors 45

4 PHQ planetary geared motors 67

5 PHV planetary geared motors 91

6 PE planetary geared motors 103

7 C helical geared motors 119

8 F offset helical geared motors 169

9 KS right-angle servo geared motors 213

10 PKX right-angle planetary geared motors 241

11 PK right-angle planetary geared motors 273

12 PHKX right-angle planetary geared motors 305

13 PHK right-angle planetary geared motors 331

14 PHQK right-angle planetary geared motors 361

15 KL helical bevel geared motors 391

16 K helical bevel geared motors 425

17 EZ synchronous servo motors 513

18 EZHD synchronous servo motors with hollow shaft 555

19 EZM synchronous servo motors for screw drives 577

20 EZS synchronous servo motors for screw drives 599

21 Connecting to drive controllers of third-party manufacturers 625

22 Close to customers around the world 650

23 Appendix 653

1 Selection tool

1.1 Inline and Offset Geared Motors

Product chapter	**P**	**PE**	**C**	**F**
Chapter number	[▸ 2]	[▸ 6]	[▸ 7]	[▸ 8]
Technical data				
i	3 – 100	3 – 50	2 – 270	4.3 – 274
M_{2acc}	11 – 3450 Nm	11 – 250 Nm	9.7 – 6500 Nm	21 – 1100 Nm
$\Delta\phi_2$	1 – 8 arcmin	8 – 10 arcmin	10 – 20 arcmin	5 – 11 arcmin
η_{get}	95 – 97 %	95 – 97 %	96 – 97 %	96 – 97 %

An explanation of the formula symbols can be found in Chapter [▸ 23.1].

Features				
Power density	★★★★☆	★★★☆☆	★☆☆☆☆	★☆☆☆☆
Backlash	★★★★★	★★★☆☆	★★☆☆☆	★★★☆☆
Price category	€€	€	€	€
Shaft load	★★★★☆	★★☆☆☆	★★☆☆☆	★★★☆☆
Smooth operation	★★★★☆	★★★☆☆	★★★☆☆	★★★☆☆
Torsional stiffness	★★★☆☆	★★★☆☆	★★☆☆☆	★★☆☆☆
Mass moment of inertia	★★★★★	★★★★★	★★★★★	★★★★★
Key	★☆☆☆☆ good | ★★★★★ excellent € Economy | €€€€€ Premium			
Shaft design				
Solid shaft with feather key	✓	✓	✓	✓
Solid shaft without feather key	✓		C0 – C5: ✓ Starting at C6: Request	✓
Hollow shaft with keyway				✓
Hollow shaft with shrink ring				✓
Bearing design				
Standard	✓	✓	✓	✓
Axially reinforced	✓			
Radially reinforced	✓			
Maintenance-free	✓	✓	C0 – C5: ✓	✓

1 Selection tool

1.1 Inline and Offset Geared Motors

Product chapter	**PH**	**PHQ**	**PHV**
Chapter number	[▸ 3]	[4]	[▸ 5]

Technical data

i	4 – 100	5.5 – 600	61 – 121
M_{2acc}	24 – 7500 Nm	45 – 22000 Nm	1638 – 7500 Nm
$\Delta\phi_2$	1 – 4 arcmin	1 – 3 arcmin	3 arcmin
η_{get}	93 – 96 %	90 – 96 %	90 %

An explanation of the formula symbols can be found in Chapter [▸ 23.1].

Features

Power density	★★★★☆	★★★★★	★★★★☆
Backlash	★★★★★	★★★★★	★★★★☆
Price category	€€€	€€€€	€€€
Shaft load	★★★★★	★★★★★	★★★★★
Smooth operation	★★★★☆	★★★★☆	★★★★☆
Torsional stiffness	★★★★☆	★★★★★	★★★★☆
Mass moment of inertia	★★★★★	★★★★★	★★★★★
Key	★☆☆☆☆ good | ★★★★★ excellent € Economy | €€€€€ Premium		
Shaft design			
Flange shaft	✓	✓	✓
Bearing design			
Standard	✓	✓	✓
Reinforced	✓ (PH3 – PH5)	✓ (PHQ4 – PHQ5)	
Maintenance-free	✓	✓	✓

1 Selection tool

1.2 Right-angle geared motors

Product chapter	**KS**	**PKX**	**PK**
Chapter number	[▸ 9]	[10]	[▸ 11]
Technical data			
i	6 – 100	3 – 300	12 – 555
M_{2acc}	27 – 400 Nm	11 – 3300 Nm	68 – 3105 Nm
$\Delta\phi_2$	4 – 6 arcmin	2 – 8.5 arcmin	1.5 – 5 arcmin
η_{get}	93 – 95 %	94 – 96 %	94 %

An explanation of the formula symbols can be found in Chapter [▸ 23.1].

Features			
Power density	★★★☆☆	★★★★☆	★★★☆☆
Backlash	★★★☆☆	★★★★★	★★★★★
Price category	€€€	€€€	€€€
Shaft load	★★★★★	★★★★☆	★★★★☆
Smooth operation	★★★★☆	★★☆☆☆	★★★☆☆
Torsional stiffness	★★★☆☆	★★★☆☆	★★★☆☆
Mass moment of inertia	★★★★★	★★★☆☆	★★★★★
Key	★☆☆☆☆ good | ★★★★★ excellent € Economy | €€€€€ Premium		
Shaft design			
Solid shaft with feather key	✓	✓	✓
Solid shaft without feather key	✓	✓	✓
Hollow shaft with shrink ring	✓		
Flange hollow shaft	✓		
Bearing design			
Standard	✓	✓	✓
Axially reinforced		✓	✓
Radially reinforced		✓	✓
Maintenance-free	✓	✓	✓

1 Selection tool

1.2 Right-angle geared motors

Product chapter	**KS**	**PHKX**	**PHK**	**PHQK**
Chapter number	[▸ 9]	[▸ 12]	[▸ 13]	[▸ 14]
Technical data				
i	6 – 100	4 – 210	16 – 555	22 – 2242
M_{2acc}	27 – 400 Nm	26 – 2100 Nm	89 – 7500 Nm	123 – 43000 Nm
$\Delta\phi_2$	4 – 6 arcmin	1 – 6 arcmin	1.5 – 4.5 arcmin	1.5 – 4 arcmin
η_{get}	93 – 95 %	92 – 95 %	92 – 93 %	90 – 93 %

An explanation of the formula symbols can be found in Chapter [▸ 23.1].

Features				
Power density	★★★☆☆	★★★★★	★★★★☆	★★★★★
Backlash	★★★☆☆	★★★★★	★★★★★	★★★★★
Price category	€€€	€€€€	€€€€	€€€€€
Shaft load	★★★★★	★★★★★	★★★★★	★★★★★
Smooth operation	★★★★☆	★★☆☆☆	★★★☆☆	★★★☆☆
Torsional stiffness	★★★☆☆	★★★★☆	★★★★☆	★★★★★
Mass moment of inertia	★★★★★	★★★☆☆	★★★★★	★★★★★
Key	★☆☆☆☆ good | ★★★★★ excellent € Economy | €€€€€ Premium			
Shaft design				
Solid shaft with feather key	✓			
Solid shaft without feather key	✓			
Hollow shaft with shrink ring	✓			
Flange hollow shaft	✓			
Flange shaft		✓	✓	✓
Bearing design				
Standard	✓	✓	✓	✓
Reinforced		✓ (PH3 – PH5)	✓ (PH5)	✓ (PHQ5)
Maintenance-free	✓	✓	✓	✓

1 Selection tool

1.2 Right-angle geared motors

Product chapter	**KL**	**K**
Chapter number	[▸ 15]	[▸ 16]
Technical data		
i	4 – 32	4 – 381
M_{2acc}	11 – 65 Nm	23 – 13200 Nm
$\Delta\phi_2$	16 – 25 arcmin	1.5 – 12 arcmin
η_{get}	97 %	94 – 97 %

An explanation of the formula symbols can be found in Chapter [▸ 23.1].

Features		
Power density	★★☆☆☆	★★☆☆☆
Backlash	★☆☆☆☆	★★★☆☆
Price category	€	€€
Shaft load	★★☆☆☆	★★★☆☆
Smooth operation	★★☆☆☆	★★★☆☆
Torsional stiffness	★★☆☆☆	★★☆☆☆
Mass moment of inertia	★★★★★	★★★★★
Key	★☆☆☆☆ good | ★★★★★ excellent € Economy | €€€€€ Premium	
Shaft design		
Solid shaft with feather key	✓	✓
Solid shaft without feather key	✓	K1 – K4: ✓ Starting at K5: Request
Solid shaft on both sides	✓	✓
Hollow shaft with keyway	✓	✓
Hollow shaft with shrink ring	✓	✓
Accessories		
Flange	✓	✓
Foot plates	✓	✓
Torque arm bracket		✓
Bearing design		
Standard	✓	✓
Maintenance-free	✓	K1 – K4: ✓

1 Selection tool

1.3 Synchronous servo motors

Product chapter	**EZ**	**EZHD**
Chapter number	[▶ 17]	[▶ 18]
Technical data		
M_N	0.89 – 77.2 Nm	1.9 – 24.6 Nm
M_0	0.95 – 94 Nm	2.6 – 31.1 Nm

An explanation of the formula symbols can be found in the chapter Symbols in formulas.

Shaft design		
Solid shaft without feather key	✓	
Flange hollow shaft		✓
Encoder		
EnDat 2.2	✓	✓
EnDat 2.1	✓	✓
EnDat 3 One Cable Solution (OCS)	✓	
Resolver	✓	
Cooling		
Convection cooling	✓	✓
Forced ventilation	✓	
Brake		
Permanent magnet holding brake	✓	✓
Marks and test symbols		
CE	✓	✓
cURus	✓	✓

1 Selection tool

1.3 Synchronous servo motors

Product chapter	**EZM**	**EZS**
Chapter number	[▶ 19]	[▶ 20]
Technical data		
F_{ax}	751 – 21375 N	760 – 31271 N

An explanation of the formula symbols can be found in the chapter Symbols in formulas.

Shaft design		
Direct drive of the threaded nut	✓	
Direct drive of the threaded spindle		✓
Encoder		
EnDat 2.2	✓	✓
EnDat 2.1	✓	✓
EnDat 3 One Cable Solution (OCS)		✓
Resolver		✓
Cooling		
Convection cooling	✓	✓
Forced ventilation		✓
Brake		
Permanent magnet holding brake	✓	✓
Marks and test symbols		
CE	✓	✓
cURus	✓	✓

2 P planetary geared motors

Table of contents

2.1 Overview 18

2.2 Selection tables 19

2.3 Dimensional drawings 31

2.3.1 G shaft design (solid shaft without feather key) 32

2.3.2 P shaft design (solid shaft with feather key) 34

2.4 Type designation 36

2.4.1 Nameplate 36

2.5 Product description 37

2.5.1 Input options 37

2.5.2 Installation conditions 37

2.5.3 Lubricants 37

2.5.4 Position of the plug connectors 37

2.5.5 Other product features 38

2.5.6 Direction of rotation 38

2.6 Project configuration 38

2.6.1 Calculation of the operating point 38

2.6.2 Permitted shaft loads for the output shaft 41

2.6.3 Recommendation for radial shaft seal rings 43

2.6.4 Reverse operation 44

2.7 Additional documentation 44

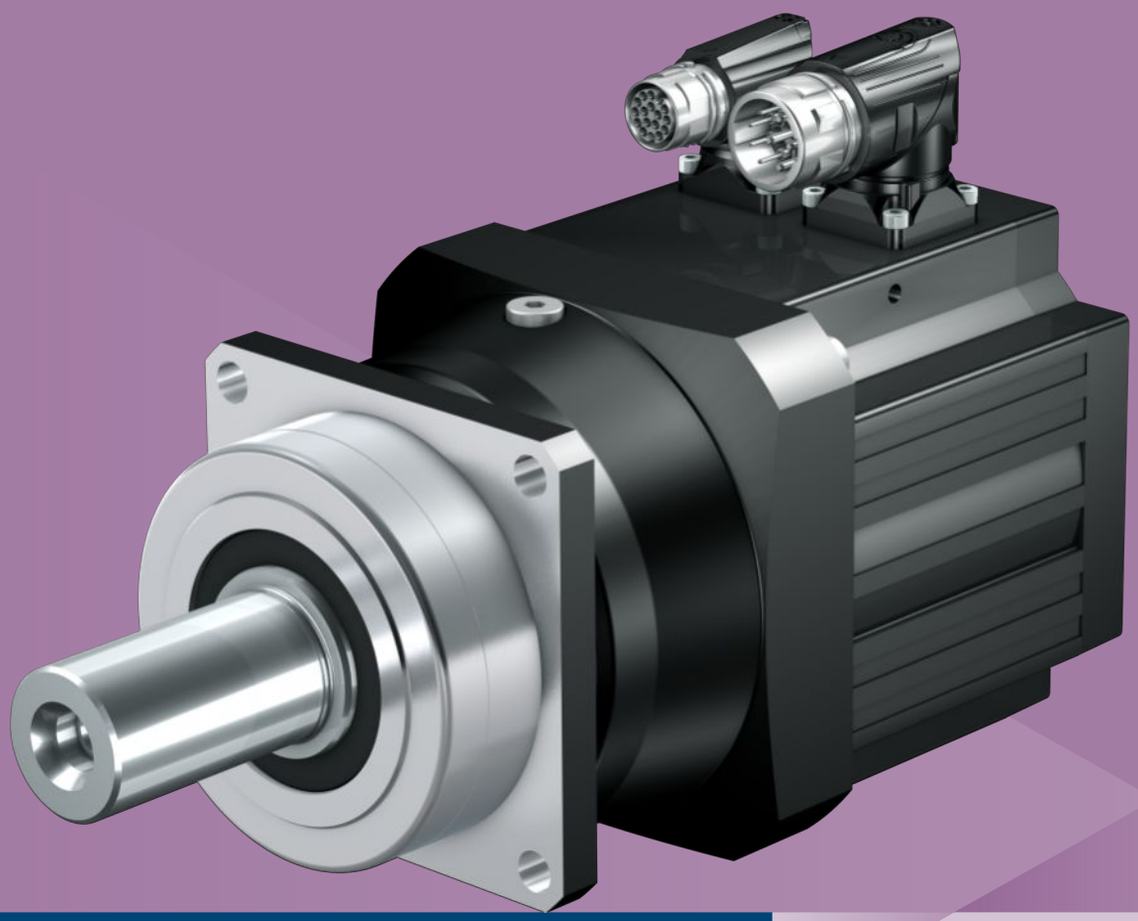

2 Planetary geared motors P

2.1 Overview

Helical-geared precision planetary geared motors

Features

Power density	★★★★☆
Backlash	★★★★★
Price category	€€
Shaft load	★★★★☆
Smooth operation	★★★★☆
Torsional stiffness	★★★☆☆
Mass moment of inertia	★★★★★
Helical gearing	✓
Maintenance-free	✓
Any mounting position	✓
Continuous operation without cooling	✓
Reinforced output bearing	✓ (optional)
Compact and highly dynamic due to direct motor attachment	✓

Key ★☆☆☆☆ good | ★★★★★ excellent
€ Economy | €€€€€ Premium

Technical data

i	3 – 100
M_{2acc}	11 – 3450 Nm
$\Delta\phi_2$	1 – 8 arcmin
η_{get}	95 – 97 %

2.2 Selection tables

The technical data specified in the selection tables applies to:

- Installation altitudes up to 1000 m above sea level
- Surrounding temperatures from 0 °C to 40 °C
- Drives with convection-cooled motors (e.g. EZ401**U**)
- M_{2acc}, M_{2accHT}: Solid shaft design without feather key (we generally recommend this shaft design for cyclic operation)

For the technical data on drives with forced ventilated motors (e.g. EZ401**B**), refer to http://configurator.stoeber.de.

An explanation of the formula symbols can be found in Chapter [▸ 23.1].

n_{2N} [rpm]	M_{2N} [Nm]	$M_{2,0}$ [Nm]	a_{th}	S	Type	M_{2acc} [Nm]	M_{2accHT} [Nm]	M_{2NOT} [Nm]	i	i_{exakt}	n_{1maxDB} [rpm]	n_{1maxZB} [rpm]	J_1 [kgcm²]	$\Delta\varphi_2$ [arcmin]	$\Delta\varphi_{2red}$ [arcmin]	C_2 [Nm/arcmin]	m [kg]
P2 (n_{1N} = 3000 rpm, $M_{2acc,max}$ = 25 Nm)																	
188	14	14	5.8	1.1	P232_0160 EZ301U	24	–	48	16.00	16/1	6000	8000	0.23	8.0	–	1.8	2.9
300	9.0	9.2	1.1	1.1	P231_0100 EZ301U	21	–	41	10.00	10/1	6000	8000	0.20	6.0	–	1.6	2.3
375	7.2	7.4	1.2	1.7	P231_0080 EZ301U	21	–	41	8.000	8/1	6000	8000	0.20	6.0	–	1.7	2.3
429	6.3	6.5	1.3	2.1	P231_0070 EZ301U	19	–	46	7.000	7/1	6000	8000	0.20	6.0	–	1.8	2.3
429	11	11	2.2	1.3	P231_0070 EZ302U	23	–	46	7.000	7/1	6000	8000	0.30	6.0	–	1.8	2.9
600	4.5	4.6	1.9	3.0	P231_0050 EZ301U	14	–	51	5.000	5/1	6000	8000	0.22	6.0	–	1.9	2.3
600	7.7	8.1	3.3	1.8	P231_0050 EZ302U	24	–	51	5.000	5/1	6000	8000	0.32	6.0	–	1.9	2.9
600	10	11	4.3	1.3	P231_0050 EZ303U	25	–	51	5.000	5/1	6000	8000	0.43	6.0	–	1.9	3.4
750	3.6	3.7	2.5	3.7	P231_0040 EZ301U	11	–	51	4.000	4/1	6000	8000	0.24	6.0	–	1.9	2.3
750	6.2	6.5	4.3	2.2	P231_0040 EZ302U	19	–	51	4.000	4/1	6000	8000	0.34	6.0	–	1.9	2.9
750	8.0	8.5	5.6	1.7	P231_0040 EZ303U	25	–	51	4.000	4/1	6000	8000	0.45	6.0	–	1.9	3.4
P2 (n_{1N} = 6000 rpm, $M_{2acc,max}$ = 25 Nm)																	
750	6.9	7.4	1.5	1.4	P231_0080 EZ301U	21	–	41	8.000	8/1	6000	8000	0.20	6.0	–	1.7	2.3
857	6.0	6.5	1.6	1.8	P231_0070 EZ301U	19	–	46	7.000	7/1	6000	8000	0.20	6.0	–	1.8	2.3
857	10	11	2.6	1.1	P231_0070 EZ302U	23	–	46	7.000	7/1	6000	8000	0.30	6.0	–	1.8	2.9
1200	4.3	4.6	2.3	2.5	P231_0050 EZ301U	14	–	51	5.000	5/1	6000	8000	0.22	6.0	–	1.9	2.3
1200	7.3	8.1	3.9	1.5	P231_0050 EZ302U	24	–	51	5.000	5/1	6000	8000	0.32	6.0	–	1.9	2.9
1200	9.5	11	5.1	1.1	P231_0050 EZ303U	25	–	51	5.000	5/1	6000	8000	0.43	6.0	–	1.9	3.4
1500	3.5	3.7	3.0	3.1	P231_0040 EZ301U	11	–	51	4.000	4/1	6000	8000	0.24	6.0	–	1.9	2.3
1500	5.8	6.5	5.1	1.8	P231_0040 EZ302U	19	–	51	4.000	4/1	6000	8000	0.34	6.0	–	1.9	2.9
1500	7.6	8.7	6.7	1.4	P231_0040 EZ303U	25	–	51	4.000	4/1	6000	8000	0.45	6.0	–	1.9	3.4
P3 (n_{1N} = 3000 rpm, $M_{2acc,max}$ = 75 Nm)																	
60	44	45	1.2	1.1	P332_0500 EZ301U	75	75	150	50.00	50/1	6000	8000	0.20	5.0	3.0	5.0	3.4
75	35	36	1.6	1.2	P332_0400 EZ301U	65	65	130	40.00	40/1	6000	8000	0.20	5.0	3.0	4.8	3.4
86	31	32	1.4	1.6	P332_0350 EZ301U	75	75	150	35.00	35/1	6000	8000	0.20	5.0	3.0	5.2	3.4
94	28	29	1.5	1.7	P332_0320 EZ301U	63	65	130	32.00	32/1	5500	8000	0.23	5.0	3.0	4.6	3.4
107	25	25	1.8	1.8	P332_0280 EZ301U	65	70	130	28.00	28/1	6000	8000	0.20	5.0	3.0	5.1	3.4
107	42	45	3.0	1.1	P332_0280 EZ302U	65	70	130	28.00	28/1	6000	8000	0.30	5.0	3.0	5.1	4.0
120	22	23	1.7	2.3	P332_0250 EZ301U	67	67	150	25.00	25/1	6000	8000	0.22	5.0	3.0	5.2	3.4
120	38	40	2.9	1.3	P332_0250 EZ302U	75	75	150	25.00	25/1	6000	8000	0.32	5.0	3.0	5.2	4.0
120	49	52	3.8	1.0	P332_0250 EZ303U	75	75	150	25.00	25/1	6000	8000	0.43	5.0	3.0	5.2	4.5
150	18	18	1.9	2.8	P332_0200 EZ301U	53	53	150	20.00	20/1	5500	8000	0.24	5.0	3.0	5.3	3.4
150	30	32	3.2	1.7	P332_0200 EZ302U	75	75	150	20.00	20/1	5500	8000	0.34	5.0	3.0	5.3	4.0
150	39	42	4.2	1.3	P332_0200 EZ303U	75	75	150	20.00	20/1	5500	8000	0.45	5.0	3.0	5.3	4.5
188	14	14	2.4	3.2	P332_0160 EZ301U	43	43	130	16.00	16/1	5500	8000	0.24	5.0	3.0	5.2	3.4
188	24	26	4.0	1.9	P332_0160 EZ302U	65	65	130	16.00	16/1	5500	8000	0.34	5.0	3.0	5.2	4.0
188	31	33	5.2	1.4	P332_0160 EZ303U	65	65	130	16.00	16/1	5500	8000	0.45	5.0	3.0	5.2	4.5
250	11	11	4.1	2.8	P332_0120 EZ301U	32	32	100	12.00	12/1	5500	8000	0.25	5.0	3.0	4.7	3.4
250	18	19	7.0	1.7	P332_0120 EZ302U	50	50	100	12.00	12/1	5500	8000	0.35	5.0	3.0	4.7	4.0
250	24	25	9.1	1.3	P332_0120 EZ303U	50	50	100	12.00	12/1	5500	8000	0.46	5.0	3.0	4.7	4.5
300	9.0	9.2	0.5	3.2	P331_0100 EZ301U	27	27	120	10.00	10/1	5500	8000	0.21	4.0	2.0	4.4	3.0
300	15	16	0.9	1.9	P331_0100 EZ302U	49	49	120	10.00	10/1	5500	8000	0.31	4.0	2.0	4.4	3.6
300	20	21	1.1	1.4	P331_0100 EZ303U	60	60	120	10.00	10/1	5500	8000	0.42	4.0	2.0	4.4	4.1
300	27	29	1.5	1.1	P331_0100 EZ401U	60	60	120	10.00	10/1	5500	8000	0.95	4.0	2.0	4.4	5.5
375	7.2	7.4	0.5	4.8	P331_0080 EZ301U	22	22	130	8.000	8/1	5000	8000	0.22	4.0	2.0	4.7	3.0
375	12	13	0.9	2.8	P331_0080 EZ302U	39	39	130	8.000	8/1	5000	8000	0.32	4.0	2.0	4.7	3.6
375	16	17	1.2	2.2	P331_0080 EZ303U	54	54	130	8.000	8/1	5000	8000	0.43	4.0	2.0	4.7	4.1
375	22	23	1.6	1.6	P331_0080 EZ401U	63	65	130	8.000	8/1	5000	8000	0.96	4.0	2.0	4.7	5.5
429	11	11	1.0	3.6	P331_0070 EZ302U	34	34	140	7.000	7/1	5000	8000	0.33	4.0	2.0	5.1	3.6
429	14	15	1.3	2.8	P331_0070 EZ303U	48	48	140	7.000	7/1	5000	8000	0.44	4.0	2.0	5.1	4.1
429	19	20	1.7	2.1	P331_0070 EZ401U	58	58	140	7.000	7/1	5000	8000	0.97	4.0	2.0	5.1	5.5

n_{2N} [rpm]	M_{2N} [Nm]	$M_{2,0}$ [Nm]	a_{th}	S	Type	M_{2acc} [Nm]	M_{2accHT} [Nm]	M_{2NOT} [Nm]	i	i_{exakt}	n_{1maxDB} [rpm]	n_{1maxZB} [rpm]	J_1 [kgcm²]	$\Delta\varphi_2$ [arcmin]	$\Delta\varphi_{2red}$ [arcmin]	C_2 [Nm/ arcmin]	m [kg]
P3 (n_{1N} = 3000 rpm, $M_{2acc,max}$ = 75 Nm)																	
429	32	35	2.9	1.2	P331_0070 EZ402U	69	75	140	7.000	7/1	5000	8000	1.7	4.0	2.0	5.1	6.6
600	10	11	1.9	3.9	P331_0050 EZ303U	34	34	150	5.000	5/1	4500	8000	0.48	4.0	2.0	5.5	4.1
600	14	15	2.6	2.9	P331_0050 EZ401U	41	41	150	5.000	5/1	4500	8000	1.0	4.0	2.0	5.5	5.5
600	23	25	4.3	1.7	P331_0050 EZ402U	75	78	150	5.000	5/1	4500	8000	1.7	4.0	2.0	5.5	6.6
750	8.0	8.5	2.5	4.9	P331_0040 EZ303U	27	27	130	4.000	4/1	4000	8000	0.53	4.0	2.0	5.5	4.1
750	11	12	3.3	3.6	P331_0040 EZ401U	33	33	130	4.000	4/1	4000	8000	1.1	4.0	2.0	5.5	5.5
750	18	20	5.6	2.2	P331_0040 EZ402U	62	62	130	4.000	4/1	4000	8000	1.8	4.0	2.0	5.5	6.6
1000	6.0	6.4	5.2	4.4	P331_0030 EZ303U	20	20	100	3.000	3/1	3500	7000	0.68	4.0	2.0	5.3	4.1
1000	8.1	8.7	7.1	3.2	P331_0030 EZ401U	25	25	100	3.000	3/1	3500	7000	1.2	4.0	2.0	5.3	5.5
1000	14	15	12	1.9	P331_0030 EZ402U	47	47	100	3.000	3/1	3500	7000	1.9	4.0	2.0	5.3	6.6
P3 (n_{1N} = 6000 rpm, $M_{2acc,max}$ = 75 Nm)																	
171	30	32	1.5	1.5	P332_0350 EZ301U	75	75	150	35.00	35/1	6000	8000	0.20	5.0	3.0	5.2	3.4
188	27	29	1.8	1.5	P332_0320 EZ301U	63	65	130	32.00	32/1	5500	8000	0.23	5.0	3.0	4.6	3.4
214	24	25	2.0	1.6	P332_0280 EZ301U	65	70	130	28.00	28/1	6000	8000	0.20	5.0	3.0	5.1	3.4
240	21	23	1.8	2.1	P332_0250 EZ301U	67	67	150	25.00	25/1	6000	8000	0.22	5.0	3.0	5.2	3.4
240	36	40	3.0	1.3	P332_0250 EZ302U	75	75	150	25.00	25/1	6000	8000	0.32	5.0	3.0	5.2	4.0
300	17	18	2.0	2.7	P332_0200 EZ301U	53	53	150	20.00	20/1	5500	8000	0.24	5.0	3.0	5.3	3.4
300	29	32	3.4	1.6	P332_0200 EZ302U	75	75	150	20.00	20/1	5500	8000	0.34	5.0	3.0	5.3	4.0
300	37	43	4.4	1.2	P332_0200 EZ303U	75	75	150	20.00	20/1	5500	8000	0.45	5.0	3.0	5.3	4.5
375	14	14	2.6	2.8	P332_0160 EZ301U	43	43	130	16.00	16/1	5500	8000	0.24	5.0	3.0	5.2	3.4
375	23	26	4.5	1.7	P332_0160 EZ302U	65	65	130	16.00	16/1	5500	8000	0.34	5.0	3.0	5.2	4.0
375	30	34	5.8	1.3	P332_0160 EZ303U	65	65	130	16.00	16/1	5500	8000	0.45	5.0	3.0	5.2	4.5
500	10	11	4.3	2.7	P332_0120 EZ301U	32	32	100	12.00	12/1	5500	8000	0.25	5.0	3.0	4.7	3.4
500	17	19	7.3	1.6	P332_0120 EZ302U	50	50	100	12.00	12/1	5500	8000	0.35	5.0	3.0	4.7	4.0
500	22	26	9.5	1.2	P332_0120 EZ303U	50	50	100	12.00	12/1	5500	8000	0.46	5.0	3.0	4.7	4.5
600	8.6	9.2	0.6	2.6	P331_0100 EZ301U	27	27	120	10.00	10/1	5500	8000	0.21	4.0	2.0	4.4	3.0
600	15	16	1.0	1.6	P331_0100 EZ302U	49	49	120	10.00	10/1	5500	8000	0.31	4.0	2.0	4.4	3.6
600	19	22	1.4	1.2	P331_0100 EZ303U	60	60	120	10.00	10/1	5500	8000	0.42	4.0	2.0	4.4	4.1
600	22	27	1.6	1.0	P331_0100 EZ401U	60	60	120	10.00	10/1	5500	8000	0.95	4.0	2.0	4.4	5.5
750	6.9	7.4	0.7	4.0	P331_0080 EZ301U	22	22	130	8.000	8/1	5000	8000	0.22	4.0	2.0	4.7	3.0
750	12	13	1.1	2.4	P331_0080 EZ302U	39	39	130	8.000	8/1	5000	8000	0.32	4.0	2.0	4.7	3.6
750	15	17	1.4	1.8	P331_0080 EZ303U	54	54	130	8.000	8/1	5000	8000	0.43	4.0	2.0	4.7	4.1
750	18	22	1.7	1.6	P331_0080 EZ401U	63	65	130	8.000	8/1	5000	8000	0.96	4.0	2.0	4.7	5.5
750	27	38	2.6	1.0	P331_0080 EZ402U	63	65	130	8.000	8/1	5000	8000	1.7	4.0	2.0	4.7	6.6
857	10	11	1.2	3.1	P331_0070 EZ302U	34	34	140	7.000	7/1	5000	8000	0.33	4.0	2.0	5.1	3.6
857	13	15	1.5	2.3	P331_0070 EZ303U	48	48	140	7.000	7/1	5000	8000	0.44	4.0	2.0	5.1	4.1
857	16	19	1.8	2.0	P331_0070 EZ401U	58	58	140	7.000	7/1	5000	8000	0.97	4.0	2.0	5.1	5.5
857	24	33	2.7	1.3	P331_0070 EZ402U	69	75	140	7.000	7/1	5000	8000	1.7	4.0	2.0	5.1	6.6
1200	7.3	8.1	1.7	4.3	P331_0050 EZ302U	24	24	150	5.000	5/1	4500	8000	0.37	4.0	2.0	5.5	3.6
1200	9.5	11	2.3	3.3	P331_0050 EZ303U	34	34	150	5.000	5/1	4500	8000	0.48	4.0	2.0	5.5	4.1
1200	11	14	2.6	2.8	P331_0050 EZ401U	41	41	150	5.000	5/1	4500	8000	1.0	4.0	2.0	5.5	5.5
1200	17	24	4.0	1.8	P331_0050 EZ402U	75	78	150	5.000	5/1	4500	8000	1.7	4.0	2.0	5.5	6.6
1500	7.6	8.7	3.0	4.1	P331_0040 EZ303U	27	27	130	4.000	4/1	4000	8000	0.53	4.0	2.0	5.5	4.1
1500	8.9	11	3.5	3.5	P331_0040 EZ401U	33	33	130	4.000	4/1	4000	8000	1.1	4.0	2.0	5.5	5.5
1500	14	19	5.3	2.3	P331_0040 EZ402U	62	62	130	4.000	4/1	4000	8000	1.8	4.0	2.0	5.5	6.6
2000	4.4	4.9	4.8	4.8	P331_0030 EZ302U	15	15	100	3.000	3/1	3500	7000	0.57	4.0	2.0	5.3	3.6
2000	5.7	6.5	6.2	3.6	P331_0030 EZ303U	20	20	100	3.000	3/1	3500	7000	0.68	4.0	2.0	5.3	4.1
2000	6.7	8.1	7.3	3.1	P331_0030 EZ401U	25	25	100	3.000	3/1	3500	7000	1.2	4.0	2.0	5.3	5.5
2000	10	14	11	2.0	P331_0030 EZ402U	47	47	100	3.000	3/1	3500	7000	1.9	4.0	2.0	5.3	6.6
P4 (n_{1N} = 3000 rpm, $M_{2acc,max}$ = 140 Nm)																	
38	71	72	0.6	1.3	P432_0800 EZ301U	120	120	230	80.00	80/1	5000	8000	0.21	5.0	3.0	9.6	5.4
43	62	63	0.6	1.6	P432_0700 EZ301U	130	130	250	70.00	70/1	5000	8000	0.21	5.0	3.0	11	5.4
54	49	51	0.7	1.8	P432_0560 EZ301U	120	120	230	56.00	56/1	5000	8000	0.23	5.0	3.0	9.6	5.4
60	44	45	0.7	2.3	P432_0500 EZ301U	130	130	260	50.00	50/1	5000	8000	0.21	5.0	3.0	12	5.4
60	76	80	1.1	1.3	P432_0500 EZ302U	130	140	260	50.00	50/1	5000	8000	0.31	5.0	3.0	12	6.0
75	35	36	0.9	2.5	P432_0400 EZ301U	110	110	260	40.00	40/1	5000	8000	0.21	5.0	3.0	12	5.4
75	60	64	1.5	1.4	P432_0400 EZ302U	130	130	260	40.00	40/1	5000	8000	0.31	5.0	3.0	12	6.0
75	79	83	1.9	1.1	P432_0400 EZ303U	130	130	260	40.00	40/1	5000	8000	0.42	5.0	3.0	12	6.5
86	31	32	0.8	3.3	P432_0350 EZ301U	93	93	270	35.00	35/1	4500	8000	0.23	5.0	3.0	12	5.4
86	53	56	1.3	1.9	P432_0350 EZ302U	130	140	270	35.00	35/1	4500	8000	0.33	5.0	3.0	12	6.0
86	69	73	1.8	1.5	P432_0350 EZ303U	130	140	270	35.00	35/1	4500	8000	0.44	5.0	3.0	12	6.5
86	93	100	2.4	1.1	P432_0350 EZ401U	130	140	270	35.00	35/1	4500	8000	0.97	5.0	3.0	12	7.9
94	28	29	0.9	3.2	P432_0320 EZ301U	85	85	250	32.00	32/1	4000	8000	0.30	5.0	3.0	9.6	5.4
94	48	51	1.6	1.9	P432_0320 EZ302U	130	130	250	32.00	32/1	4000	8000	0.40	5.0	3.0	9.6	6.0
94	63	67	2.1	1.4	P432_0320 EZ303U	130	130	250	32.00	32/1	4000	8000	0.51	5.0	3.0	9.6	6.5

n_{2N} [rpm]	M_{2N} [Nm]	$M_{2,0}$ [Nm]	a_{th}	S	Type	M_{2acc} [Nm]	M_{2accHT} [Nm]	M_{2NOT} [Nm]	i	i_{exakt}	n_{1maxDB} [rpm]	n_{1maxZB} [rpm]	J_1 [kgcm²]	$\Delta\varphi_2$ [arcmin]	$\Delta\varphi_{2red}$ [arcmin]	C_2 [Nm/ arcmin]	m [kg]
P4 (n_{1N} = 3000 rpm, $M_{2acc,max}$ = 140 Nm)																	
94	85	91	2.8	1.1	P432_0320 EZ401U	130	130	250	32.00	32/1	4000	8000	1.0	5.0	3.0	9.6	7.9
107	25	25	0.9	3.8	P432_0280 EZ301U	74	74	260	28.00	28/1	4500	8000	0.23	5.0	3.0	12	5.4
107	42	45	1.6	2.2	P432_0280 EZ302U	130	130	260	28.00	28/1	4500	8000	0.33	5.0	3.0	12	6.0
107	55	58	2.1	1.7	P432_0280 EZ303U	130	130	260	28.00	28/1	4500	8000	0.44	5.0	3.0	12	6.5
107	74	80	2.9	1.3	P432_0280 EZ401U	130	130	260	28.00	28/1	4500	8000	0.97	5.0	3.0	12	7.9
120	22	23	1.0	4.5	P432_0250 EZ301U	67	67	270	25.00	25/1	4500	8000	0.27	5.0	3.0	13	5.4
120	38	40	1.6	2.6	P432_0250 EZ302U	120	120	270	25.00	25/1	4500	8000	0.37	5.0	3.0	13	6.0
120	49	52	2.1	2.0	P432_0250 EZ303U	130	140	270	25.00	25/1	4500	8000	0.48	5.0	3.0	13	6.5
120	67	71	2.9	1.5	P432_0250 EZ401U	130	140	270	25.00	25/1	4500	8000	1.0	5.0	3.0	13	7.9
150	30	32	1.9	3.1	P432_0200 EZ302U	95	95	270	20.00	20/1	4000	8000	0.41	5.0	3.0	12	6.0
150	39	42	2.5	2.4	P432_0200 EZ303U	130	130	270	20.00	20/1	4000	8000	0.52	5.0	3.0	12	6.5
150	53	57	3.4	1.8	P432_0200 EZ401U	130	140	270	20.00	20/1	4000	8000	1.0	5.0	3.0	12	7.9
150	89	99	5.7	1.1	P432_0200 EZ402U	130	140	270	20.00	20/1	4000	8000	1.7	5.0	3.0	12	9.0
188	24	26	2.3	3.7	P432_0160 EZ302U	76	76	260	16.00	16/1	4000	8000	0.42	5.0	3.0	12	6.0
188	31	33	3.0	2.8	P432_0160 EZ303U	110	110	260	16.00	16/1	4000	8000	0.53	5.0	3.0	12	6.5
188	43	46	4.0	2.1	P432_0160 EZ401U	130	130	260	16.00	16/1	4000	8000	1.1	5.0	3.0	12	7.9
188	71	79	6.8	1.2	P432_0160 EZ402U	130	130	260	16.00	16/1	4000	8000	1.8	5.0	3.0	12	9.0
250	18	19	3.9	3.3	P432_0120 EZ302U	57	57	200	12.00	12/1	3500	7000	0.44	5.0	3.0	11	6.0
250	24	25	5.1	2.5	P432_0120 EZ303U	80	80	200	12.00	12/1	3500	7000	0.55	5.0	3.0	11	6.5
250	32	34	6.9	1.9	P432_0120 EZ401U	97	97	200	12.00	12/1	3500	7000	1.1	5.0	3.0	11	7.9
250	54	59	12	1.1	P432_0120 EZ402U	100	100	200	12.00	12/1	3500	7000	1.8	5.0	3.0	11	9.0
300	27	29	0.9	2.2	P431_0100 EZ401U	82	82	230	10.00	10/1	4000	8000	0.98	4.0	2.0	9.1	6.5
300	42	46	1.4	1.4	P431_0100 EZ501U	120	120	230	10.00	10/1	4000	8000	2.9	4.0	2.0	9.1	7.5
300	46	50	1.5	1.3	P431_0100 EZ402U	120	120	230	10.00	10/1	4000	8000	1.7	4.0	2.0	9.1	7.6
375	22	23	1.0	3.2	P431_0080 EZ401U	66	66	240	8.000	8/1	4000	8000	1.0	4.0	2.0	9.8	6.5
375	33	36	1.5	2.1	P431_0080 EZ501U	120	120	240	8.000	8/1	4000	8000	3.0	4.0	2.0	9.8	7.5
375	36	40	1.7	1.9	P431_0080 EZ402U	120	120	240	8.000	8/1	4000	8000	1.7	4.0	2.0	9.8	7.6
375	54	67	2.5	1.3	P431_0080 EZ404U	120	130	240	8.000	8/1	4000	8000	3.0	4.0	2.0	9.8	9.7
375	57	62	2.6	1.2	P431_0080 EZ502U	120	130	240	8.000	8/1	4000	8000	5.3	4.0	2.0	9.8	9.0
429	19	20	1.1	3.9	P431_0070 EZ401U	58	58	270	7.000	7/1	4000	8000	1.0	4.0	2.0	11	6.5
429	29	32	1.7	2.5	P431_0070 EZ501U	110	110	270	7.000	7/1	4000	8000	3.0	4.0	2.0	11	7.5
429	32	35	1.9	2.3	P431_0070 EZ402U	110	110	270	7.000	7/1	4000	8000	1.7	4.0	2.0	11	7.6
429	47	58	2.7	1.6	P431_0070 EZ404U	140	140	270	7.000	7/1	4000	8000	3.1	4.0	2.0	11	9.7
429	50	54	2.9	1.5	P431_0070 EZ502U	140	140	270	7.000	7/1	4000	8000	5.3	4.0	2.0	11	9.0
429	66	75	3.8	1.1	P431_0070 EZ503U	140	140	270	7.000	7/1	4000	8000	7.7	4.0	2.0	11	10
600	21	23	2.5	3.6	P431_0050 EZ501U	78	78	280	5.000	5/1	3700	7000	3.1	4.0	2.0	13	7.5
600	23	25	2.8	3.3	P431_0050 EZ402U	78	78	280	5.000	5/1	3700	7000	1.8	4.0	2.0	13	7.6
600	33	42	4.1	2.2	P431_0050 EZ404U	140	140	280	5.000	5/1	3700	7000	3.2	4.0	2.0	13	9.7
600	36	39	4.4	2.1	P431_0050 EZ502U	140	150	280	5.000	5/1	3700	7000	5.4	4.0	2.0	13	9.0
600	47	54	5.7	1.6	P431_0050 EZ503U	140	150	280	5.000	5/1	3700	7000	7.8	4.0	2.0	13	10
600	65	78	8.0	1.1	P431_0050 EZ505U	140	150	280	5.000	5/1	3700	7000	12	4.0	2.0	13	13
750	17	18	3.3	4.5	P431_0040 EZ501U	62	62	240	4.000	4/1	3300	6500	3.3	4.0	2.0	13	7.5
750	18	20	3.6	4.1	P431_0040 EZ402U	62	62	240	4.000	4/1	3300	6500	2.0	4.0	2.0	13	7.6
750	27	33	5.3	2.8	P431_0040 EZ404U	110	110	240	4.000	4/1	3300	6500	3.3	4.0	2.0	13	9.7
750	29	31	5.7	2.6	P431_0040 EZ502U	120	120	240	4.000	4/1	3300	6500	5.6	4.0	2.0	13	9.0
750	38	43	7.5	2.0	P431_0040 EZ503U	120	130	240	4.000	4/1	3300	6500	7.9	4.0	2.0	13	10
750	52	62	10	1.4	P431_0040 EZ505U	120	130	240	4.000	4/1	3300	6500	13	4.0	2.0	13	13
1000	13	14	8.0	3.5	P431_0030 EZ501U	47	47	200	3.000	3/1	3000	6000	3.7	4.0	2.0	13	7.5
1000	14	15	8.7	3.2	P431_0030 EZ402U	47	47	200	3.000	3/1	3000	6000	2.4	4.0	2.0	13	7.6
1000	20	25	13	2.2	P431_0030 EZ404U	84	84	200	3.000	3/1	3000	6000	3.8	4.0	2.0	13	9.7
1000	22	23	14	2.0	P431_0030 EZ502U	90	90	200	3.000	3/1	3000	6000	6.0	4.0	2.0	13	9.0
1000	28	32	18	1.5	P431_0030 EZ503U	100	100	200	3.000	3/1	3000	6000	8.4	4.0	2.0	13	10
1000	39	47	25	1.1	P431_0030 EZ505U	100	100	200	3.000	3/1	3000	6000	13	4.0	2.0	13	13
P4 (n_{1N} = 4500 rpm, $M_{2acc,max}$ = 140 Nm)																	
643	65	104	4.3	1.0	P431_0070 EZ505U	140	140	270	7.000	7/1	4000	8000	12	4.0	2.0	11	13
900	46	74	6.4	1.4	P431_0050 EZ505U	140	150	280	5.000	5/1	3700	7000	12	4.0	2.0	13	13
1125	37	59	8.4	1.8	P431_0040 EZ505U	120	130	240	4.000	4/1	3300	6500	13	4.0	2.0	13	13
1500	28	45	20	1.4	P431_0030 EZ505U	100	100	200	3.000	3/1	3000	6000	13	4.0	2.0	13	13
P4 (n_{1N} = 6000 rpm, $M_{2acc,max}$ = 140 Nm)																	
75	68	72	0.6	1.2	P432_0800 EZ301U	120	120	230	80.00	80/1	5000	8000	0.21	5.0	3.0	9.6	5.4
86	59	63	0.6	1.4	P432_0700 EZ301U	130	130	250	70.00	70/1	5000	8000	0.21	5.0	3.0	11	5.4
107	47	51	0.8	1.7	P432_0560 EZ301U	120	120	230	56.00	56/1	5000	8000	0.23	5.0	3.0	9.6	5.4
120	42	45	0.8	2.0	P432_0500 EZ301U	130	130	260	50.00	50/1	5000	8000	0.21	5.0	3.0	12	5.4
120	71	80	1.3	1.2	P432_0500 EZ302U	130	140	260	50.00	50/1	5000	8000	0.31	5.0	3.0	12	6.0
150	34	36	0.9	2.4	P432_0400 EZ301U	110	110	260	40.00	40/1	5000	8000	0.21	5.0	3.0	12	5.4

n_{2N} [rpm]	M_{2N} [Nm]	$M_{2,0}$ [Nm]	a_{th}	S	Type	M_{2acc} [Nm]	M_{2accHT} [Nm]	M_{2NOT} [Nm]	i	i_{exakt}	n_{1maxDB} [rpm]	n_{1maxZB} [rpm]	J_1 [kgcm²]	$\Delta\varphi_2$ [arcmin]	$\Delta\varphi_{2red}$ [arcmin]	C_2 [Nm/ arcmin]	m [kg]
P4 (n_{1N} = 6000 rpm, $M_{2acc,max}$ = 140 Nm)																	
150	57	64	1.5	1.4	P432_0400 EZ302U	130	130	260	40.00	40/1	5000	8000	0.31	5.0	3.0	12	6.0
150	74	86	2.0	1.1	P432_0400 EZ303U	130	130	260	40.00	40/1	5000	8000	0.42	5.0	3.0	12	6.5
171	30	32	0.9	2.9	P432_0350 EZ301U	93	93	270	35.00	35/1	4500	8000	0.23	5.0	3.0	12	5.4
171	50	56	1.5	1.7	P432_0350 EZ302U	130	140	270	35.00	35/1	4500	8000	0.33	5.0	3.0	12	6.0
171	65	75	2.0	1.3	P432_0350 EZ303U	130	140	270	35.00	35/1	4500	8000	0.44	5.0	3.0	12	6.5
171	76	93	2.3	1.1	P432_0350 EZ401U	130	140	270	35.00	35/1	4500	8000	0.97	5.0	3.0	12	7.9
188	27	29	1.0	3.0	P432_0320 EZ301U	85	85	250	32.00	32/1	4000	8000	0.30	5.0	3.0	9.6	5.4
188	46	51	1.7	1.8	P432_0320 EZ302U	130	130	250	32.00	32/1	4000	8000	0.40	5.0	3.0	9.6	6.0
188	60	68	2.2	1.3	P432_0320 EZ303U	130	130	250	32.00	32/1	4000	8000	0.51	5.0	3.0	9.6	6.5
188	70	85	2.6	1.1	P432_0320 EZ401U	130	130	250	32.00	32/1	4000	8000	1.0	5.0	3.0	9.6	7.9
214	24	25	1.0	3.6	P432_0280 EZ301U	74	74	260	28.00	28/1	4500	8000	0.23	5.0	3.0	12	5.4
214	40	45	1.7	2.1	P432_0280 EZ302U	130	130	260	28.00	28/1	4500	8000	0.33	5.0	3.0	12	6.0
214	52	60	2.2	1.6	P432_0280 EZ303U	130	130	260	28.00	28/1	4500	8000	0.44	5.0	3.0	12	6.5
214	61	74	2.6	1.4	P432_0280 EZ401U	130	130	260	28.00	28/1	4500	8000	0.97	5.0	3.0	12	7.9
240	21	23	1.1	4.0	P432_0250 EZ301U	67	67	270	25.00	25/1	4500	8000	0.27	5.0	3.0	13	5.4
240	36	40	1.8	2.4	P432_0250 EZ302U	120	120	270	25.00	25/1	4500	8000	0.37	5.0	3.0	13	6.0
240	47	53	2.4	1.8	P432_0250 EZ303U	130	140	270	25.00	25/1	4500	8000	0.48	5.0	3.0	13	6.5
240	55	67	2.8	1.6	P432_0250 EZ401U	130	140	270	25.00	25/1	4500	8000	1.0	5.0	3.0	13	7.9
300	29	32	2.0	3.0	P432_0200 EZ302U	95	95	270	20.00	20/1	4000	8000	0.41	5.0	3.0	12	6.0
300	37	43	2.6	2.3	P432_0200 EZ303U	130	130	270	20.00	20/1	4000	8000	0.52	5.0	3.0	12	6.5
300	44	53	3.1	1.9	P432_0200 EZ401U	130	140	270	20.00	20/1	4000	8000	1.0	5.0	3.0	12	7.9
300	67	93	4.7	1.3	P432_0200 EZ402U	130	140	270	20.00	20/1	4000	8000	1.7	5.0	3.0	12	9.0
375	23	26	2.4	3.5	P432_0160 EZ302U	76	76	260	16.00	16/1	4000	8000	0.42	5.0	3.0	12	6.0
375	30	34	3.2	2.6	P432_0160 EZ303U	110	110	260	16.00	16/1	4000	8000	0.53	5.0	3.0	12	6.5
375	35	43	3.7	2.3	P432_0160 EZ401U	130	130	260	16.00	16/1	4000	8000	1.1	5.0	3.0	12	7.9
375	53	74	5.7	1.5	P432_0160 EZ402U	130	130	260	16.00	16/1	4000	8000	1.8	5.0	3.0	12	9.0
500	10	11	2.6	4.9	P432_0120 EZ301U	32	32	200	12.00	12/1	3500	7000	0.34	5.0	3.0	11	5.4
500	17	19	4.4	2.9	P432_0120 EZ302U	57	57	200	12.00	12/1	3500	7000	0.44	5.0	3.0	11	6.0
500	22	26	5.8	2.2	P432_0120 EZ303U	80	80	200	12.00	12/1	3500	7000	0.55	5.0	3.0	11	6.5
500	26	32	6.8	1.9	P432_0120 EZ401U	97	97	200	12.00	12/1	3500	7000	1.1	5.0	3.0	11	7.9
500	40	56	10	1.3	P432_0120 EZ402U	100	100	200	12.00	12/1	3500	7000	1.8	5.0	3.0	11	9.0
600	22	27	0.9	2.1	P431_0100 EZ401U	82	82	230	10.00	10/1	4000	8000	0.98	4.0	2.0	9.1	6.5
600	33	43	1.4	1.4	P431_0100 EZ501U	120	120	230	10.00	10/1	4000	8000	2.9	4.0	2.0	9.1	7.5
600	34	48	1.4	1.4	P431_0100 EZ402U	120	120	230	10.00	10/1	4000	8000	1.7	4.0	2.0	9.1	7.6
750	18	22	1.0	3.1	P431_0080 EZ401U	66	66	240	8.000	8/1	4000	8000	1.0	4.0	2.0	9.8	6.5
750	26	34	1.5	2.1	P431_0080 EZ501U	120	120	240	8.000	8/1	4000	8000	3.0	4.0	2.0	9.8	7.5
750	27	38	1.6	2.0	P431_0080 EZ402U	120	120	240	8.000	8/1	4000	8000	1.7	4.0	2.0	9.8	7.6
750	40	61	2.3	1.4	P431_0080 EZ502U	120	130	240	8.000	8/1	4000	8000	5.3	4.0	2.0	9.8	9.0
750	45	65	2.6	1.2	P431_0080 EZ404U	120	130	240	8.000	8/1	4000	8000	3.0	4.0	2.0	9.8	9.7
750	48	82	2.8	1.2	P431_0080 EZ503U	120	130	240	8.000	8/1	4000	8000	7.6	4.0	2.0	9.8	10
857	16	19	1.1	3.8	P431_0070 EZ401U	58	58	270	7.000	7/1	4000	8000	1.0	4.0	2.0	11	6.5
857	23	30	1.7	2.6	P431_0070 EZ501U	110	110	270	7.000	7/1	4000	8000	3.0	4.0	2.0	11	7.5
857	24	33	1.7	2.5	P431_0070 EZ402U	110	110	270	7.000	7/1	4000	8000	1.7	4.0	2.0	11	7.6
857	35	53	2.6	1.7	P431_0070 EZ502U	140	140	270	7.000	7/1	4000	8000	5.3	4.0	2.0	11	9.0
857	39	57	2.9	1.5	P431_0070 EZ404U	140	140	270	7.000	7/1	4000	8000	3.1	4.0	2.0	11	9.7
857	42	72	3.1	1.4	P431_0070 EZ503U	140	140	270	7.000	7/1	4000	8000	7.7	4.0	2.0	11	10
1200	16	21	2.5	3.6	P431_0050 EZ501U	78	78	280	5.000	5/1	3700	7000	3.1	4.0	2.0	13	7.5
1200	17	24	2.6	3.5	P431_0050 EZ402U	78	78	280	5.000	5/1	3700	7000	1.8	4.0	2.0	13	7.6
1200	25	38	3.9	2.3	P431_0050 EZ502U	140	150	280	5.000	5/1	3700	7000	5.4	4.0	2.0	13	9.0
1200	28	41	4.3	2.1	P431_0050 EZ404U	140	140	280	5.000	5/1	3700	7000	3.2	4.0	2.0	13	9.7
1200	30	51	4.6	2.0	P431_0050 EZ503U	140	150	280	5.000	5/1	3700	7000	7.8	4.0	2.0	13	10
1500	13	17	3.3	4.5	P431_0040 EZ501U	62	62	240	4.000	4/1	3300	6500	3.3	4.0	2.0	13	7.5
1500	14	19	3.4	4.3	P431_0040 EZ402U	62	62	240	4.000	4/1	3300	6500	2.0	4.0	2.0	13	7.6
1500	20	30	5.1	2.9	P431_0040 EZ502U	120	120	240	4.000	4/1	3300	6500	5.6	4.0	2.0	13	9.0
1500	23	33	5.6	2.6	P431_0040 EZ404U	110	110	240	4.000	4/1	3300	6500	3.3	4.0	2.0	13	9.7
1500	24	41	6.0	2.5	P431_0040 EZ503U	120	130	240	4.000	4/1	3300	6500	7.9	4.0	2.0	13	10
2000	9.9	13	7.9	3.5	P431_0030 EZ501U	47	47	200	3.000	3/1	3000	6000	3.7	4.0	2.0	13	7.5
2000	10	14	8.2	3.4	P431_0030 EZ402U	47	47	200	3.000	3/1	3000	6000	2.4	4.0	2.0	13	7.6
2000	15	23	12	2.3	P431_0030 EZ502U	90	90	200	3.000	3/1	3000	6000	6.0	4.0	2.0	13	9.0
2000	17	24	14	2.1	P431_0030 EZ404U	84	84	200	3.000	3/1	3000	6000	3.8	4.0	2.0	13	9.7
2000	18	31	14	1.9	P431_0030 EZ503U	100	100	200	3.000	3/1	3000	6000	8.4	4.0	2.0	13	10
P5 (n_{1N} = 3000 rpm, $M_{2acc,max}$ = 360 Nm)																	
43	186	200	0.7	1.4	P532_0700 EZ401U	350	360	690	70.00	70/1	4200	8000	0.98	4.0	2.0	30	11
54	149	160	1.0	1.5	P532_0560 EZ401U	290	290	580	56.00	56/1	4000	8000	1.0	4.0	2.0	25	11
60	133	143	0.9	1.9	P532_0500 EZ401U	350	350	700	50.00	50/1	4000	8000	0.99	4.0	2.0	32	11

n_{2N} [rpm]	M_{2N} [Nm]	$M_{2,0}$ [Nm]	a_{th}	S	Type	M_{2acc} [Nm]	M_{2accHT} [Nm]	M_{2NOT} [Nm]	i	i_{exakt}	n_{1maxDB} [rpm]	n_{1maxZB} [rpm]	J_1 [kgcm²]	$\Delta\varphi_2$ [arcmin]	$\Delta\varphi_{2red}$ [arcmin]	C_2 [Nm/ arcmin]	m [kg]
P5 (n_{1N} = 3000 rpm, $M_{2acc,max}$ = 360 Nm)																	
60	204	223	1.4	1.2	P532_0500 EZ501U	350	350	700	50.00	50/1	4000	8000	3.0	4.0	2.0	32	12
60	223	247	1.5	1.1	P532_0500 EZ402U	350	350	700	50.00	50/1	4000	8000	1.7	4.0	2.0	32	12
75	106	114	1.2	1.9	P532_0400 EZ401U	300	300	600	40.00	40/1	4000	8000	0.99	4.0	2.0	31	11
75	163	179	1.9	1.2	P532_0400 EZ501U	300	300	600	40.00	40/1	4000	8000	3.0	4.0	2.0	31	12
75	179	198	2.1	1.1	P532_0400 EZ402U	300	300	600	40.00	40/1	4000	8000	1.7	4.0	2.0	31	12
86	93	100	1.0	2.8	P532_0350 EZ401U	280	280	700	35.00	35/1	4000	8000	1.0	4.0	2.0	33	11
86	143	156	1.6	1.9	P532_0350 EZ501U	350	350	700	35.00	35/1	4000	8000	3.0	4.0	2.0	33	12
86	156	173	1.7	1.7	P532_0350 EZ402U	350	350	700	35.00	35/1	4000	8000	1.7	4.0	2.0	33	12
86	246	266	2.7	1.1	P532_0350 EZ502U	350	350	700	35.00	35/1	4000	8000	5.3	4.0	2.0	33	13
94	85	91	1.2	2.8	P532_0320 EZ401U	260	260	620	32.00	32/1	3500	7000	1.2	4.0	2.0	25	11
94	131	143	1.8	1.8	P532_0320 EZ501U	310	360	620	32.00	32/1	3500	7000	3.2	4.0	2.0	25	12
94	143	158	2.0	1.7	P532_0320 EZ402U	310	360	620	32.00	32/1	3500	7000	1.9	4.0	2.0	25	12
107	74	80	1.3	3.1	P532_0280 EZ401U	230	230	600	28.00	28/1	4000	8000	1.0	4.0	2.0	32	11
107	114	125	2.0	2.0	P532_0280 EZ501U	300	300	600	28.00	28/1	4000	8000	3.0	4.0	2.0	32	12
107	125	138	2.2	1.8	P532_0280 EZ402U	300	300	600	28.00	28/1	4000	8000	1.7	4.0	2.0	32	12
107	184	229	3.2	1.3	P532_0280 EZ404U	300	300	600	28.00	28/1	4000	8000	3.1	4.0	2.0	32	14
107	197	213	3.5	1.2	P532_0280 EZ502U	300	300	600	28.00	28/1	4000	8000	5.3	4.0	2.0	32	13
120	67	71	1.2	3.9	P532_0250 EZ401U	200	200	710	25.00	25/1	3700	7000	1.1	4.0	2.0	33	11
120	102	112	1.9	2.5	P532_0250 EZ501U	360	360	710	25.00	25/1	3700	7000	3.1	4.0	2.0	33	12
120	112	124	2.1	2.3	P532_0250 EZ402U	360	360	710	25.00	25/1	3700	7000	1.8	4.0	2.0	33	12
120	164	204	3.0	1.6	P532_0250 EZ404U	360	360	710	25.00	25/1	3700	7000	3.2	4.0	2.0	33	14
120	176	190	3.2	1.5	P532_0250 EZ502U	360	360	710	25.00	25/1	3700	7000	5.4	4.0	2.0	33	13
120	230	264	4.3	1.1	P532_0250 EZ503U	360	360	710	25.00	25/1	3700	7000	7.8	4.0	2.0	33	15
150	53	57	1.4	4.7	P532_0200 EZ401U	160	160	710	20.00	20/1	3500	7000	1.2	4.0	2.0	33	11
150	82	89	2.2	3.1	P532_0200 EZ501U	300	300	710	20.00	20/1	3500	7000	3.2	4.0	2.0	33	12
150	89	99	2.4	2.8	P532_0200 EZ402U	300	300	710	20.00	20/1	3500	7000	1.9	4.0	2.0	33	12
150	131	163	3.5	1.9	P532_0200 EZ404U	360	360	710	20.00	20/1	3500	7000	3.3	4.0	2.0	33	14
150	141	152	3.8	1.8	P532_0200 EZ502U	360	360	710	20.00	20/1	3500	7000	5.5	4.0	2.0	33	13
150	184	211	4.9	1.4	P532_0200 EZ503U	360	360	710	20.00	20/1	3500	7000	7.9	4.0	2.0	33	15
188	65	71	2.8	3.4	P532_0160 EZ501U	240	240	600	16.00	16/1	3500	7000	3.2	4.0	2.0	33	12
188	71	79	3.0	3.1	P532_0160 EZ402U	240	240	600	16.00	16/1	3500	7000	2.0	4.0	2.0	33	12
188	105	131	4.5	2.1	P532_0160 EZ404U	300	300	600	16.00	16/1	3500	7000	3.3	4.0	2.0	33	14
188	112	122	4.8	2.0	P532_0160 EZ502U	300	300	600	16.00	16/1	3500	7000	5.5	4.0	2.0	33	13
188	147	169	6.3	1.5	P532_0160 EZ503U	300	300	600	16.00	16/1	3500	7000	7.9	4.0	2.0	33	15
250	32	34	3.8	3.8	P532_0120 EZ401U	97	97	400	12.00	12/1	3000	6000	1.4	4.0	2.0	31	11
250	49	54	5.9	2.4	P532_0120 EZ501U	180	180	400	12.00	12/1	3000	6000	3.3	4.0	2.0	31	12
250	54	59	6.4	2.2	P532_0120 EZ402U	180	180	400	12.00	12/1	3000	6000	2.1	4.0	2.0	31	12
250	79	98	9.5	1.5	P532_0120 EZ404U	200	200	400	12.00	12/1	3000	6000	3.4	4.0	2.0	31	14
250	84	91	10	1.4	P532_0120 EZ502U	200	200	400	12.00	12/1	3000	6000	5.6	4.0	2.0	31	13
250	111	127	13	1.1	P532_0120 EZ503U	200	200	400	12.00	12/1	3000	6000	8.0	4.0	2.0	31	15
300	42	46	1.6	3.4	P531_0100 EZ501U	160	160	580	10.00	10/1	3700	7000	3.1	3.0	1.0	26	9.4
300	72	78	2.7	2.0	P531_0100 EZ502U	290	290	580	10.00	10/1	3700	7000	5.4	3.0	1.0	26	11
300	72	81	2.7	2.0	P531_0100 EZ701U	190	190	580	10.00	10/1	3700	7000	8.7	3.0	1.0	26	13
300	94	108	3.5	1.5	P531_0100 EZ503U	290	290	580	10.00	10/1	3700	7000	7.8	3.0	1.0	26	12
300	116	140	4.4	1.2	P531_0100 EZ702U	290	290	580	10.00	10/1	3700	7000	14	3.0	1.0	26	15
300	131	155	4.9	1.1	P531_0100 EZ505U	290	290	580	10.00	10/1	3700	7000	12	3.0	1.0	26	15
375	57	62	2.9	3.0	P531_0080 EZ502U	240	240	590	8.000	8/1	3700	7000	5.5	3.0	1.0	25	11
375	57	64	2.9	3.0	P531_0080 EZ701U	160	160	590	8.000	8/1	3700	7000	8.8	3.0	1.0	25	13
375	75	86	3.8	2.3	P531_0080 EZ503U	300	300	590	8.000	8/1	3700	7000	7.8	3.0	1.0	25	12
375	93	112	4.7	1.9	P531_0080 EZ702U	300	300	590	8.000	8/1	3700	7000	14	3.0	1.0	25	15
375	105	124	5.3	1.7	P531_0080 EZ505U	300	300	590	8.000	8/1	3700	7000	12	3.0	1.0	25	15
375	128	161	6.4	1.4	P531_0080 EZ703U	300	300	590	8.000	8/1	3700	7000	22	3.0	1.0	25	17
429	50	54	3.2	3.7	P531_0070 EZ502U	210	210	670	7.000	7/1	3700	7000	5.5	3.0	1.0	31	11
429	50	56	3.2	3.7	P531_0070 EZ701U	140	140	670	7.000	7/1	3700	7000	8.8	3.0	1.0	31	13
429	66	75	4.2	2.8	P531_0070 EZ503U	290	290	670	7.000	7/1	3700	7000	7.9	3.0	1.0	31	12
429	81	98	5.2	2.3	P531_0070 EZ702U	280	280	670	7.000	7/1	3700	7000	14	3.0	1.0	31	15
429	92	109	5.9	2.0	P531_0070 EZ505U	330	380	670	7.000	7/1	3700	7000	12	3.0	1.0	31	15
429	112	141	7.2	1.6	P531_0070 EZ703U	330	380	670	7.000	7/1	3700	7000	22	3.0	1.0	31	17
429	145	205	9.3	1.3	P531_0070 EZ705U	330	380	670	7.000	7/1	3700	7000	34	3.0	1.0	31	23
600	47	54	6.3	3.9	P531_0050 EZ503U	210	210	570	5.000	5/1	3500	7000	8.3	3.0	1.0	35	12
600	58	70	7.8	3.2	P531_0050 EZ702U	200	200	700	5.000	5/1	3500	7000	14	3.0	1.0	35	15
600	65	78	8.8	2.8	P531_0050 EZ505U	320	320	570	5.000	5/1	3500	7000	13	3.0	1.0	35	15
600	80	101	11	2.3	P531_0050 EZ703U	320	320	700	5.000	5/1	3500	7000	22	3.0	1.0	35	17
600	103	146	14	1.8	P531_0050 EZ705U	350	390	700	5.000	5/1	3500	7000	35	3.0	1.0	35	23
750	38	43	8.3	4.9	P531_0040 EZ503U	170	170	460	4.000	4/1	3000	6000	8.8	3.0	1.0	35	12

n_{2N} [rpm]	M_{2N} [Nm]	$M_{2,0}$ [Nm]	a_{th}	S	Type	M_{2acc} [Nm]	M_{2accHT} [Nm]	M_{2NOT} [Nm]	i	i_{exakt}	n_{1maxDB} [rpm]	n_{1maxZB} [rpm]	J_1 [kgcm²]	$\Delta\varphi_2$ [arcmin]	$\Delta\varphi_{2red}$ [arcmin]	C_2 [Nm/ arcmin]	m [kg]
P5 (n_{1N} = 3000 rpm, $M_{2acc,max}$ = 360 Nm)																	
750	47	56	10	3.9	P531_0040 EZ702U	160	160	600	4.000	4/1	3000	6000	15	3.0	1.0	35	15
750	52	62	11	3.5	P531_0040 EZ505U	260	260	460	4.000	4/1	3000	6000	13	3.0	1.0	35	15
750	64	81	14	2.9	P531_0040 EZ703U	250	250	600	4.000	4/1	3000	6000	23	3.0	1.0	35	17
750	83	117	18	2.2	P531_0040 EZ705U	300	320	600	4.000	4/1	3000	6000	35	3.0	1.0	35	23
1000	22	23	16	4.9	P531_0030 EZ502U	90	90	340	3.000	3/1	2500	5000	8.0	3.0	1.0	35	11
1000	22	24	16	4.9	P531_0030 EZ701U	58	58	400	3.000	3/1	2500	5000	11	3.0	1.0	35	13
1000	28	32	20	3.7	P531_0030 EZ503U	130	130	340	3.000	3/1	2500	5000	10	3.0	1.0	35	12
1000	35	42	25	3.0	P531_0030 EZ702U	120	120	400	3.000	3/1	2500	5000	16	3.0	1.0	35	15
1000	39	47	28	2.7	P531_0030 EZ505U	190	190	340	3.000	3/1	2500	5000	15	3.0	1.0	35	15
1000	48	61	35	2.2	P531_0030 EZ703U	190	190	400	3.000	3/1	2500	5000	24	3.0	1.0	35	17
1000	62	88	45	1.7	P531_0030 EZ705U	200	200	400	3.000	3/1	2500	5000	37	3.0	1.0	35	23
P5 (n_{1N} = 4500 rpm, $M_{2acc,max}$ = 350 Nm)																	
450	92	148	4.0	1.4	P531_0100 EZ505U	290	290	580	10.00	10/1	3700	7000	12	3.0	1.0	26	15
450	117	194	5.0	1.1	P531_0100 EZ703U	290	290	580	10.00	10/1	3700	7000	22	3.0	1.0	26	17
563	74	119	4.2	2.1	P531_0080 EZ505U	300	300	590	8.000	8/1	3700	7000	12	3.0	1.0	25	15
563	94	155	5.4	1.6	P531_0080 EZ703U	300	300	590	8.000	8/1	3700	7000	22	3.0	1.0	25	17
643	65	104	4.7	2.5	P531_0070 EZ505U	330	380	670	7.000	7/1	3700	7000	12	3.0	1.0	31	15
643	82	136	6.0	2.0	P531_0070 EZ703U	330	380	670	7.000	7/1	3700	7000	22	3.0	1.0	31	17
643	111	204	8.2	1.4	P531_0070 EZ705U	330	380	670	7.000	7/1	3700	7000	34	3.0	1.0	31	23
900	46	74	7.1	3.5	P531_0050 EZ505U	320	320	570	5.000	5/1	3500	7000	13	3.0	1.0	35	15
900	59	97	9.0	2.7	P531_0050 EZ703U	320	320	700	5.000	5/1	3500	7000	22	3.0	1.0	35	17
900	80	146	12	2.0	P531_0050 EZ705U	350	390	700	5.000	5/1	3500	7000	35	3.0	1.0	35	23
1125	37	59	9.3	4.3	P531_0040 EZ505U	260	260	460	4.000	4/1	3000	6000	13	3.0	1.0	35	15
1125	47	78	12	3.4	P531_0040 EZ703U	250	250	600	4.000	4/1	3000	6000	23	3.0	1.0	35	17
1125	64	116	16	2.5	P531_0040 EZ705U	300	320	600	4.000	4/1	3000	6000	35	3.0	1.0	35	23
1500	28	45	23	3.3	P531_0030 EZ505U	190	190	340	3.000	3/1	2500	5000	15	3.0	1.0	35	15
1500	35	58	29	2.6	P531_0030 EZ703U	190	190	400	3.000	3/1	2500	5000	24	3.0	1.0	35	17
1500	48	87	40	1.9	P531_0030 EZ705U	200	200	400	3.000	3/1	2500	5000	37	3.0	1.0	35	23
P5 (n_{1N} = 6000 rpm, $M_{2acc,max}$ = 360 Nm)																	
75	175	213	0.7	1.1	P532_0800 EZ401U	290	290	580	80.00	80/1	4200	8000	0.98	4.0	2.0	25	11
86	153	186	0.7	1.4	P532_0700 EZ401U	350	360	690	70.00	70/1	4200	8000	0.98	4.0	2.0	30	11
107	122	149	0.9	1.6	P532_0560 EZ401U	290	290	580	56.00	56/1	4000	8000	1.0	4.0	2.0	25	11
120	109	133	0.9	1.8	P532_0500 EZ401U	350	350	700	50.00	50/1	4000	8000	0.99	4.0	2.0	32	11
120	162	209	1.4	1.2	P532_0500 EZ501U	350	350	700	50.00	50/1	4000	8000	3.0	4.0	2.0	32	12
120	166	233	1.4	1.2	P532_0500 EZ402U	350	350	700	50.00	50/1	4000	8000	1.7	4.0	2.0	32	12
150	87	106	1.3	1.8	P532_0400 EZ401U	300	300	600	40.00	40/1	4000	8000	0.99	4.0	2.0	31	11
150	129	167	1.9	1.2	P532_0400 EZ501U	300	300	600	40.00	40/1	4000	8000	3.0	4.0	2.0	31	12
150	133	186	2.0	1.2	P532_0400 EZ402U	300	300	600	40.00	40/1	4000	8000	1.7	4.0	2.0	31	12
171	76	93	1.1	2.7	P532_0350 EZ401U	280	280	700	35.00	35/1	4000	8000	1.0	4.0	2.0	33	11
171	113	146	1.6	1.9	P532_0350 EZ501U	350	350	700	35.00	35/1	4000	8000	3.0	4.0	2.0	33	12
171	116	163	1.6	1.8	P532_0350 EZ402U	350	350	700	35.00	35/1	4000	8000	1.7	4.0	2.0	33	12
171	173	259	2.4	1.2	P532_0350 EZ502U	350	350	700	35.00	35/1	4000	8000	5.3	4.0	2.0	33	13
188	70	85	1.2	2.9	P532_0320 EZ401U	260	260	620	32.00	32/1	3500	7000	1.2	4.0	2.0	25	11
188	103	134	1.7	1.9	P532_0320 EZ501U	310	360	620	32.00	32/1	3500	7000	3.2	4.0	2.0	25	12
188	106	149	1.8	1.9	P532_0320 EZ402U	310	360	620	32.00	32/1	3500	7000	1.9	4.0	2.0	25	12
188	158	237	2.6	1.3	P532_0320 EZ502U	310	360	620	32.00	32/1	3500	7000	5.5	4.0	2.0	25	13
214	61	74	1.2	3.3	P532_0280 EZ401U	230	230	600	28.00	28/1	4000	8000	1.0	4.0	2.0	32	11
214	90	117	1.8	2.2	P532_0280 EZ501U	300	300	600	28.00	28/1	4000	8000	3.0	4.0	2.0	32	12
214	93	130	1.9	2.2	P532_0280 EZ402U	300	300	600	28.00	28/1	4000	8000	1.7	4.0	2.0	32	12
214	138	207	2.8	1.5	P532_0280 EZ502U	300	300	600	28.00	28/1	4000	8000	5.3	4.0	2.0	32	13
214	154	223	3.1	1.3	P532_0280 EZ404U	300	300	600	28.00	28/1	4000	8000	3.1	4.0	2.0	32	14
240	55	67	1.2	3.8	P532_0250 EZ401U	200	200	710	25.00	25/1	3700	7000	1.1	4.0	2.0	33	11
240	81	105	1.8	2.6	P532_0250 EZ501U	360	360	710	25.00	25/1	3700	7000	3.1	4.0	2.0	33	12
240	83	116	1.9	2.5	P532_0250 EZ402U	360	360	710	25.00	25/1	3700	7000	1.8	4.0	2.0	33	12
240	124	185	2.8	1.7	P532_0250 EZ502U	360	360	710	25.00	25/1	3700	7000	5.4	4.0	2.0	33	13
240	138	200	3.2	1.5	P532_0250 EZ404U	360	360	710	25.00	25/1	3700	7000	3.2	4.0	2.0	33	14
240	147	252	3.4	1.4	P532_0250 EZ503U	360	360	710	25.00	25/1	3700	7000	7.8	4.0	2.0	33	15
300	44	53	1.4	4.8	P532_0200 EZ401U	160	160	710	20.00	20/1	3500	7000	1.2	4.0	2.0	33	11
300	65	84	2.1	3.2	P532_0200 EZ501U	300	300	710	20.00	20/1	3500	7000	3.2	4.0	2.0	33	12
300	67	93	2.1	3.2	P532_0200 EZ402U	300	300	710	20.00	20/1	3500	7000	1.9	4.0	2.0	33	12
300	99	148	3.2	2.1	P532_0200 EZ502U	360	360	710	20.00	20/1	3500	7000	5.5	4.0	2.0	33	13
300	110	160	3.5	1.9	P532_0200 EZ404U	360	360	710	20.00	20/1	3500	7000	3.3	4.0	2.0	33	14
300	118	201	3.8	1.8	P532_0200 EZ503U	360	360	710	20.00	20/1	3500	7000	7.9	4.0	2.0	33	15
375	52	67	2.5	3.8	P532_0160 EZ501U	240	240	600	16.00	16/1	3500	7000	3.2	4.0	2.0	33	12
375	53	74	2.6	3.7	P532_0160 EZ402U	240	240	600	16.00	16/1	3500	7000	2.0	4.0	2.0	33	12

n_{2N} [rpm]	M_{2N} [Nm]	$M_{2,0}$ [Nm]	a_{th}	S	Type	M_{2acc} [Nm]	M_{2accHT} [Nm]	M_{2NOT} [Nm]	i	i_{exakt}	n_{1maxDB} [rpm]	n_{1maxZB} [rpm]	J_1 [kgcm²]	$\Delta\varphi_2$ [arcmin]	$\Delta\varphi_{2red}$ [arcmin]	C_2 [Nm/ arcmin]	m [kg]
P5 (n_{1N} = 6000 rpm, $M_{2acc,max}$ = 360 Nm)																	
375	79	119	3.8	2.5	P532_0160 EZ502U	300	300	600	16.00	16/1	3500	7000	5.5	4.0	2.0	33	13
375	88	128	4.2	2.2	P532_0160 EZ404U	300	300	600	16.00	16/1	3500	7000	3.3	4.0	2.0	33	14
375	94	161	4.5	2.1	P532_0160 EZ503U	300	300	600	16.00	16/1	3500	7000	7.9	4.0	2.0	33	15
500	26	32	3.5	4.1	P532_0120 EZ401U	97	97	400	12.00	12/1	3000	6000	1.4	4.0	2.0	31	11
500	39	50	5.2	2.8	P532_0120 EZ501U	180	180	400	12.00	12/1	3000	6000	3.3	4.0	2.0	31	12
500	40	56	5.4	2.7	P532_0120 EZ402U	180	180	400	12.00	12/1	3000	6000	2.1	4.0	2.0	31	12
500	59	89	8.0	1.8	P532_0120 EZ502U	200	200	400	12.00	12/1	3000	6000	5.6	4.0	2.0	31	13
500	66	96	8.9	1.6	P532_0120 EZ404U	200	200	400	12.00	12/1	3000	6000	3.4	4.0	2.0	31	14
500	71	121	9.5	1.5	P532_0120 EZ503U	200	200	400	12.00	12/1	3000	6000	8.0	4.0	2.0	31	15
600	33	43	1.6	3.4	P531_0100 EZ501U	160	160	580	10.00	10/1	3700	7000	3.1	3.0	1.0	26	9.4
600	50	76	2.4	2.2	P531_0100 EZ502U	290	290	580	10.00	10/1	3700	7000	5.4	3.0	1.0	26	11
600	50	77	2.4	2.2	P531_0100 EZ701U	190	190	580	10.00	10/1	3700	7000	8.7	3.0	1.0	26	13
600	60	103	2.8	1.9	P531_0100 EZ503U	290	290	580	10.00	10/1	3700	7000	7.8	3.0	1.0	26	12
600	70	139	3.3	1.6	P531_0100 EZ702U	290	290	580	10.00	10/1	3700	7000	14	3.0	1.0	26	15
750	40	61	2.5	3.4	P531_0080 EZ502U	240	240	590	8.000	8/1	3700	7000	5.5	3.0	1.0	25	11
750	40	61	2.5	3.4	P531_0080 EZ701U	160	160	590	8.000	8/1	3700	7000	8.8	3.0	1.0	25	13
750	48	82	3.0	2.9	P531_0080 EZ503U	300	300	590	8.000	8/1	3700	7000	7.8	3.0	1.0	25	12
750	56	111	3.5	2.5	P531_0080 EZ702U	300	300	590	8.000	8/1	3700	7000	14	3.0	1.0	25	15
857	35	53	2.9	4.1	P531_0070 EZ502U	210	210	670	7.000	7/1	3700	7000	5.5	3.0	1.0	31	11
857	35	54	2.9	4.1	P531_0070 EZ701U	140	140	670	7.000	7/1	3700	7000	8.8	3.0	1.0	31	13
857	42	72	3.4	3.5	P531_0070 EZ503U	290	290	670	7.000	7/1	3700	7000	7.9	3.0	1.0	31	12
857	49	97	3.9	3.0	P531_0070 EZ702U	280	280	670	7.000	7/1	3700	7000	14	3.0	1.0	31	15
1200	30	51	5.1	4.8	P531_0050 EZ503U	210	210	570	5.000	5/1	3500	7000	8.3	3.0	1.0	35	12
1200	35	69	5.9	4.2	P531_0050 EZ702U	200	200	700	5.000	5/1	3500	7000	14	3.0	1.0	35	15
P7 (n_{1N} = 2000 rpm, $M_{2acc,max}$ = 810 Nm)																	
250	339	513	8.9	1.2	P731_0080 EZ805U	670	700	1340	8.000	8/1	3000	6000	134	3.0	1.0	58	56
286	297	449	9.5	1.5	P731_0070 EZ805U	810	840	1610	7.000	7/1	3000	6000	134	3.0	1.0	61	56
400	212	321	14	2.1	P731_0050 EZ805U	810	840	1610	5.000	5/1	2700	5500	135	3.0	1.0	67	56
500	170	256	19	2.6	P731_0040 EZ805U	700	730	1400	4.000	4/1	2500	5000	137	3.0	1.0	69	56
667	127	192	41	2.2	P731_0030 EZ805U	500	500	1000	3.000	3/1	2200	4000	142	3.0	1.0	68	56
P7 (n_{1N} = 3000 rpm, $M_{2acc,max}$ = 810 Nm)																	
38	327	357	0.7	1.5	P732_0800 EZ501U	620	620	1240	80.00	80/1	3700	7000	3.0	4.0	2.0	57	19
43	286	313	0.6	1.9	P732_0700 EZ501U	760	800	1520	70.00	70/1	3700	7000	3.0	4.0	2.0	60	19
43	492	532	1.1	1.1	P732_0700 EZ502U	760	800	1520	70.00	70/1	3700	7000	5.3	4.0	2.0	60	20
43	492	552	1.1	1.1	P732_0700 EZ701U	760	800	1520	70.00	70/1	3700	7000	8.6	4.0	2.0	60	22
54	229	250	0.8	2.2	P732_0560 EZ501U	650	650	1300	56.00	56/1	3700	7000	3.3	4.0	2.0	57	19
54	394	426	1.4	1.3	P732_0560 EZ502U	650	650	1300	56.00	56/1	3700	7000	5.6	4.0	2.0	57	20
54	394	442	1.4	1.3	P732_0560 EZ701U	650	650	1300	56.00	56/1	3700	7000	8.9	4.0	2.0	57	22
60	204	223	0.8	2.7	P732_0500 EZ501U	760	760	1540	50.00	50/1	3700	7000	3.1	4.0	2.0	63	19
60	352	380	1.3	1.6	P732_0500 EZ502U	770	810	1540	50.00	50/1	3700	7000	5.4	4.0	2.0	63	20
60	352	394	1.3	1.6	P732_0500 EZ701U	770	810	1540	50.00	50/1	3700	7000	8.7	4.0	2.0	63	22
60	461	527	1.7	1.2	P732_0500 EZ503U	770	810	1540	50.00	50/1	3700	7000	7.7	4.0	2.0	63	22
75	163	179	1.0	2.8	P732_0400 EZ501U	610	610	1400	40.00	40/1	3700	7000	3.1	4.0	2.0	63	19
75	281	304	1.8	1.6	P732_0400 EZ502U	700	700	1400	40.00	40/1	3700	7000	5.4	4.0	2.0	63	20
75	281	315	1.8	1.6	P732_0400 EZ701U	700	700	1400	40.00	40/1	3700	7000	8.7	4.0	2.0	63	22
75	369	422	2.3	1.2	P732_0400 EZ503U	700	700	1400	40.00	40/1	3700	7000	7.8	4.0	2.0	63	22
86	143	156	0.9	3.8	P732_0350 EZ501U	530	530	1540	35.00	35/1	3700	7000	3.3	4.0	2.0	64	19
86	246	266	1.6	2.2	P732_0350 EZ502U	770	810	1540	35.00	35/1	3700	7000	5.6	4.0	2.0	64	20
86	246	276	1.6	2.2	P732_0350 EZ701U	670	670	1540	35.00	35/1	3700	7000	8.9	4.0	2.0	64	22
86	323	369	2.1	1.7	P732_0350 EZ503U	770	810	1540	35.00	35/1	3700	7000	8.0	4.0	2.0	64	22
86	399	479	2.6	1.4	P732_0350 EZ702U	770	810	1540	35.00	35/1	3700	7000	14	4.0	2.0	64	24
86	449	532	2.9	1.2	P732_0350 EZ505U	770	810	1540	35.00	35/1	3700	7000	13	4.0	2.0	64	25
94	131	143	1.1	3.6	P732_0320 EZ501U	490	490	1460	32.00	32/1	3000	6000	3.9	4.0	2.0	57	19
94	225	243	1.9	2.1	P732_0320 EZ502U	730	730	1460	32.00	32/1	3000	6000	6.2	4.0	2.0	57	20
94	225	252	1.9	2.1	P732_0320 EZ701U	610	610	1460	32.00	32/1	3000	6000	9.5	4.0	2.0	57	22
94	295	337	2.5	1.6	P732_0320 EZ503U	730	730	1460	32.00	32/1	3000	6000	8.6	4.0	2.0	57	22
94	365	438	3.1	1.3	P732_0320 EZ702U	730	730	1460	32.00	32/1	3000	6000	15	4.0	2.0	57	24
94	410	486	3.5	1.1	P732_0320 EZ505U	730	730	1460	32.00	32/1	3000	6000	13	4.0	2.0	57	25
107	114	125	1.0	4.7	P732_0280 EZ501U	430	430	1400	28.00	28/1	3700	7000	3.3	4.0	2.0	64	19
107	197	213	1.8	2.7	P732_0280 EZ502U	700	700	1400	28.00	28/1	3700	7000	5.6	4.0	2.0	64	20
107	197	221	1.8	2.7	P732_0280 EZ701U	530	530	1400	28.00	28/1	3700	7000	8.9	4.0	2.0	64	22
107	258	295	2.3	2.1	P732_0280 EZ503U	700	700	1400	28.00	28/1	3700	7000	8.0	4.0	2.0	64	22
107	319	383	2.9	1.7	P732_0280 EZ702U	700	700	1400	28.00	28/1	3700	7000	14	4.0	2.0	64	24
107	359	426	3.2	1.5	P732_0280 EZ505U	700	700	1400	28.00	28/1	3700	7000	13	4.0	2.0	64	25
120	102	112	1.2	4.9	P732_0250 EZ501U	380	380	1610	25.00	25/1	3500	7000	3.6	4.0	2.0	64	19

n_{2N} [rpm]	M_{2N} [Nm]	$M_{2,0}$ [Nm]	a_{th}	S	Type	M_{2acc} [Nm]	M_{2accHT} [Nm]	M_{2NOT} [Nm]	i	i_{exakt}	n_{1maxDB} [rpm]	n_{1maxZB} [rpm]	J_1 [kgcm²]	$\Delta\varphi_2$ [arcmin]	$\Delta\varphi_{2red}$ [arcmin]	C_2 [Nm/ arcmin]	m [kg]
P7 (n_{1N} = 3000 rpm, $M_{2acc,max}$ = 810 Nm)																	
120	176	190	2.0	2.8	P732_0250 EZ502U	740	740	1610	25.00	25/1	3500	7000	5.9	4.0	2.0	64	20
120	176	197	2.0	2.8	P732_0250 EZ701U	480	480	1610	25.00	25/1	3500	7000	9.2	4.0	2.0	64	22
120	230	264	2.7	2.2	P732_0250 EZ503U	810	810	1610	25.00	25/1	3500	7000	8.3	4.0	2.0	64	22
120	285	342	3.3	1.8	P732_0250 EZ702U	810	810	1610	25.00	25/1	3500	7000	14	4.0	2.0	64	24
120	321	380	3.7	1.6	P732_0250 EZ505U	810	810	1610	25.00	25/1	3500	7000	13	4.0	2.0	64	25
120	392	494	4.5	1.3	P732_0250 EZ703U	810	810	1610	25.00	25/1	3500	7000	22	4.0	2.0	64	26
150	141	152	2.5	3.3	P732_0200 EZ502U	590	590	1610	20.00	20/1	3000	6000	6.3	4.0	2.0	64	20
150	141	158	2.5	3.3	P732_0200 EZ701U	380	380	1610	20.00	20/1	3000	6000	9.6	4.0	2.0	64	22
150	184	211	3.2	2.5	P732_0200 EZ503U	810	810	1610	20.00	20/1	3000	6000	8.7	4.0	2.0	64	22
150	228	274	4.0	2.0	P732_0200 EZ702U	780	780	1610	20.00	20/1	3000	6000	15	4.0	2.0	64	24
150	257	304	4.5	1.8	P732_0200 EZ505U	810	810	1610	20.00	20/1	3000	6000	13	4.0	2.0	64	25
150	314	395	5.5	1.5	P732_0200 EZ703U	810	810	1610	20.00	20/1	3000	6000	23	4.0	2.0	64	26
150	405	574	7.1	1.1	P732_0200 EZ705U	810	810	1610	20.00	20/1	3000	6000	35	4.0	2.0	64	32
188	112	122	2.8	4.0	P732_0160 EZ502U	470	470	1400	16.00	16/1	3000	6000	6.4	4.0	2.0	65	20
188	112	126	2.8	4.0	P732_0160 EZ701U	300	300	1400	16.00	16/1	3000	6000	9.7	4.0	2.0	65	22
188	147	169	3.7	3.1	P732_0160 EZ503U	650	650	1400	16.00	16/1	3000	6000	8.8	4.0	2.0	65	22
188	182	219	4.6	2.5	P732_0160 EZ702U	620	620	1400	16.00	16/1	3000	6000	15	4.0	2.0	65	24
188	205	243	5.1	2.2	P732_0160 EZ505U	700	700	1400	16.00	16/1	3000	6000	13	4.0	2.0	65	25
188	251	316	6.3	1.8	P732_0160 EZ703U	700	700	1400	16.00	16/1	3000	6000	23	4.0	2.0	65	26
188	324	459	8.1	1.4	P732_0160 EZ705U	700	700	1400	16.00	16/1	3000	6000	35	4.0	2.0	65	32
250	84	91	5.0	3.5	P732_0120 EZ502U	350	350	1000	12.00	12/1	2500	5000	6.7	4.0	2.0	62	20
250	84	95	5.0	3.5	P732_0120 EZ701U	230	230	1000	12.00	12/1	2500	5000	10	4.0	2.0	62	22
250	111	127	6.5	2.7	P732_0120 EZ503U	490	490	1000	12.00	12/1	2500	5000	9.1	4.0	2.0	62	22
250	137	164	8.0	2.2	P732_0120 EZ702U	470	470	1000	12.00	12/1	2500	5000	15	4.0	2.0	62	24
250	154	182	9.0	1.9	P732_0120 EZ505U	500	500	1000	12.00	12/1	2500	5000	14	4.0	2.0	62	25
250	188	237	11	1.6	P732_0120 EZ703U	500	500	1000	12.00	12/1	2500	5000	23	4.0	2.0	62	26
250	243	344	14	1.2	P732_0120 EZ705U	500	500	1000	12.00	12/1	2500	5000	36	4.0	2.0	62	32
300	72	81	1.7	3.9	P731_0100 EZ701U	190	190	1150	10.00	10/1	3000	6000	9.1	3.0	1.0	55	19
300	116	140	2.7	2.4	P731_0100 EZ702U	400	400	1150	10.00	10/1	3000	6000	14	3.0	1.0	55	21
300	160	202	3.7	1.7	P731_0100 EZ703U	580	580	1150	10.00	10/1	3000	6000	22	3.0	1.0	55	23
300	207	293	4.8	1.3	P731_0100 EZ705U	580	580	1150	10.00	10/1	3000	6000	35	3.0	1.0	55	29
300	216	360	5.0	1.3	P731_0100 EZ802U	580	580	1150	10.00	10/1	3000	6000	59	3.0	1.0	55	37
375	93	112	2.8	3.8	P731_0080 EZ702U	320	320	1340	8.000	8/1	3000	6000	15	3.0	1.0	58	21
375	128	161	3.9	2.7	P731_0080 EZ703U	500	500	1340	8.000	8/1	3000	6000	23	3.0	1.0	58	23
375	165	234	5.0	2.1	P731_0080 EZ705U	670	700	1340	8.000	8/1	3000	6000	35	3.0	1.0	58	29
375	173	288	5.2	2.0	P731_0080 EZ802U	670	700	1340	8.000	8/1	3000	6000	59	3.0	1.0	58	37
375	206	374	6.2	1.7	P731_0080 EZ803U	670	700	1340	8.000	8/1	3000	6000	84	3.0	1.0	58	43
429	81	98	3.0	4.7	P731_0070 EZ702U	280	280	1560	7.000	7/1	3000	6000	15	3.0	1.0	61	21
429	112	141	4.1	3.4	P731_0070 EZ703U	440	440	1560	7.000	7/1	3000	6000	23	3.0	1.0	61	23
429	145	205	5.3	2.7	P731_0070 EZ705U	710	710	1560	7.000	7/1	3000	6000	35	3.0	1.0	61	29
429	151	252	5.6	2.5	P731_0070 EZ802U	680	680	1610	7.000	7/1	3000	6000	59	3.0	1.0	61	37
429	181	327	6.6	2.1	P731_0070 EZ803U	810	840	1610	7.000	7/1	3000	6000	85	3.0	1.0	61	43
600	80	101	6.2	4.8	P731_0050 EZ703U	320	320	1120	5.000	5/1	2700	5500	24	3.0	1.0	67	23
600	103	146	7.9	3.7	P731_0050 EZ705U	500	500	1120	5.000	5/1	2700	5500	36	3.0	1.0	67	29
600	108	180	8.3	3.6	P731_0050 EZ802U	490	490	1610	5.000	5/1	2700	5500	60	3.0	1.0	67	37
600	129	234	9.9	3.0	P731_0050 EZ803U	700	700	1610	5.000	5/1	2700	5500	86	3.0	1.0	67	43
750	83	117	10	4.7	P731_0040 EZ705U	400	400	900	4.000	4/1	2500	5000	38	3.0	1.0	69	29
750	87	144	11	4.4	P731_0040 EZ802U	390	390	1400	4.000	4/1	2500	5000	62	3.0	1.0	69	37
750	103	187	13	3.7	P731_0040 EZ803U	560	560	1400	4.000	4/1	2500	5000	88	3.0	1.0	69	43
1000	62	88	23	3.9	P731_0030 EZ705U	300	300	680	3.000	3/1	2200	4000	43	3.0	1.0	68	29
1000	65	108	24	3.8	P731_0030 EZ802U	290	290	1000	3.000	3/1	2200	4000	67	3.0	1.0	68	37
1000	77	140	29	3.2	P731_0030 EZ803U	420	420	1000	3.000	3/1	2200	4000	93	3.0	1.0	68	43
P7 (n_{1N} = 4500 rpm, $M_{2acc,max}$ = 810 Nm)																	
129	316	509	2.3	1.5	P732_0350 EZ505U	770	810	1540	35.00	35/1	3700	7000	13	4.0	2.0	64	25
141	289	465	2.7	1.5	P732_0320 EZ505U	730	730	1460	32.00	32/1	3000	6000	13	4.0	2.0	57	25
161	253	407	2.5	1.9	P732_0280 EZ505U	700	700	1400	28.00	28/1	3700	7000	13	4.0	2.0	64	25
161	322	532	3.2	1.5	P732_0280 EZ703U	700	700	1400	28.00	28/1	3700	7000	22	4.0	2.0	64	26
180	226	363	2.8	2.0	P732_0250 EZ505U	810	810	1610	25.00	25/1	3500	7000	13	4.0	2.0	64	25
180	287	475	3.6	1.6	P732_0250 EZ703U	810	810	1610	25.00	25/1	3500	7000	22	4.0	2.0	64	26
225	181	291	3.2	2.5	P732_0200 EZ505U	810	810	1610	20.00	20/1	3000	6000	13	4.0	2.0	64	25
225	230	380	4.1	2.0	P732_0200 EZ703U	810	810	1610	20.00	20/1	3000	6000	23	4.0	2.0	64	26
225	312	570	5.6	1.4	P732_0200 EZ705U	810	810	1610	20.00	20/1	3000	6000	35	4.0	2.0	64	32
281	144	233	3.6	3.1	P732_0160 EZ505U	700	700	1400	16.00	16/1	3000	6000	13	4.0	2.0	65	25
281	184	304	4.6	2.4	P732_0160 EZ703U	700	700	1400	16.00	16/1	3000	6000	23	4.0	2.0	65	26
281	249	456	6.2	1.8	P732_0160 EZ705U	700	700	1400	16.00	16/1	3000	6000	35	4.0	2.0	65	32

n_{2N} [rpm]	M_{2N} [Nm]	$M_{2,0}$ [Nm]	a_{th}	S	Type	M_{2acc} [Nm]	M_{2accHT} [Nm]	M_{2NOT} [Nm]	i	i_{exakt}	n_{1maxDB} [rpm]	n_{1maxZB} [rpm]	J_1 [kgcm²]	$\Delta\varphi_2$ [arcmin]	$\Delta\varphi_{2red}$ [arcmin]	C_2 [Nm/ arcmin]	m [kg]
P7 (n_{1N} = 4500 rpm, $M_{2acc,max}$ = 810 Nm)																	
375	108	174	6.6	2.6	P732_0120 EZ505U	500	500	1000	12.00	12/1	2500	5000	14	4.0	2.0	62	25
375	138	228	8.4	2.1	P732_0120 EZ703U	500	500	1000	12.00	12/1	2500	5000	23	4.0	2.0	62	26
375	187	342	11	1.5	P732_0120 EZ705U	500	500	1000	12.00	12/1	2500	5000	36	4.0	2.0	62	32
450	102	335	2.7	2.4	P731_0100 EZ802U	580	580	1150	10.00	10/1	3000	6000	59	3.0	1.0	55	37
450	117	194	3.1	2.1	P731_0100 EZ703U	580	580	1150	10.00	10/1	3000	6000	22	3.0	1.0	55	23
450	159	291	4.2	1.5	P731_0100 EZ705U	580	580	1150	10.00	10/1	3000	6000	35	3.0	1.0	55	29
563	81	268	2.8	3.7	P731_0080 EZ802U	670	700	1340	8.000	8/1	3000	6000	59	3.0	1.0	58	37
563	94	155	3.2	3.3	P731_0080 EZ703U	500	500	1340	8.000	8/1	3000	6000	23	3.0	1.0	58	23
563	127	233	4.4	2.4	P731_0080 EZ705U	670	700	1340	8.000	8/1	3000	6000	35	3.0	1.0	58	29
643	71	234	3.0	4.7	P731_0070 EZ802U	680	680	1610	7.000	7/1	3000	6000	59	3.0	1.0	61	37
643	82	136	3.5	4.1	P731_0070 EZ703U	440	440	1560	7.000	7/1	3000	6000	23	3.0	1.0	61	23
643	111	204	4.7	3.0	P731_0070 EZ705U	710	710	1560	7.000	7/1	3000	6000	35	3.0	1.0	61	29
900	80	146	7.0	4.2	P731_0050 EZ705U	500	500	1120	5.000	5/1	2700	5500	36	3.0	1.0	67	29
P7 (n_{1N} = 6000 rpm, $M_{2acc,max}$ = 810 Nm)																	
75	258	334	0.7	1.5	P732_0800 EZ501U	620	620	1240	80.00	80/1	3700	7000	3.0	4.0	2.0	57	19
86	226	293	0.6	1.9	P732_0700 EZ501U	760	800	1520	70.00	70/1	3700	7000	3.0	4.0	2.0	60	19
86	346	519	1.0	1.3	P732_0700 EZ502U	760	800	1520	70.00	70/1	3700	7000	5.3	4.0	2.0	60	20
86	346	525	1.0	1.3	P732_0700 EZ701U	760	800	1520	70.00	70/1	3700	7000	8.6	4.0	2.0	60	22
107	181	234	0.8	2.2	P732_0560 EZ501U	650	650	1300	56.00	56/1	3700	7000	3.3	4.0	2.0	57	19
107	277	415	1.2	1.4	P732_0560 EZ502U	650	650	1300	56.00	56/1	3700	7000	5.6	4.0	2.0	57	20
107	277	420	1.2	1.4	P732_0560 EZ701U	650	650	1300	56.00	56/1	3700	7000	8.9	4.0	2.0	57	22
120	162	209	0.7	2.7	P732_0500 EZ501U	760	760	1540	50.00	50/1	3700	7000	3.1	4.0	2.0	63	19
120	247	371	1.1	1.8	P732_0500 EZ502U	770	810	1540	50.00	50/1	3700	7000	5.4	4.0	2.0	63	20
120	247	375	1.1	1.8	P732_0500 EZ701U	770	810	1540	50.00	50/1	3700	7000	8.7	4.0	2.0	63	22
120	295	504	1.4	1.5	P732_0500 EZ503U	770	810	1540	50.00	50/1	3700	7000	7.7	4.0	2.0	63	22
150	129	167	1.0	2.9	P732_0400 EZ501U	610	610	1400	40.00	40/1	3700	7000	3.1	4.0	2.0	63	19
150	198	296	1.5	1.9	P732_0400 EZ502U	700	700	1400	40.00	40/1	3700	7000	5.4	4.0	2.0	63	20
150	198	300	1.5	1.9	P732_0400 EZ701U	700	700	1400	40.00	40/1	3700	7000	8.7	4.0	2.0	63	22
150	236	403	1.8	1.6	P732_0400 EZ503U	700	700	1400	40.00	40/1	3700	7000	7.8	4.0	2.0	63	22
171	113	146	0.9	3.9	P732_0350 EZ501U	530	530	1540	35.00	35/1	3700	7000	3.3	4.0	2.0	64	19
171	173	259	1.4	2.5	P732_0350 EZ502U	770	810	1540	35.00	35/1	3700	7000	5.6	4.0	2.0	64	20
171	173	263	1.4	2.5	P732_0350 EZ701U	670	670	1540	35.00	35/1	3700	7000	8.9	4.0	2.0	64	22
171	206	352	1.6	2.1	P732_0350 EZ503U	770	810	1540	35.00	35/1	3700	7000	8.0	4.0	2.0	64	22
171	239	475	1.9	1.8	P732_0350 EZ702U	770	810	1540	35.00	35/1	3700	7000	14	4.0	2.0	64	24
188	103	134	1.1	3.8	P732_0320 EZ501U	490	490	1460	32.00	32/1	3000	6000	3.9	4.0	2.0	57	19
188	158	237	1.6	2.5	P732_0320 EZ502U	730	730	1460	32.00	32/1	3000	6000	6.2	4.0	2.0	57	20
188	158	240	1.6	2.5	P732_0320 EZ701U	610	610	1460	32.00	32/1	3000	6000	9.5	4.0	2.0	57	22
188	188	322	1.9	2.1	P732_0320 EZ503U	730	730	1460	32.00	32/1	3000	6000	8.6	4.0	2.0	57	22
188	219	435	2.2	1.8	P732_0320 EZ702U	730	730	1460	32.00	32/1	3000	6000	15	4.0	2.0	57	24
214	90	117	1.0	4.9	P732_0280 EZ501U	430	430	1400	28.00	28/1	3700	7000	3.3	4.0	2.0	64	19
214	138	207	1.5	3.2	P732_0280 EZ502U	700	700	1400	28.00	28/1	3700	7000	5.6	4.0	2.0	64	20
214	138	210	1.5	3.2	P732_0280 EZ701U	530	530	1400	28.00	28/1	3700	7000	8.9	4.0	2.0	64	22
214	165	282	1.8	2.7	P732_0280 EZ503U	700	700	1400	28.00	28/1	3700	7000	8.0	4.0	2.0	64	22
214	192	380	2.1	2.3	P732_0280 EZ702U	700	700	1400	28.00	28/1	3700	7000	14	4.0	2.0	64	24
240	124	185	1.7	3.4	P732_0250 EZ502U	740	740	1610	25.00	25/1	3500	7000	5.9	4.0	2.0	64	20
240	124	188	1.7	3.4	P732_0250 EZ701U	480	480	1610	25.00	25/1	3500	7000	9.2	4.0	2.0	64	22
240	147	252	2.0	2.8	P732_0250 EZ503U	810	810	1610	25.00	25/1	3500	7000	8.3	4.0	2.0	64	22
240	171	340	2.4	2.4	P732_0250 EZ702U	810	810	1610	25.00	25/1	3500	7000	14	4.0	2.0	64	24
300	99	148	1.9	4.1	P732_0200 EZ502U	590	590	1610	20.00	20/1	3000	6000	6.3	4.0	2.0	64	20
300	99	150	1.9	4.1	P732_0200 EZ701U	380	380	1610	20.00	20/1	3000	6000	9.6	4.0	2.0	64	22
300	118	201	2.3	3.5	P732_0200 EZ503U	810	810	1610	20.00	20/1	3000	6000	8.7	4.0	2.0	64	22
300	137	272	2.7	3.0	P732_0200 EZ702U	780	780	1610	20.00	20/1	3000	6000	15	4.0	2.0	64	24
375	94	161	2.6	4.3	P732_0160 EZ503U	650	650	1400	16.00	16/1	3000	6000	8.8	4.0	2.0	65	22
375	109	217	3.0	3.7	P732_0160 EZ702U	620	620	1400	16.00	16/1	3000	6000	15	4.0	2.0	65	24
600	50	77	1.5	4.4	P731_0100 EZ701U	190	190	1150	10.00	10/1	3000	6000	9.1	3.0	1.0	55	19
600	70	139	2.0	3.2	P731_0100 EZ702U	400	400	1150	10.00	10/1	3000	6000	14	3.0	1.0	55	21
750	56	111	2.1	5.0	P731_0080 EZ702U	320	320	1340	8.000	8/1	3000	6000	15	3.0	1.0	58	21
P8 (n_{1N} = 2000 rpm, $M_{2acc,max}$ = 1840 Nm)																	
100	830	1256	5.8	1.5	P832_0200 EZ805U	1840	2000	3230	20.00	20/1	2700	5000	137	4.0	2.0	177	76
125	664	1005	7.4	1.7	P832_0160 EZ805U	1600	1600	3200	16.00	16/1	2700	5000	137	4.0	2.0	174	76
167	498	754	12	1.6	P832_0120 EZ805U	1200	1200	2400	12.00	12/1	2200	4500	139	4.0	2.0	168	76
200	424	641	3.8	1.8	P831_0100 EZ805U	1380	1380	2760	10.00	10/1	2800	4500	136	3.0	1.0	150	70
250	339	513	4.8	2.4	P831_0080 EZ805U	1500	1500	3000	8.000	8/1	2800	4500	137	3.0	1.0	162	70
286	297	449	4.5	3.4	P831_0070 EZ805U	1390	1390	3230	7.000	7/1	2800	4500	138	3.0	1.0	170	70

n_{2N} [rpm]	M_{2N} [Nm]	$M_{2,0}$ [Nm]	a_{th}	S	Type	M_{2acc} [Nm]	M_{2accHT} [Nm]	M_{2NOT} [Nm]	i	i_{exakt}	n_{1maxDB} [rpm]	n_{1maxZB} [rpm]	J_1 [kgcm²]	$\Delta\varphi_2$ [arcmin]	$\Delta\varphi_{2red}$ [arcmin]	C_2 [Nm/ arcmin]	m [kg]
P8 (n_{1N} = 2000 rpm, $M_{2acc,max}$ = 1840 Nm)																	
400	212	321	6.8	4.7	P831_0050 EZ805U	990	990	2510	5.000	5/1	2500	4000	143	3.0	1.0	185	70
500	170	256	11	4.7	P831_0040 EZ805U	800	800	2020	4.000	4/1	2000	3500	151	3.0	1.0	187	70
P8 (n_{1N} = 3000 rpm, $M_{2acc,max}$ = 1840 Nm)																	
30	703	789	0.6	1.3	P832_1000 EZ701U	1320	1320	2640	100.0	100/1	3000	6000	9.1	4.0	2.0	148	39
38	562	631	0.6	1.8	P832_0800 EZ701U	1380	1380	2760	80.00	80/1	3000	6000	9.1	4.0	2.0	159	39
43	492	552	0.5	2.5	P832_0700 EZ701U	1330	1330	3220	70.00	70/1	3000	6000	9.1	4.0	2.0	164	39
43	798	958	0.9	1.6	P832_0700 EZ702U	1610	1610	3220	70.00	70/1	3000	6000	14	4.0	2.0	164	41
54	394	442	0.7	2.6	P832_0560 EZ701U	1060	1060	2760	56.00	56/1	3000	6000	9.6	4.0	2.0	159	39
54	638	766	1.2	1.6	P832_0560 EZ702U	1380	1380	2760	56.00	56/1	3000	6000	15	4.0	2.0	159	41
60	352	394	0.6	3.6	P832_0500 EZ701U	950	950	3230	50.00	50/1	3000	6000	9.1	4.0	2.0	173	39
60	570	684	1.0	2.2	P832_0500 EZ702U	1840	1950	3230	50.00	50/1	3000	6000	14	4.0	2.0	173	41
60	784	988	1.4	1.6	P832_0500 EZ703U	1840	2000	3230	50.00	50/1	3000	6000	22	4.0	2.0	173	43
75	281	315	0.9	3.6	P832_0400 EZ701U	760	760	3200	40.00	40/1	3000	6000	9.2	4.0	2.0	168	39
75	456	547	1.4	2.2	P832_0400 EZ702U	1560	1560	3200	40.00	40/1	3000	6000	14	4.0	2.0	168	41
75	627	790	1.9	1.6	P832_0400 EZ703U	1600	1600	3200	40.00	40/1	3000	6000	22	4.0	2.0	168	43
75	809	1148	2.5	1.3	P832_0400 EZ705U	1600	1600	3200	40.00	40/1	3000	6000	35	4.0	2.0	168	49
86	399	479	1.2	3.2	P832_0350 EZ702U	1360	1360	3230	35.00	35/1	3000	6000	15	4.0	2.0	176	41
86	549	692	1.6	2.3	P832_0350 EZ703U	1840	2000	3230	35.00	35/1	3000	6000	23	4.0	2.0	176	43
86	708	1004	2.1	1.8	P832_0350 EZ705U	1840	2000	3230	35.00	35/1	3000	6000	35	4.0	2.0	176	49
86	741	1234	2.2	1.7	P832_0350 EZ802U	1840	2000	3230	35.00	35/1	3000	6000	59	4.0	2.0	176	57
94	225	252	1.0	4.5	P832_0320 EZ701U	610	610	3050	32.00	32/1	2700	5000	12	4.0	2.0	159	39
94	365	438	1.6	2.8	P832_0320 EZ702U	1250	1250	3050	32.00	32/1	2700	5000	17	4.0	2.0	159	41
94	502	632	2.1	2.0	P832_0320 EZ703U	1520	1600	3050	32.00	32/1	2700	5000	25	4.0	2.0	159	43
94	648	918	2.8	1.6	P832_0320 EZ705U	1520	1600	3050	32.00	32/1	2700	5000	38	4.0	2.0	159	49
94	678	1128	2.9	1.5	P832_0320 EZ802U	1520	1600	3050	32.00	32/1	2700	5000	62	4.0	2.0	159	57
107	319	383	1.7	3.2	P832_0280 EZ702U	1090	1090	3200	28.00	28/1	3000	5000	15	4.0	2.0	172	41
107	439	553	2.3	2.3	P832_0280 EZ703U	1600	1600	3200	28.00	28/1	3000	5000	23	4.0	2.0	172	43
107	567	803	3.0	1.8	P832_0280 EZ705U	1600	1600	3200	28.00	28/1	3000	5000	35	4.0	2.0	172	49
107	593	987	3.1	1.7	P832_0280 EZ802U	1600	1600	3200	28.00	28/1	3000	5000	59	4.0	2.0	172	57
120	285	342	1.4	4.4	P832_0250 EZ702U	970	970	3230	25.00	25/1	2900	5000	16	4.0	2.0	177	41
120	392	494	1.9	3.2	P832_0250 EZ703U	1540	1540	3230	25.00	25/1	2900	5000	24	4.0	2.0	177	43
120	506	717	2.5	2.5	P832_0250 EZ705U	1840	2000	3230	25.00	25/1	2900	5000	36	4.0	2.0	177	49
120	530	881	2.6	2.4	P832_0250 EZ802U	1840	2000	3230	25.00	25/1	2900	5000	60	4.0	2.0	177	57
120	632	1145	3.1	2.0	P832_0250 EZ803U	1840	2000	3230	25.00	25/1	2900	5000	86	4.0	2.0	177	63
150	314	395	2.2	4.0	P832_0200 EZ703U	1240	1240	3230	20.00	20/1	2700	5000	26	4.0	2.0	177	43
150	405	574	2.8	3.1	P832_0200 EZ705U	1840	1980	3230	20.00	20/1	2700	5000	38	4.0	2.0	177	49
150	424	705	3.0	3.0	P832_0200 EZ802U	1840	1900	3230	20.00	20/1	2700	5000	62	4.0	2.0	177	57
150	505	916	3.5	2.5	P832_0200 EZ803U	1840	2000	3230	20.00	20/1	2700	5000	87	4.0	2.0	177	63
188	251	316	3.0	4.0	P832_0160 EZ703U	990	990	3200	16.00	16/1	2700	5000	26	4.0	2.0	174	43
188	324	459	3.9	3.1	P832_0160 EZ705U	1580	1580	3200	16.00	16/1	2700	5000	38	4.0	2.0	174	49
188	339	564	4.1	3.0	P832_0160 EZ802U	1520	1520	3200	16.00	16/1	2700	5000	62	4.0	2.0	174	57
188	404	733	4.9	2.5	P832_0160 EZ803U	1600	1600	3200	16.00	16/1	2700	5000	88	4.0	2.0	174	63
250	188	237	4.4	4.3	P832_0120 EZ703U	740	740	2400	12.00	12/1	2200	4500	28	4.0	2.0	168	43
250	243	344	5.7	3.3	P832_0120 EZ705U	1190	1190	2400	12.00	12/1	2200	4500	40	4.0	2.0	168	49
250	254	423	6.0	3.1	P832_0120 EZ802U	1140	1140	2400	12.00	12/1	2200	4500	64	4.0	2.0	168	57
250	303	549	7.1	2.6	P832_0120 EZ803U	1200	1200	2400	12.00	12/1	2200	4500	89	4.0	2.0	168	63
300	216	360	2.2	3.1	P831_0100 EZ802U	970	970	2760	10.00	10/1	2800	4500	61	3.0	1.0	150	51
300	258	468	2.7	2.6	P831_0100 EZ803U	1380	1380	2760	10.00	10/1	2800	4500	86	3.0	1.0	150	57
375	173	288	2.8	4.0	P831_0080 EZ802U	780	780	3000	8.000	8/1	2800	4500	62	3.0	1.0	162	51
375	206	374	3.4	3.4	P831_0080 EZ803U	1130	1130	3000	8.000	8/1	2800	4500	88	3.0	1.0	162	57
429	181	327	3.2	4.8	P831_0070 EZ803U	980	980	3230	7.000	7/1	2800	4500	89	3.0	1.0	170	57
P8 (n_{1N} = 4500 rpm, $M_{2acc,max}$ = 1840 Nm)																	
80	644	1064	1.4	1.4	P832_0560 EZ703U	1380	1380	2760	56.00	56/1	3000	6000	23	4.0	2.0	159	43
90	575	950	1.1	1.9	P832_0500 EZ703U	1840	2000	3230	50.00	50/1	3000	6000	22	4.0	2.0	173	43
113	460	760	1.6	1.9	P832_0400 EZ703U	1600	1600	3200	40.00	40/1	3000	6000	22	4.0	2.0	168	43
113	623	1140	2.2	1.4	P832_0400 EZ705U	1600	1600	3200	40.00	40/1	3000	6000	35	4.0	2.0	168	49
129	349	1147	1.2	3.2	P832_0350 EZ802U	1840	2000	3230	35.00	35/1	3000	6000	59	4.0	2.0	176	57
129	402	665	1.4	2.7	P832_0350 EZ703U	1840	2000	3230	35.00	35/1	3000	6000	23	4.0	2.0	176	43
129	545	998	1.9	2.0	P832_0350 EZ705U	1840	2000	3230	35.00	35/1	3000	6000	35	4.0	2.0	176	49
141	319	1049	1.6	2.8	P832_0320 EZ802U	1520	1600	3050	32.00	32/1	2700	5000	62	4.0	2.0	159	57
141	368	608	1.8	2.4	P832_0320 EZ703U	1520	1600	3050	32.00	32/1	2700	5000	25	4.0	2.0	159	43
141	499	912	2.4	1.8	P832_0320 EZ705U	1520	1600	3050	32.00	32/1	2700	5000	38	4.0	2.0	159	49
161	279	918	1.7	3.2	P832_0280 EZ802U	1600	1600	3200	28.00	28/1	3000	5000	59	4.0	2.0	172	57
161	322	532	1.9	2.7	P832_0280 EZ703U	1600	1600	3200	28.00	28/1	3000	5000	23	4.0	2.0	172	43
161	436	798	2.6	2.0	P832_0280 EZ705U	1600	1600	3200	28.00	28/1	3000	5000	35	4.0	2.0	172	49

n_{2N} [rpm]	M_{2N} [Nm]	$M_{2,0}$ [Nm]	a_{th}	S	Type	M_{2acc} [Nm]	M_{2accHT} [Nm]	M_{2NOT} [Nm]	i	i_{exakt}	n_{1maxDB} [rpm]	n_{1maxZB} [rpm]	J_1 [kgcm²]	$\Delta\varphi_2$ [arcmin]	$\Delta\varphi_{2red}$ [arcmin]	C_2 [Nm/ arcmin]	m [kg]
P8 (n_{1N} = 4500 rpm, $M_{2acc,max}$ = 1840 Nm)																	
180	249	819	1.4	4.4	P832_0250 EZ802U	1840	2000	3230	25.00	25/1	2900	5000	60	4.0	2.0	177	57
180	287	475	1.6	3.8	P832_0250 EZ703U	1540	1540	3230	25.00	25/1	2900	5000	24	4.0	2.0	177	43
180	390	713	2.2	2.8	P832_0250 EZ705U	1840	2000	3230	25.00	25/1	2900	5000	36	4.0	2.0	177	49
225	230	380	1.8	4.8	P832_0200 EZ703U	1240	1240	3230	20.00	20/1	2700	5000	26	4.0	2.0	177	43
225	312	570	2.5	3.5	P832_0200 EZ705U	1840	1980	3230	20.00	20/1	2700	5000	38	4.0	2.0	177	49
281	184	304	2.5	4.8	P832_0160 EZ703U	990	990	3200	16.00	16/1	2700	5000	26	4.0	2.0	174	43
281	249	456	3.5	3.5	P832_0160 EZ705U	1580	1580	3200	16.00	16/1	2700	5000	38	4.0	2.0	174	49
375	187	342	4.6	4.1	P832_0120 EZ705U	1190	1190	2400	12.00	12/1	2200	4500	40	4.0	2.0	168	49
P8 (n_{1N} = 6000 rpm, $M_{2acc,max}$ = 1840 Nm)																	
60	494	751	0.6	1.4	P832_1000 EZ701U	1320	1320	2640	100.0	100/1	3000	6000	9.1	4.0	2.0	148	39
75	395	600	0.5	2.0	P832_0800 EZ701U	1380	1380	2760	80.00	80/1	3000	6000	9.1	4.0	2.0	159	39
86	346	525	0.5	2.9	P832_0700 EZ701U	1330	1330	3220	70.00	70/1	3000	6000	9.1	4.0	2.0	164	39
86	479	951	0.6	2.1	P832_0700 EZ702U	1610	1610	3220	70.00	70/1	3000	6000	14	4.0	2.0	164	41
107	277	420	0.6	2.9	P832_0560 EZ701U	1060	1060	2760	56.00	56/1	3000	6000	9.6	4.0	2.0	159	39
107	383	761	0.9	2.1	P832_0560 EZ702U	1380	1380	2760	56.00	56/1	3000	6000	15	4.0	2.0	159	41
120	247	375	0.5	4.1	P832_0500 EZ701U	950	950	3230	50.00	50/1	3000	6000	9.1	4.0	2.0	173	39
120	342	679	0.7	3.0	P832_0500 EZ702U	1840	1950	3230	50.00	50/1	3000	6000	14	4.0	2.0	173	41
150	198	300	0.8	4.1	P832_0400 EZ701U	760	760	3200	40.00	40/1	3000	6000	9.2	4.0	2.0	168	39
150	274	543	1.0	3.0	P832_0400 EZ702U	1560	1560	3200	40.00	40/1	3000	6000	14	4.0	2.0	168	41
171	239	475	0.9	4.2	P832_0350 EZ702U	1360	1360	3230	35.00	35/1	3000	6000	15	4.0	2.0	176	41
P9 (n_{1N} = 2000 rpm, $M_{2acc,max}$ = 3450 Nm)																	
57	1453	2198	2.5	1.6	P932_0350 EZ805U	3300	–	6600	35.00	35/1	2800	4500	138	4.0	–	404	103
71	1162	1758	2.9	2.0	P932_0280 EZ805U	3000	–	6000	28.00	28/1	2800	4500	139	4.0	–	402	103
80	1038	1570	2.9	2.4	P932_0250 EZ805U	3300	–	6600	25.00	25/1	2500	4000	143	4.0	–	407	103
100	830	1256	3.1	3.0	P932_0200 EZ805U	3450	–	6900	20.00	20/1	2000	3500	151	4.0	–	407	103
125	664	1005	4.4	3.0	P932_0160 EZ805U	3000	–	6000	16.00	16/1	2000	3500	152	4.0	–	406	103
P9 (n_{1N} = 3000 rpm, $M_{2acc,max}$ = 3300 Nm)																	
60	1059	1762	1.1	2.2	P932_0500 EZ802U	3200	–	6400	50.00	50/1	2800	4500	61	4.0	–	399	84
60	1264	2290	1.3	1.8	P932_0500 EZ803U	3200	–	6400	50.00	50/1	2800	4500	86	4.0	–	399	90
75	847	1410	1.4	2.4	P932_0400 EZ802U	3000	–	6000	40.00	40/1	2800	4500	61	4.0	–	394	84
75	1011	1832	1.7	2.0	P932_0400 EZ803U	3000	–	6000	40.00	40/1	2800	4500	86	4.0	–	394	90
86	741	1234	1.3	3.2	P932_0350 EZ802U	3300	–	6600	35.00	35/1	2800	4500	64	4.0	–	404	84
86	884	1603	1.5	2.7	P932_0350 EZ803U	3300	–	6600	35.00	35/1	2800	4500	89	4.0	–	404	90
107	593	987	1.5	3.8	P932_0280 EZ802U	2660	–	6000	28.00	28/1	2800	4500	64	4.0	–	402	84
107	708	1282	1.8	3.2	P932_0280 EZ803U	3000	–	6000	28.00	28/1	2800	4500	89	4.0	–	402	90
120	530	881	1.5	4.6	P932_0250 EZ802U	2380	–	6600	25.00	25/1	2500	4000	69	4.0	–	407	84
120	632	1145	1.7	3.9	P932_0250 EZ803U	3300	–	6600	25.00	25/1	2500	4000	94	4.0	–	407	90
150	505	916	1.9	4.9	P932_0200 EZ803U	2760	–	6900	20.00	20/1	2000	3500	102	4.0	–	407	90
188	404	733	2.7	4.9	P932_0160 EZ803U	2200	–	6000	16.00	16/1	2000	3500	103	4.0	–	406	90
P9 (n_{1N} = 4500 rpm, $M_{2acc,max}$ = 3200 Nm)																	
64	698	2294	0.5	3.2	P932_0700 EZ802U	3160	–	6310	70.00	70/1	2800	4500	61	4.0	–	372	84
90	499	1639	0.5	4.4	P932_0500 EZ802U	3200	–	6400	50.00	50/1	2800	4500	61	4.0	–	399	84

2.3 Dimensional drawings

In this chapter you can find the dimensions of the geared motors.

There is a dimensional drawing for every possible shaft/housing design, each with the tables for gear unit dimensions, motor dimensions and geared motor dimensions.

Dimensions can exceed the specifications of ISO 2768-mK due to casting tolerances or accumulation of individual tolerances.

We reserve the right to make dimensional changes due to ongoing technical development.

You can download 3D models of our standard drives at http://configurator.stoeber.de.

Combination options and the dimensions of forced ventilated geared motors can also be found at http://configurator.stoeber.de.

Tolerances

Solid shaft	Tolerance
Fit	ISO k6
Feather keys	DIN 6885-1, high form A
Balancing	With half feather key

Centering holes in solid shafts in accordance with DIN 332-2, DR shape

Thread size	M4	M5	M6	M8	M10	M12	M16	M20	M24
Thread depth [mm]	10	12.5	16	19	22	28	36	42	50

2.3.1 G shaft design (solid shaft without feather key)

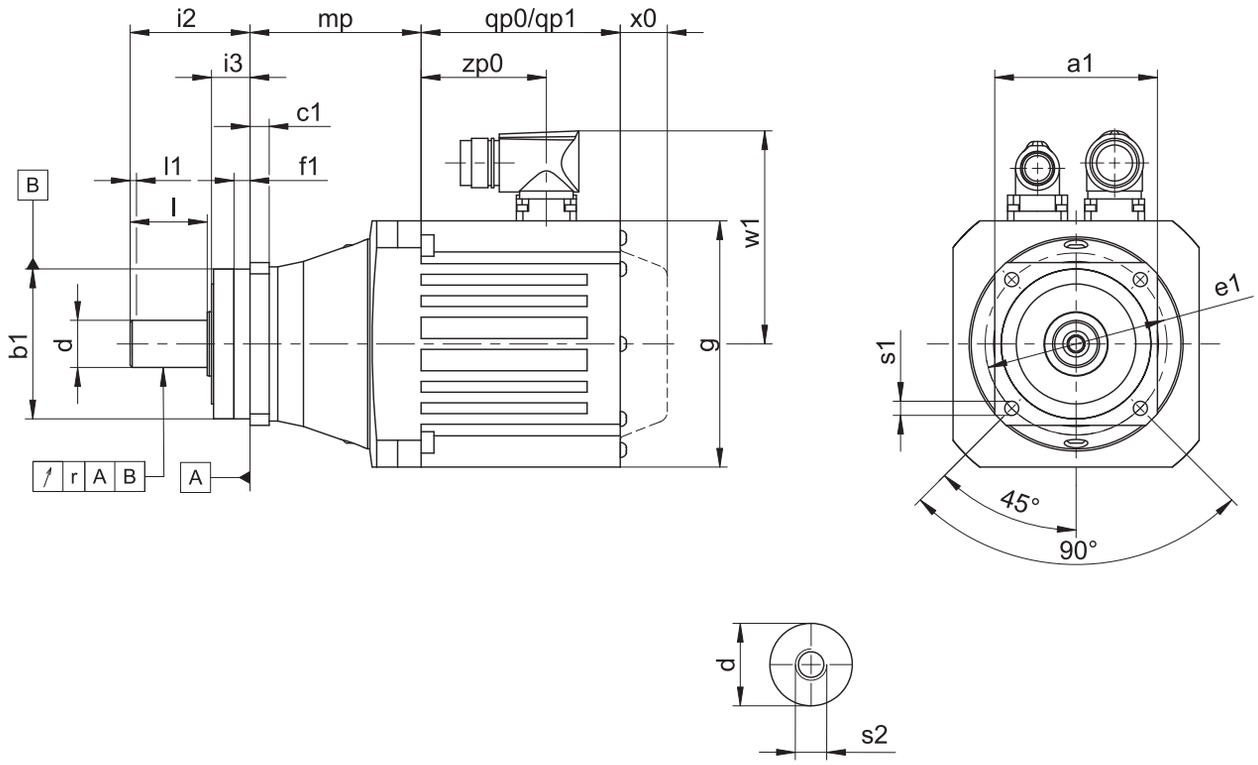

qp0	Applies to motors without brake.	qp1	Applies to motors with brake.
x0	Applies to encoders using an optical measuring method.	w1	Different for the One Cable Solution (OCS), see the chapter [▸ 17.4]
–	The radial runout specification applies only to the reinforced bearing D.		

Dimensions of gear units

Type	□a1	Øb1	c1	Ød	Øe1	f1	i2	i3	l	r	Øs1	s2
P231	55	50_{h6}	6	12_{k6}	63	7.0	36	12	22	–	5.5	M4
P232	55	50_{h6}	6	12_{k6}	63	7.0	36	12	22	–	5.5	M4
P331	72	60_{h6}	7	16_{k6}	75	7.5	48	18	28	0.025	5.5	M5
P332	72	60_{h6}	7	16_{k6}	75	7.5	48	18	28	0.025	5.5	M5
P431	76	70_{h6}	9	22_{k6}	85	7.5	56	18	36	0.025	6.6	M8
P432	76	70_{h6}	9	22_{k6}	85	7.5	56	18	36	0.025	6.6	M8
P531	101	90_{h6}	10	32_{k6}	120	15.0	88	28	58	0.030	9.0	M12
P532	101	90_{h6}	10	32_{k6}	120	15.0	88	28	58	0.030	9.0	M12
P731	144	130_{h6}	15	40_{k6}	165	3.5	112	27	82	0.035	11.0	M16
P732	144	130_{h6}	15	40_{k6}	165	3.5	112	27	82	0.035	11.0	M16
P831	190	160_{h6}	15	55_{k6}	215	10.0	112	27	82	0.035	13.5	M20
P832	190	160_{h6}	15	55_{k6}	215	10.0	112	27	82	0.035	13.5	M20
P932	212	180_{h6}	17	75_{k6}	250	10.0	143	34	105	0.040	17.5	M20

Dimensions of motors

Type	□g	qp0	qp1	w1	x0	zp0
EZ301U	72	90	130.0	55.5	21	54.5
EZ302U	72	112	152.0	55.5	21	76.5
EZ303U	72	134	174.0	55.5	21	98.5
EZ401U	98	98	146.5	91.0	22	56.0
EZ402U	98	123	171.5	91.0	22	81.0
EZ404U	98	173	221.5	91.0	22	131.0
EZ501U	115	93	147.5	100.0	22	58.5
EZ502U	115	118	172.5	100.0	22	83.5
EZ503U	115	143	197.5	100.0	22	108.5
EZ505U	115	193	247.5	100.0	22	158.5
EZ701U	145	102	161.0	115.0	22	64.0
EZ702U	145	127	186.0	115.0	22	89.0
EZ703U	145	152	211.0	115.0	22	114.0
EZ705U	145	207	266.0	134.0	22	165.0
EZ802U	190	197	274.0	156.5	22	143.0
EZ803U	190	238	315.0	156.5	22	184.0
EZ805U	190	320	397.0	156.5	22	266.0

Dimensions of geared motors

Type	EZ3	EZ4	EZ5	EZ7	EZ8
	mp	mp	mp	mp	mp
P231	61.5	–	–	–	–
P232	93.5	–	–	–	–
P331	68.5	65.0	–	–	–
P332	103.0	–	–	–	–
P431	–	80.5	80.0	–	–
P432	117.5	114.0	–	–	–
P531	–	–	80.5	83.5	–
P532	–	122.5	122.0	–	–
P731	–	–	–	100.5	110.5
P732	–	–	148.5	151.5	–
P831	–	–	–	–	141.5
P832	–	–	–	192.5	202.5
P932	–	–	–	–	262.5

2.3.2 P shaft design (solid shaft with feather key)

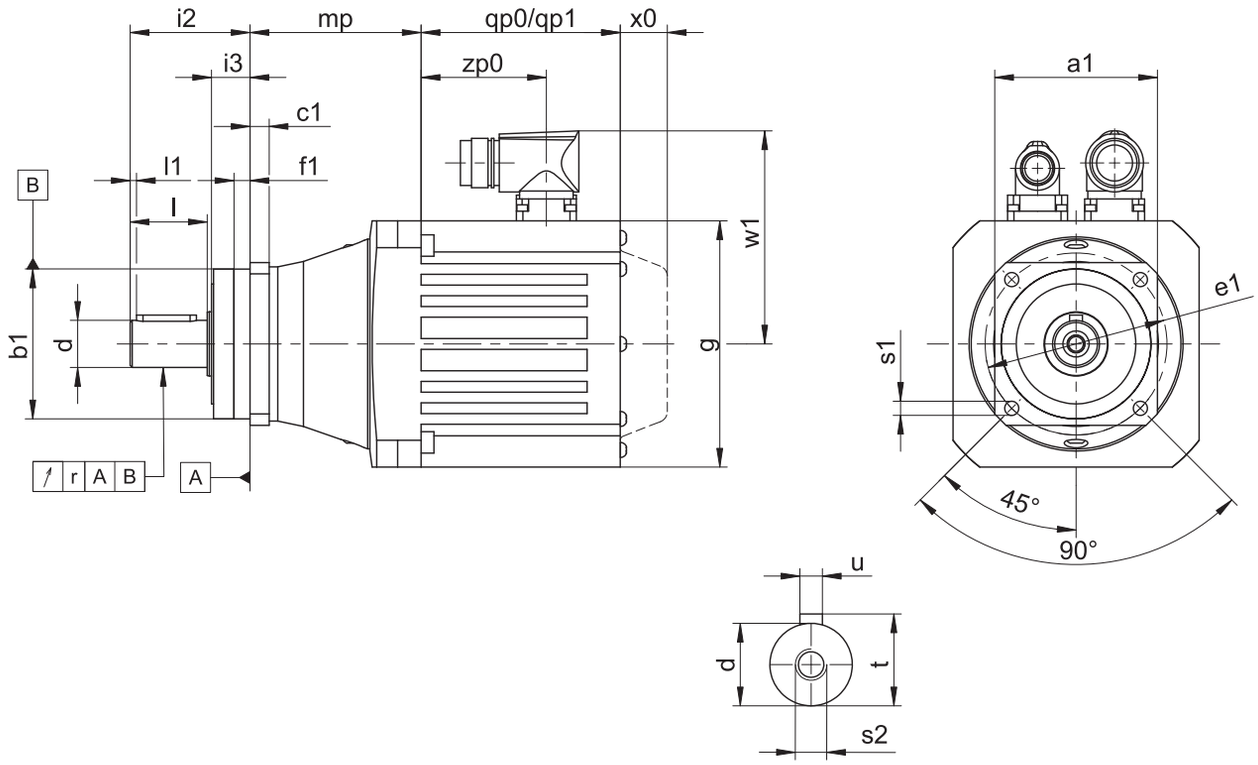

qp0	Applies to motors without brake.	qp1	Applies to motors with brake.
x0	Applies to encoders using an optical measuring method.	w1	Different for the One Cable Solution (OCS), see the chapter [▸ 17.4]
–	The radial runout specification applies only to the reinforced bearing D.		

Dimensions of gear units

Type	□a1	Øb1	c1	Ød	Øe1	f1	i2	i3	l	l1	r	Øs1	s2	t	u
P231	55	50_{h6}	6	12_{k6}	63	7.0	36	12	22	2	–	5.5	M4	13.5	A4×4×18
P232	55	50_{h6}	6	12_{k6}	63	7.0	36	12	22	2	–	5.5	M4	13.5	A4×4×18
P331	72	60_{h6}	7	16_{k6}	75	7.5	48	18	28	2	0.025	5.5	M5	18.0	A5×5×22
P332	72	60_{h6}	7	16_{k6}	75	7.5	48	18	28	2	0.025	5.5	M5	18.0	A5×5×22
P431	76	70_{h6}	9	22_{k6}	85	7.5	56	18	36	3	0.025	6.6	M8	24.5	A6×6×28
P432	76	70_{h6}	9	22_{k6}	85	7.5	56	18	36	3	0.025	6.6	M8	24.5	A6×6×28
P531	101	90_{h6}	10	32_{k6}	120	15.0	88	28	58	3	0.030	9.0	M12	35.0	A10×8×50
P532	101	90_{h6}	10	32_{k6}	120	15.0	88	28	58	3	0.030	9.0	M12	35.0	A10×8×50
P731	144	130_{h6}	15	40_{k6}	165	3.5	112	27	82	4	0.035	11.0	M16	43.0	A12×8×70
P732	144	130_{h6}	15	40_{k6}	165	3.5	112	27	82	4	0.035	11.0	M16	43.0	A12×8×70
P831	190	160_{h6}	15	55_{k6}	215	10.0	112	27	82	6	0.035	13.5	M20	59.0	A16×10×70
P832	190	160_{h6}	15	55_{k6}	215	10.0	112	27	82	6	0.035	13.5	M20	59.0	A16×10×70
P932	212	180_{h6}	17	75_{k6}	250	10.0	143	34	105	7	0.040	17.5	M20	79.5	A20×12×90

Dimensions of motors

Type	□g	qp0	qp1	w1	x0	zp0
EZ301U	72	90	130.0	55.5	21	54.5
EZ302U	72	112	152.0	55.5	21	76.5
EZ303U	72	134	174.0	55.5	21	98.5
EZ401U	98	98	146.5	91.0	22	56.0
EZ402U	98	123	171.5	91.0	22	81.0
EZ404U	98	173	221.5	91.0	22	131.0
EZ501U	115	93	147.5	100.0	22	58.5
EZ502U	115	118	172.5	100.0	22	83.5
EZ503U	115	143	197.5	100.0	22	108.5
EZ505U	115	193	247.5	100.0	22	158.5
EZ701U	145	102	161.0	115.0	22	64.0
EZ702U	145	127	186.0	115.0	22	89.0
EZ703U	145	152	211.0	115.0	22	114.0
EZ705U	145	207	266.0	134.0	22	165.0
EZ802U	190	197	274.0	156.5	22	143.0
EZ803U	190	238	315.0	156.5	22	184.0
EZ805U	190	320	397.0	156.5	22	266.0

Dimensions of geared motors

Type	EZ3	EZ4	EZ5	EZ7	EZ8
	mp	mp	mp	mp	mp
P231	61.5	–	–	–	–
P232	93.5	–	–	–	–
P331	68.5	65.0	–	–	–
P332	103.0	–	–	–	–
P431	–	80.5	80.0	–	–
P432	117.5	114.0	–	–	–
P531	–	–	80.5	83.5	–
P532	–	122.5	122.0	–	–
P731	–	–	–	100.5	110.5
P732	–	–	148.5	151.5	–
P831	–	–	–	–	141.5
P832	–	–	–	192.5	202.5
P932	–	–	–	–	262.5

2.4 Type designation

In this chapter, you can find an explanation of the type designation with the associated options.

Additional ordering information not included in the type designation can be found at the end of the chapter.

Example code

P	4	3	1	S	G	S	S	0100	EZ401U

Explanation

Code	Designation	Design
P	Type	Planetary gear unit
4	Size	4 (example)
3	Generation	Generation 3
1	Stages	Single-stage
2		Two-stage
S	Housing	Standard
G	Shaft	Solid shaft without feather key
P		Solid shaft with feather key
S	Bearing	Standard bearing
D		Axially reinforced bearing (P3 – P9)
Z		Radially reinforced bearing (P3 – P9)[1]
S	Backlash	Standard
R		Reduced
0100	Transmission ratio (i x 10)	i = 10 (example)
EZ401U	Motor	EZ synchronous servo motor

To complete the type designation, also specify the following in your order:

- A detailed type designation of the motor, see the chapter [▸ 17]
- Radial shaft seal rings at the output made of NBR or FKM (option), see the chapter [▸ 2.6.3]
- Position of the plug connectors, see the chapter [▸ 2.5.4]
- Reverse operation of the output shaft from ±20° to ±90° and horizontal installation, note the chapter Reverse operation

2.4.1 Nameplate

An example geared motor nameplate is explained in the figure below.

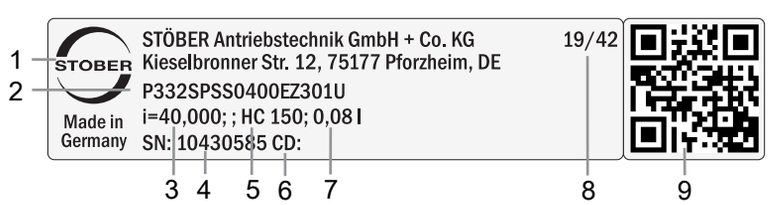

Code	Designation
1	Name of manufacturer
2	Type designation
3	Gear ratio of the gear unit
4	Serial number of the gear unit
5	Lubricant specification
6	Customer-specific data
7	Lubricant fill volume
8	Date of manufacture (year/calendar week)
9	QR code (link to product information)

[1] Not for reduced-backlash option.

2.4.1.1 Supporting documents

You can view or download supporting documents for the product by reading off the serial number on the nameplate of the product and entering it at the following address online:
https://id.stober.com

Alternatively, you can use a suitable mobile device to scan in the QR code on the nameplate of the product in order to be linked to the supporting documents.

2.5 Product description

2.5.1 Input options

EZ synchronous servo motor

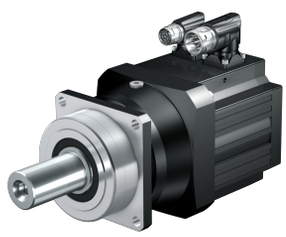

http://www.stoeber.de/en/PEZ

LM Lean motor

http://www.stoeber.de/en/PLM

2.5.2 Installation conditions

The specified torques and forces only apply when gear units are fastened on the machine side using screws of strength class 12.9. In addition, the gear housings must be adjusted at the pilot. The machine-side fit must be H7.

2.5.3 Lubricants

STOBER fills the gear units with the amount and type of lubricant specified on the nameplate.

You will receive lubricants for use in the food industry upon request.

2.5.4 Position of the plug connectors

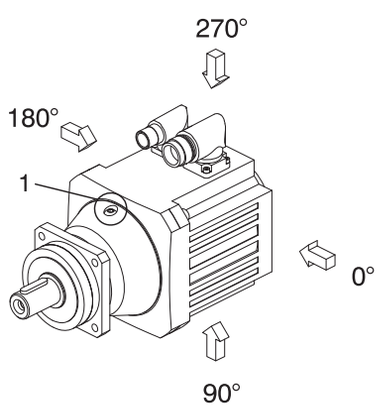

In the standard version, the plug connectors are attached in the 270° position (relative to the oil drain plug (1) of the planetary gear unit). Indicate variations for your geared motor in the order.

2.5.5 Other product features

Feature	Value
Max. permitted gear unit temperature (on the surface of the gear unit)	≤ 90 °C
Paint	Black RAL 9005
Explosion-proof design in accordance with (ATEX) Directive 2014/34/EU (optional)	Not available
Efficiency: η_{get} single-stage η_{get} two-stage	 97% 95%
Protection class:[2] Gear unit Motor	 IP65 IP56, optionally IP66

2.5.6 Direction of rotation

The input and output rotate in the same direction.

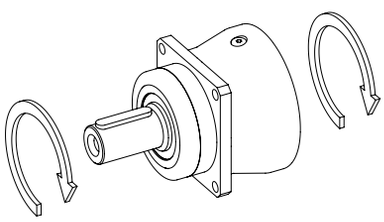

2.6 Project configuration

Project your drives using our SERVOsoft designing software. Download SERVOsoft for free at https://www.stoeber.de/en/ServoSoft.

Observe the limit conditions in this chapter to ensure a safe design for your drives.

An explanation of the formula symbols can be found in Chapter [▸ 23.1].

The formula symbols for values actually present in the application are marked with *.

2.6.1 Calculation of the operating point

Check the following conditions for operating points other than the nominal point M_{2N} specified in the selection tables.

$$n_{1m*} \leq \frac{n_{1maxDB}}{fB_T}$$

$$n_{1max*} \leq \frac{n_{1max\,ZB}}{fB_T}$$

$$M_{2eff*} \leq M_{2th}$$

$$M_{2acc*} \leq \frac{M_{2acc}}{fB_{ZB}}$$

$$M_{2NOT*} \leq M_{2NOT}$$

$$M_{2eq*} \leq M_{2N} \cdot \frac{S}{fB_{op} \cdot fB_t}$$

Refer to the selection tables for the values for n_{1maxDB}, n_{1maxZB}, M_{2acc} (M_{2accHT} for reduced backlash), M_{2NOT}, M_{2N} and S.

The values for fB_T, fB_{op}, fB_t and fB_{ZB} can be found in the corresponding tables in this chapter.

Calculate the thermal limit torque M_{2th} for a duty cycle > 50%.

[2] Observe the protection class of all the components.

Example of cyclic operation

The following calculations are based on a representation of the power taken from the output based in accordance with the following example:

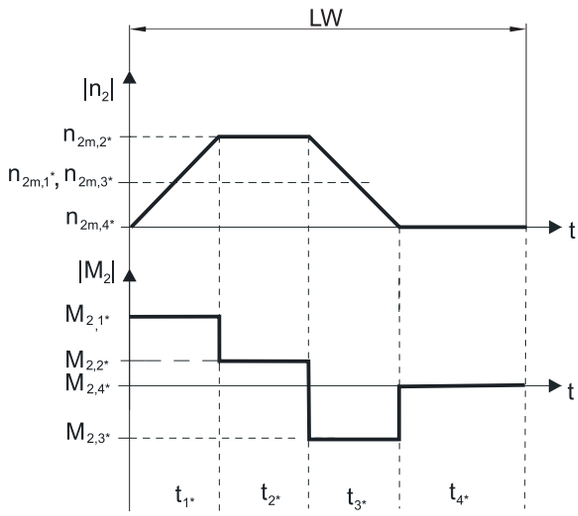

Calculation of the actual average input speed

$$n_{1m*} = n_{2m*} \cdot i$$

$$n_{2m*} = \frac{|n_{2m,1*}| \cdot t_{1*} + \ldots + |n_{2m,n*}| \cdot t_{n*}}{t_{1*} + \ldots + t_{n*}}$$

If $t_{1*} + \ldots + t_{3*} \geq 6$ min, calculate n_{2m*} without the rest phase t_{4*}.

The values for the ratio i can be found in the selection tables.

Calculation of the actual effective torque

$$M_{2eff*} = \sqrt{\frac{t_{1*} \cdot M_{2,1*}^{2} + \ldots + t_{n*} \cdot M_{2,n*}^{2}}{t_{1*} + \ldots + t_{n*}}}$$

Calculation of the actual equivalent torque

$$M_{2eq*} = \sqrt[3]{\frac{|n_{2m,1*}| \cdot t_{1*} \cdot |M_{2,1*}^{3}| + \ldots + |n_{2m,n*}| \cdot t_{n*} \cdot |M_{2,n*}^{3}|}{|n_{2m,1*}| \cdot t_{1*} + \ldots + |n_{2m,n*}| \cdot t_{n*}}}$$

Calculation of the thermal limit torque

Calculate the thermal limit torque M_{2th} for a duty cycle $ED_{10} > 50\%$ and the actual average input speed n_{1m*}. (At $K_{mot,th} \leq 0$ you must reduce the average input speed n_{1m*} accordingly or select another geared motor size.)

$$M_{2th} = M_{op} \cdot i \cdot K_{mot,th}$$

$$K_{mot,th} = 0{,}95 - \frac{a_{th}}{1000} \cdot fB_T \cdot \left(\frac{n_{1m*}}{1000}\right)^3$$

The values for i and a_{th} can be found in the selection tables.

The values for fB_T can be found in the corresponding table in this chapter.

The value for the torque of the motor at operating point M_{op} with the determined average input speed n_{1m*} can be found in the motor curve of Chapter [▸ 17.3]. Note the size, nominal speed n_N and cooling type of the motor. The figure below shows an example of reading the torque M_{op} of a motor with convection cooling at the operating point.

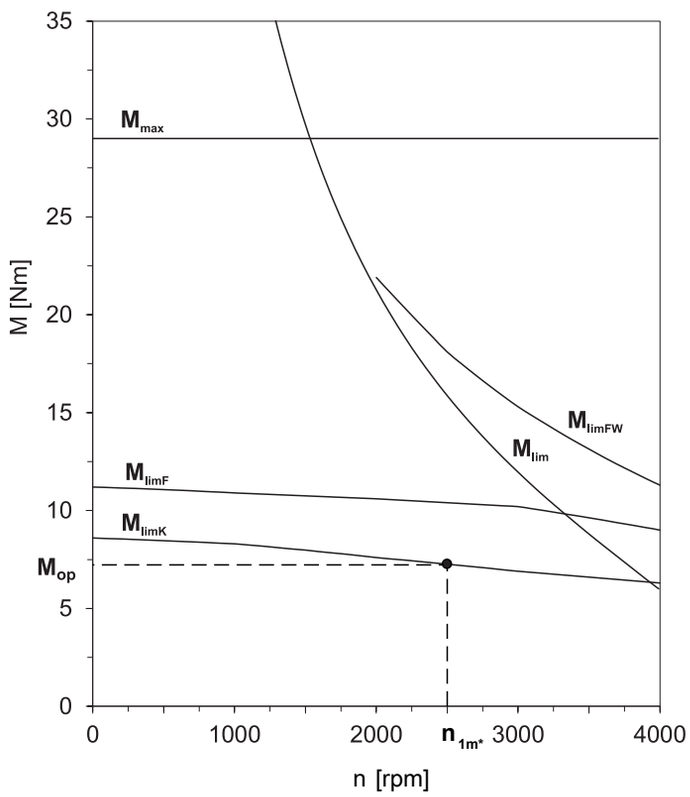

Operating factors

Operating mode	fB_{op}
Uniform continuous operation	1.00
Cyclic operation	1.00
Reversing load cyclic operation	1.00

Run time	fB_t
Daily runtime ≤ 8 h	1.00
Daily runtime ≤ 16 h	1.15
Daily runtime ≤ 24 h	1.20

Cyclic operation	fB_{ZB}
≤ 1000 load changes/hour (LW/h)	1.00
> 1000 load changes/hour (LW/h)	1.15

Temperature		fB_T
Motor cooling	**Surrounding temperature**	
Motor with forced ventilation	≤ 20 °C	0.9
	≤ 30 °C	1.0
	≤ 40 °C	1.15
Motor with convection cooling	≤ 20 °C	1.0
	≤ 30 °C	1.1
	≤ 40 °C	1.25

Notes

- The maximum permitted gear unit temperature (see the "Other product features" chapter) must not be exceeded. Doing so may result in damage to the geared motor.
- For braking from full speed (for example when the power fails or when setting up the machine), note the permitted gear unit torques (M_{2acc}, M_{2NOT}) in the selection tables.

2.6.2 Permitted shaft loads for the output shaft

The values specified in the tables apply to the permitted shaft loads:

- For shaft dimensions in accordance with the catalog
- For output speeds $n_{2m*} \leq 100$ rpm ($F^{2axN} = F_{2ax100}$; $F_{2radN} = F_{2rad100}$; $M_{2kN} = M_{2k100}$)
- Only if radial forces on the gear unit are stabilized by its pilots (housing, flange shaft)

Permitted shaft loads for standard bearing S

Type	z_2 [mm]	F_{2ax100} [N]	$F_{2rad100}$ [N]	$F_{2rad,acc}$ [N]	M_{2k100} [Nm]	$M_{2k,acc}$ [Nm]
P2	17.0	500	1200	1300	34	36
P3	17.5	1000	2500	2500	79	79
P4	18.5	1500	4000	4500	146	164
P5	19.5	2300	6500	7000	315	340
P7	23.0	2900	8500	9000	544	576
P8	24.5	4700	13000	18000	852	1179
P9	33.0	6000	18000	27000	1539	2309

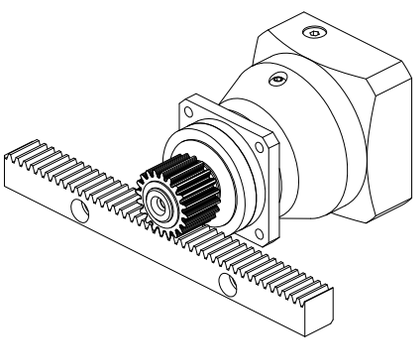

Fig. 1: Recommendation for bearing assignment S (e.g. for straight-cut gearing)

Permitted shaft loads for axially reinforced bearing D

Type	z_2 [mm]	F_{2ax100} [N]	$F_{2rad100}$ [N]	$F_{2rad,acc}$ [N]	M_{2k100} [Nm]	$M_{2k,acc}$ [Nm]
P3	20.0	2500	2750	2750	94	94
P4	22.5	4000	4500	5000	182	203
P5	25.5	6000	7000	8000	382	436
P7	29.0	10000	9500	10000	665	700
P8	32.0	15500	15000	18000	1095	1314
P9	44.0	25000	20000	30000	1930	2895

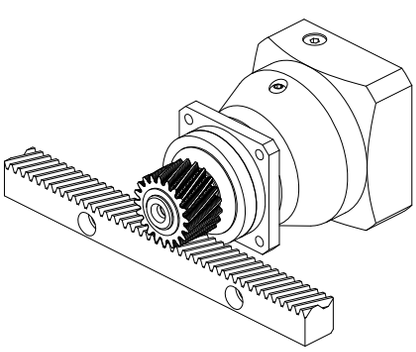

Fig. 2: Recommendation for bearing assignment D (e.g. for helical gearing)

Permitted shaft loads for radially reinforced bearing Z

Type	z_2 [mm]	F_{2ax100} [N]	$F_{2rad100}$ [N]	$F_{2rad,acc}$ [N]	M_{2k100} [Nm]	$M_{2k,acc}$ [Nm]
P3	17.5	600	3000	3000	95	95
P4	18.5	1000	5000	5000	183	183
P5	19.5	1600	8000	8000	388	388
P7	23.0	2000	10000	10000	640	640
P8	24.5	3600	18000	18000	1179	1179
P9	33.0	5000	27000	35000	2309	2993

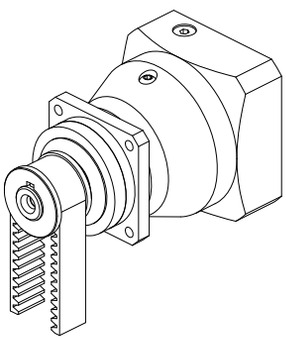

Fig. 3: Recommendation for bearing assignment Z (e.g. for belt drives)

For other output speeds, download diagrams at http://configurator.stoeber.de.

The following applies to output speeds n_{2m*} > 100 rpm:

$$F_{2axN} = \frac{F_{2ax100}}{\sqrt[3]{\frac{n_{2m*}}{100\ \text{rpm}}}} \qquad F_{2radN} = \frac{F_{2rad100}}{\sqrt[3]{\frac{n_{2m*}}{100\ \text{rpm}}}} \qquad M_{2kN} = \frac{M_{2k100}}{\sqrt[3]{\frac{n_{2m*}}{100\ \text{rpm}}}}$$

The values for F_{2ax100}, $F_{2rad100}$ and M_{2k100} can be found in the table "Permitted shaft loads" in this chapter.

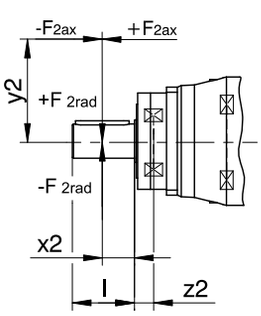

Fig. 4: Force application points

The specified values for $F_{2rad100}$ and $F_{2rad,acc}$ refer to an application of force at the center of the output shaft: $x_2 = l/2$.

Shaft dimensions can be found in the "Dimensional drawings" chapter.

The following applies to other force application points:

$$M_{2k,acc*} = \frac{2 \cdot F_{2ax*} \cdot y_2 + F_{2rad,acc*} \cdot (x_2 + z_2)}{1000} \leq M_{2k,acc}$$

$$F_{2rad,acc*} \leq F_{2rad,acc}$$

$$F_{2ax*} \leq F_{2axN}$$

The values for $F_{2rad,acc}$ and $M_{2k,acc}$ can be found in the table "Permitted shaft loads" in this chapter.

For applications with multiple axial and/or radial forces, you must add the forces as vectors.

In the event of EMERGENCY OFF operation (max. 1000 load changes), you can multiply the permitted forces and torques for F_{2ax100}, $F_{2rad100}$ and M_{2k100} by a factor of two.

Also note the calculation for equivalent values:

$$M_{2k,eq^*} = \sqrt[3]{\frac{\left|n_{2m,1^*}\right| \cdot t_{1^*} \cdot \left|M_{2k,acc,1^*}{}^3\right| + \ldots + \left|n_{2m,n^*}\right| \cdot t_{n^*} \cdot \left|M_{2k,acc,n^*}{}^3\right|}{\left|n_{2m,1^*}\right| \cdot t_{1^*} + \ldots + \left|n_{2m,n^*}\right| \cdot t_{n^*}}} \leq M_{2kN}$$

$$F_{2rad,eq^*} = \sqrt[3]{\frac{\left|n_{2m,1^*}\right| \cdot t_{1^*} \cdot \left|F_{2rad,acc,1^*}{}^3\right| + \ldots + \left|n_{2m,n^*}\right| \cdot t_{n^*} \cdot \left|F_{2rad,acc,n^*}{}^3\right|}{\left|n_{2m,1^*}\right| \cdot t_{1^*} + \ldots + \left|n_{2m,n^*}\right| \cdot t_{n^*}}} \leq F_{2radN}$$

The following apply to the bearing service life L_{10h} ($ED_{10} \leq 40\%$):

$L_{10h} > 10000$ h with $1 < M_{2kN}/M_{2k^*} < 1.25$

$L_{10h} > 20000$ h with $1.25 < M_{2kN}/M_{2k^*} < 1.5$

$L_{10h} > 30000$ h with $1.5 < M_{2kN}/M_{2k^*}$

For different duty cycles:

$$L_{10h} > L_{10h(ED_{10}=40\%)} \cdot \frac{40\%}{ED_{10}}$$

2.6.3 Recommendation for radial shaft seal rings

For a duty cycle > 60% and higher surrounding temperatures, we recommend radial shaft seal rings made of FKM at the output.

Properties:

- Excellent temperature resistance
- High chemical stability
- Very good resistance to aging
- Excellent resistance in oils and greases
- For use in the food, beverage and pharmaceutical industries

Leak-proofness

Our gear units are equipped with high-quality radial shaft seal rings and checked for leaks. However, a leak cannot be fully ruled out over the length of use of a gear unit. If you use a gear unit with goods incompatible with the lubricant, you must take measures to prevent direct contact with the gear unit lubricant in case of a leak.

2.6.4 Reverse operation

To ensure lubrication for circulating gearing parts during cyclic reverse operation from ± 20° to ± 90° at the output, pay careful attention to the position of the output shaft for the horizontal mounting of the gear unit, as shown in the diagrams below. The images show the center position of reverse operation. Cyclic reverse operation ≤ ± 20° on request.

Solid shaft without feather key	Solid shaft with feather key
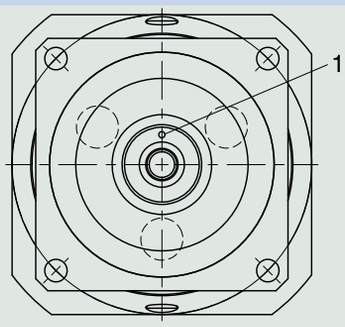	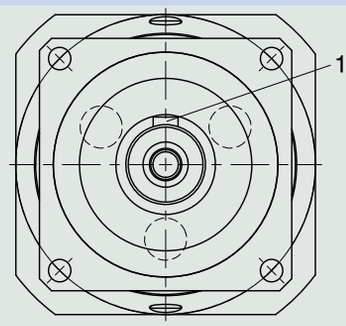
1 Position of the mark: top	1 Position of the feather key: top

Notes

- If you use the solid shaft without a feather key (G), you must note the position of the mark during assembly.
- As an alternative, you can use the solid shaft with a feather key (P). In that case, the feather key functions for position orientation. For a backlash-free connection, also use a clamp.

2.7 Additional documentation

Additional documentation related to the product can be found at
http://www.stoeber.de/en/downloads/

Enter the ID of the documentation in the Search... field.

Documentation	ID
Operating manual for P/PE/PH/PHQ/PHV planetary gear units and planetary geared motors	443149_en

3 PH planetary geared motors

Table of contents

3.1 Overview 46

3.2 Selection tables 47

3.3 Dimensional drawings 55

3.3.1 F shaft design (flange shaft) 56

3.4 Type designation 58

3.4.1 Type designation PH3 – PH8 58

3.4.2 Type designation PH9 – PH10 59

3.4.3 Nameplate 59

3.5 Product description 60

3.5.1 Input options 60

3.5.2 Installation conditions 60

3.5.3 Lubricants 60

3.5.4 Other product features 60

3.5.5 Direction of rotation 60

3.6 Project configuration 60

3.6.1 Calculation of the operating point 61

3.6.2 Permitted shaft loads for the output shaft 63

3.6.3 Recommendation for radial shaft seal rings 64

3.6.4 Reverse operation 65

3.7 Additional documentation 65

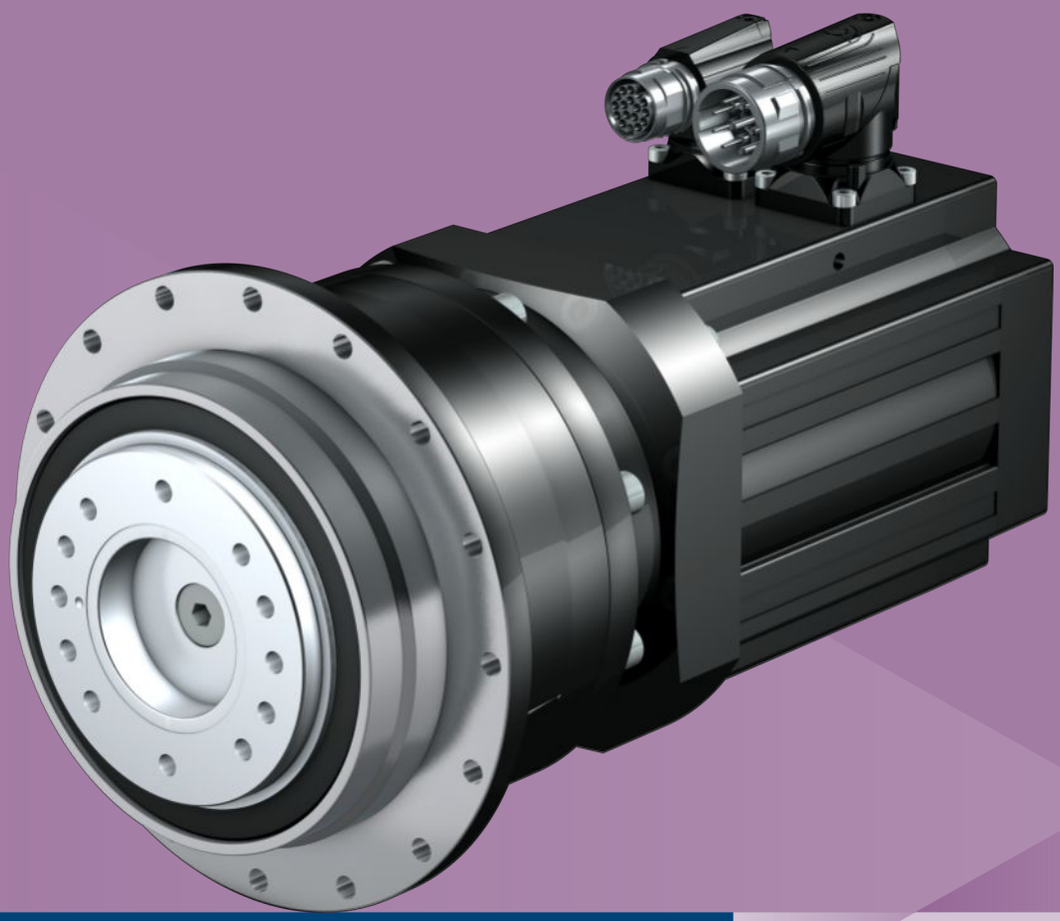

3 Planetary geared motors PH

3.1 Overview

High-performance precision planetary geared motors

Features

Power density	★★★★☆
Backlash	★★★★★
Price category	€€€
Shaft load	★★★★★
Smooth operation	★★★★☆
Torsional stiffness	★★★★☆
Mass moment of inertia	★★★★★
Helical gearing	✓
Maintenance-free	✓
Any mounting position	✓
Continuous operation without cooling	✓
Stiff output bearings due to pretension	✓
Reinforced output bearing (PH3 – PH5)	✓ (optional)
Compact and highly dynamic due to direct motor attachment	✓

Key ★☆☆☆☆ good | ★★★★★ excellent
€ Economy | €€€€€ Premium

Technical data

i	4 – 100
M_{2acc}	24 – 7500 Nm
$\Delta\phi_2$	1 – 4 arcmin
η_{get}	93 – 96 %

3.2 Selection tables

The technical data specified in the selection tables applies to:

- Installation altitudes up to 1000 m above sea level
- Surrounding temperatures from 0 °C to 40 °C
- Drives with convection-cooled motors (e.g. EZ401**U**)

For the technical data on drives with forced ventilated motors (e.g. EZ401**B**), refer to http://configurator.stoeber.de.

In the case of the version with a reinforced bearing and gear ratios ≤ 5, the maximum permitted input speed n_{1maxZB} is reduced. You can find values at http://configurator.stoeber.de

An explanation of the formula symbols can be found in Chapter [▸ 23.1].

n_{2N} [rpm]	M_{2N} [Nm]	$M_{2,0}$ [Nm]	a_{th}	S	Type	M_{2acc} [Nm]	M_{2accHT} [Nm]	M_{2NOT} [Nm]	i	i_{exakt}	n_{1maxDB} [rpm]	n_{1maxZB} [rpm]	J_1 [kgcm²]	$\Delta\varphi_2$ [arcmin]	$\Delta\varphi_{2red}$ [arcmin]	C_2 [Nm/ arcmin]	m [kg]
PH3 (n_{1N} = 3000 rpm, $M_{2acc,max}$ = 80 Nm)																	
60	43	44	1.4	1.2	PH332_0500 EZ301U	75	75	150	50.00	50/1	6000	8000	0.22	4.0	2.0	12	3.2
75	35	35	1.5	1.4	PH332_0400 EZ301U	67	67	130	40.00	40/1	6000	8000	0.23	4.0	2.0	9.0	3.2
86	30	31	1.6	1.7	PH332_0350 EZ301U	80	85	160	35.00	35/1	6000	8000	0.22	4.0	2.0	14	3.2
107	24	25	1.8	2.1	PH332_0280 EZ301U	73	73	150	28.00	28/1	6000	8000	0.23	4.0	2.0	12	3.2
107	41	44	3.1	1.2	PH332_0280 EZ302U	75	75	150	28.00	28/1	6000	8000	0.33	4.0	2.0	12	3.8
120	22	22	1.9	2.3	PH332_0250 EZ301U	65	65	160	25.00	25/1	6000	8000	0.22	4.0	2.0	14	3.2
120	37	39	3.3	1.4	PH332_0250 EZ302U	80	85	160	25.00	25/1	6000	8000	0.32	4.0	2.0	14	3.8
120	48	51	4.3	1.0	PH332_0250 EZ303U	80	85	160	25.00	25/1	6000	8000	0.43	4.0	2.0	14	4.3
150	17	18	2.4	2.6	PH332_0200 EZ301U	52	52	160	20.00	20/1	5500	8000	0.24	4.0	2.0	14	3.2
150	30	31	4.1	1.5	PH332_0200 EZ302U	80	85	160	20.00	20/1	5500	8000	0.34	4.0	2.0	14	3.8
150	39	41	5.4	1.2	PH332_0200 EZ303U	80	85	160	20.00	20/1	5500	8000	0.45	4.0	2.0	14	4.3
300	8.9	9.1	1.5	3.2	PH331_0100 EZ301U	27	27	120	10.00	10/1	5500	8000	0.21	4.0	2.0	9.2	2.7
300	15	16	2.6	1.9	PH331_0100 EZ302U	48	48	120	10.00	10/1	5500	8000	0.31	4.0	2.0	9.2	3.3
300	20	21	3.3	1.4	PH331_0100 EZ303U	60	60	120	10.00	10/1	5500	8000	0.42	4.0	2.0	9.2	3.8
300	27	29	4.5	1.1	PH331_0100 EZ401U	60	60	120	10.00	10/1	5500	8000	0.95	4.0	2.0	9.2	5.2
429	11	11	2.9	3.7	PH331_0070 EZ302U	34	34	150	7.000	7/1	5000	8000	0.33	4.0	2.0	13	3.3
429	14	15	3.7	2.8	PH331_0070 EZ303U	47	47	150	7.000	7/1	5000	8000	0.44	4.0	2.0	13	3.8
429	19	20	5.0	2.1	PH331_0070 EZ401U	57	57	150	7.000	7/1	5000	8000	0.97	4.0	2.0	13	5.2
429	32	35	8.4	1.2	PH331_0070 EZ402U	75	77	150	7.000	7/1	5000	8000	1.7	4.0	2.0	13	6.3
600	9.9	11	5.6	4.0	PH331_0050 EZ303U	34	34	160	5.000	5/1	4000	8000	0.48	4.0	2.0	15	3.8
600	13	14	7.5	2.9	PH331_0050 EZ401U	41	41	160	5.000	5/1	4000	8000	1.0	4.0	2.0	15	5.2
600	23	25	13	1.7	PH331_0050 EZ402U	77	77	160	5.000	5/1	4000	8000	1.7	4.0	2.0	15	6.3
PH3 (n_{1N} = 6000 rpm, $M_{2acc,max}$ = 80 Nm)																	
150	33	35	1.8	1.2	PH332_0400 EZ301U	67	67	130	40.00	40/1	6000	8000	0.23	4.0	2.0	9.0	3.2
171	29	31	1.7	1.6	PH332_0350 EZ301U	80	85	160	35.00	35/1	6000	8000	0.22	4.0	2.0	14	3.2
214	23	25	2.1	1.8	PH332_0280 EZ301U	73	73	150	28.00	28/1	6000	8000	0.23	4.0	2.0	12	3.2
214	39	44	3.6	1.1	PH332_0280 EZ302U	75	75	150	28.00	28/1	6000	8000	0.33	4.0	2.0	12	3.8
240	21	22	2.1	2.2	PH332_0250 EZ301U	65	65	160	25.00	25/1	6000	8000	0.22	4.0	2.0	14	3.2
240	35	39	3.5	1.3	PH332_0250 EZ302U	80	85	160	25.00	25/1	6000	8000	0.32	4.0	2.0	14	3.8
300	17	18	2.7	2.3	PH332_0200 EZ301U	52	52	160	20.00	20/1	5500	8000	0.24	4.0	2.0	14	3.2
300	28	31	4.6	1.4	PH332_0200 EZ302U	80	85	160	20.00	20/1	5500	8000	0.34	4.0	2.0	14	3.8
300	36	42	6.0	1.0	PH332_0200 EZ303U	80	85	160	20.00	20/1	5500	8000	0.45	4.0	2.0	14	4.3
600	8.5	9.1	1.8	2.7	PH331_0100 EZ301U	27	27	120	10.00	10/1	5500	8000	0.21	4.0	2.0	9.2	2.7
600	14	16	3.0	1.6	PH331_0100 EZ302U	48	48	120	10.00	10/1	5500	8000	0.31	4.0	2.0	9.2	3.3
600	19	22	4.0	1.2	PH331_0100 EZ303U	60	60	120	10.00	10/1	5500	8000	0.42	4.0	2.0	9.2	3.8
600	22	27	4.7	1.0	PH331_0100 EZ401U	60	60	120	10.00	10/1	5500	8000	0.95	4.0	2.0	9.2	5.2
857	10	11	3.4	3.1	PH331_0070 EZ302U	34	34	150	7.000	7/1	5000	8000	0.33	4.0	2.0	13	3.3
857	13	15	4.4	2.4	PH331_0070 EZ303U	47	47	150	7.000	7/1	5000	8000	0.44	4.0	2.0	13	3.8
857	15	19	5.2	2.0	PH331_0070 EZ401U	57	57	150	7.000	7/1	5000	8000	0.97	4.0	2.0	13	5.2
857	24	33	7.9	1.3	PH331_0070 EZ402U	75	77	150	7.000	7/1	5000	8000	1.7	4.0	2.0	13	6.3
1200	7.2	8.1	5.1	4.3	PH331_0050 EZ302U	24	24	160	5.000	5/1	4000	8000	0.37	4.0	2.0	15	3.3
1200	9.4	11	6.6	3.3	PH331_0050 EZ303U	34	34	160	5.000	5/1	4000	8000	0.48	4.0	2.0	15	3.8
1200	11	13	7.8	2.8	PH331_0050 EZ401U	41	41	160	5.000	5/1	4000	8000	1.0	4.0	2.0	15	5.2
1200	17	24	12	1.9	PH331_0050 EZ402U	77	77	160	5.000	5/1	4000	8000	1.7	4.0	2.0	15	6.3
PH4 (n_{1N} = 3000 rpm, $M_{2acc,max}$ = 170 Nm)																	
43	61	62	0.6	1.8	PH432_0700 EZ301U	160	160	320	70.00	70/1	4500	8000	0.23	3.0	1.0	27	5.7
43	104	109	1.0	1.0	PH432_0700 EZ302U	160	160	320	70.00	70/1	4500	8000	0.33	3.0	1.0	27	6.3
60	43	44	0.7	2.5	PH432_0500 EZ301U	130	130	320	50.00	50/1	4500	8000	0.26	3.0	1.0	31	5.7
60	74	78	1.2	1.4	PH432_0500 EZ302U	160	170	320	50.00	50/1	4500	8000	0.36	3.0	1.0	31	6.3
60	96	102	1.6	1.1	PH432_0500 EZ303U	160	170	320	50.00	50/1	4500	8000	0.47	3.0	1.0	31	6.8

n_{2N} [rpm]	M_{2N} [Nm]	$M_{2,0}$ [Nm]	a_{th}	S	Type	M_{2acc} [Nm]	M_{2accHT} [Nm]	M_{2NOT} [Nm]	i	i_{exakt}	n_{1maxDB} [rpm]	n_{1maxZB} [rpm]	J_1 [kgcm²]	$\Delta\varphi_2$ [arcmin]	$\Delta\varphi_{2red}$ [arcmin]	C_2 [Nm/ arcmin]	m [kg]
PH4 (n_{1N} = 3000 rpm, $M_{2acc,max}$ = 170 Nm)																	
75	35	35	0.8	2.9	PH432_0400 EZ301U	100	100	310	40.00	40/1	4500	8000	0.30	3.0	1.0	30	5.7
75	59	62	1.4	1.7	PH432_0400 EZ302U	160	170	310	40.00	40/1	4500	8000	0.40	3.0	1.0	30	6.3
75	77	81	1.9	1.3	PH432_0400 EZ303U	160	170	310	40.00	40/1	4500	8000	0.51	3.0	1.0	30	6.8
86	30	31	0.9	3.5	PH432_0350 EZ301U	91	91	320	35.00	35/1	4500	8000	0.27	3.0	1.0	32	5.7
86	52	55	1.5	2.1	PH432_0350 EZ302U	160	160	320	35.00	35/1	4500	8000	0.37	3.0	1.0	32	6.3
86	67	71	1.9	1.6	PH432_0350 EZ303U	160	170	320	35.00	35/1	4500	8000	0.48	3.0	1.0	32	6.8
86	91	98	2.6	1.2	PH432_0350 EZ401U	160	170	320	35.00	35/1	4500	8000	1.0	3.0	1.0	32	8.2
107	24	25	1.1	3.9	PH432_0280 EZ301U	73	73	310	28.00	28/1	4500	8000	0.31	3.0	1.0	31	5.7
107	41	44	1.9	2.3	PH432_0280 EZ302U	130	130	310	28.00	28/1	4500	8000	0.41	3.0	1.0	31	6.3
107	54	57	2.4	1.8	PH432_0280 EZ303U	160	170	310	28.00	28/1	4500	8000	0.52	3.0	1.0	31	6.8
107	73	78	3.3	1.3	PH432_0280 EZ401U	160	170	310	28.00	28/1	4500	8000	1.0	3.0	1.0	31	8.2
120	22	22	1.1	4.6	PH432_0250 EZ301U	65	65	320	25.00	25/1	4500	8000	0.27	3.0	1.0	32	5.7
120	37	39	1.9	2.7	PH432_0250 EZ302U	120	120	320	25.00	25/1	4500	8000	0.37	3.0	1.0	32	6.3
120	48	51	2.4	2.1	PH432_0250 EZ303U	160	160	320	25.00	25/1	4500	8000	0.48	3.0	1.0	32	6.8
120	65	70	3.3	1.5	PH432_0250 EZ401U	160	170	320	25.00	25/1	4500	8000	1.0	3.0	1.0	32	8.2
150	30	31	2.2	3.2	PH432_0200 EZ302U	93	93	300	20.00	20/1	4000	8000	0.38	3.0	1.0	32	6.3
150	39	41	2.9	2.5	PH432_0200 EZ303U	130	130	300	20.00	20/1	4000	8000	0.49	3.0	1.0	32	6.8
150	52	56	3.9	1.8	PH432_0200 EZ401U	150	150	300	20.00	20/1	4000	8000	1.0	3.0	1.0	32	8.2
150	87	97	6.5	1.1	PH432_0200 EZ402U	150	150	300	20.00	20/1	4000	8000	1.7	3.0	1.0	32	9.3
188	24	25	2.6	3.8	PH432_0160 EZ302U	74	74	310	16.00	16/1	4000	8000	0.43	3.0	1.0	31	6.3
188	31	33	3.4	2.9	PH432_0160 EZ303U	100	100	310	16.00	16/1	4000	8000	0.54	3.0	1.0	31	6.8
188	42	45	4.6	2.2	PH432_0160 EZ401U	130	130	310	16.00	16/1	4000	8000	1.1	3.0	1.0	31	8.2
188	70	77	7.6	1.3	PH432_0160 EZ402U	160	170	310	16.00	16/1	4000	8000	1.8	3.0	1.0	31	9.3
300	27	29	2.4	2.2	PH431_0100 EZ401U	82	82	230	10.00	10/1	3500	7000	1.0	3.0	1.0	21	7.0
300	41	45	3.7	1.4	PH431_0100 EZ501U	120	120	230	10.00	10/1	3500	7000	3.0	3.0	1.0	21	8.0
300	45	50	4.1	1.3	PH431_0100 EZ402U	120	120	230	10.00	10/1	3500	7000	1.7	3.0	1.0	21	8.1
429	19	20	3.0	3.9	PH431_0070 EZ401U	57	57	320	7.000	7/1	3200	6000	1.1	3.0	1.0	31	7.0
429	29	32	4.6	2.6	PH431_0070 EZ501U	110	110	320	7.000	7/1	3200	6000	3.1	3.0	1.0	31	8.0
429	32	35	5.0	2.4	PH431_0070 EZ402U	110	110	320	7.000	7/1	3200	6000	1.8	3.0	1.0	31	8.1
429	46	58	7.4	1.6	PH431_0070 EZ404U	160	180	320	7.000	7/1	3200	6000	3.1	3.0	1.0	31	10
429	50	54	7.9	1.5	PH431_0070 EZ502U	160	180	320	7.000	7/1	3200	6000	5.4	3.0	1.0	31	9.5
429	65	75	10	1.1	PH431_0070 EZ503U	160	180	320	7.000	7/1	3200	6000	7.7	3.0	1.0	31	11
600	21	23	6.9	3.6	PH431_0050 EZ501U	77	77	340	5.000	5/1	3000	6000	3.2	3.0	1.0	37	8.0
600	23	25	7.5	3.3	PH431_0050 EZ402U	77	77	340	5.000	5/1	3000	6000	1.9	3.0	1.0	37	8.1
600	33	41	11	2.2	PH431_0050 EZ404U	140	140	340	5.000	5/1	3000	6000	3.3	3.0	1.0	37	10
600	36	38	12	2.1	PH431_0050 EZ502U	150	150	340	5.000	5/1	3000	6000	5.5	3.0	1.0	37	9.5
600	47	53	16	1.6	PH431_0050 EZ503U	170	190	340	5.000	5/1	3000	6000	7.9	3.0	1.0	37	11
600	65	77	22	1.1	PH431_0050 EZ505U	170	190	340	5.000	5/1	3000	6000	12	3.0	1.0	37	14
750	17	18	9.0	4.5	PH431_0040 EZ501U	61	61	270	4.000	4/1	2600	5000	3.4	3.0	1.0	39	8.0
750	18	20	9.8	4.1	PH431_0040 EZ402U	61	61	270	4.000	4/1	2600	5000	2.1	3.0	1.0	39	8.1
750	26	33	14	2.8	PH431_0040 EZ404U	110	110	270	4.000	4/1	2600	5000	3.5	3.0	1.0	39	10
750	28	31	15	2.6	PH431_0040 EZ502U	120	120	270	4.000	4/1	2600	5000	5.7	3.0	1.0	39	9.5
750	37	43	20	2.0	PH431_0040 EZ503U	140	170	270	4.000	4/1	2600	5000	8.1	3.0	1.0	39	11
750	52	61	28	1.4	PH431_0040 EZ505U	140	190	270	4.000	4/1	2600	5000	13	3.0	1.0	39	14
PH4 (n_{1N} = 4500 rpm, $M_{2acc,max}$ = 170 Nm)																	
643	64	103	12	1.0	PH431_0070 EZ505U	160	180	320	7.000	7/1	3200	6000	12	3.0	1.0	31	14
900	46	73	17	1.4	PH431_0050 EZ505U	170	190	340	5.000	5/1	3000	6000	12	3.0	1.0	37	14
1125	36	59	23	1.8	PH431_0040 EZ505U	140	190	270	4.000	4/1	2600	5000	13	3.0	1.0	39	14
PH4 (n_{1N} = 6000 rpm, $M_{2acc,max}$ = 170 Nm)																	
86	58	62	0.7	1.5	PH432_0700 EZ301U	160	160	320	70.00	70/1	4500	8000	0.23	3.0	1.0	27	5.7
120	41	44	0.9	2.1	PH432_0500 EZ301U	130	130	320	50.00	50/1	4500	8000	0.26	3.0	1.0	31	5.7
120	70	78	1.5	1.2	PH432_0500 EZ302U	160	170	320	50.00	50/1	4500	8000	0.36	3.0	1.0	31	6.3
150	33	35	1.0	2.4	PH432_0400 EZ301U	100	100	310	40.00	40/1	4500	8000	0.30	3.0	1.0	30	5.7
150	56	62	1.7	1.4	PH432_0400 EZ302U	160	170	310	40.00	40/1	4500	8000	0.40	3.0	1.0	30	6.3
150	73	84	2.2	1.1	PH432_0400 EZ303U	160	170	310	40.00	40/1	4500	8000	0.51	3.0	1.0	30	6.8
171	29	31	1.0	2.9	PH432_0350 EZ301U	91	91	320	35.00	35/1	4500	8000	0.27	3.0	1.0	32	5.7
171	49	55	1.7	1.7	PH432_0350 EZ302U	160	160	320	35.00	35/1	4500	8000	0.37	3.0	1.0	32	6.3
171	64	73	2.3	1.3	PH432_0350 EZ303U	160	170	320	35.00	35/1	4500	8000	0.48	3.0	1.0	32	6.8
171	75	91	2.7	1.1	PH432_0350 EZ401U	160	170	320	35.00	35/1	4500	8000	1.0	3.0	1.0	32	8.2
214	23	25	1.2	3.7	PH432_0280 EZ301U	73	73	310	28.00	28/1	4500	8000	0.31	3.0	1.0	31	5.7
214	39	44	2.0	2.2	PH432_0280 EZ302U	130	130	310	28.00	28/1	4500	8000	0.41	3.0	1.0	31	6.3
214	51	59	2.6	1.7	PH432_0280 EZ303U	160	170	310	28.00	28/1	4500	8000	0.52	3.0	1.0	31	6.8
214	60	73	3.0	1.4	PH432_0280 EZ401U	160	170	310	28.00	28/1	4500	8000	1.0	3.0	1.0	31	8.2
240	21	22	1.2	4.1	PH432_0250 EZ301U	65	65	320	25.00	25/1	4500	8000	0.27	3.0	1.0	32	5.7
240	35	39	2.1	2.4	PH432_0250 EZ302U	120	120	320	25.00	25/1	4500	8000	0.37	3.0	1.0	32	6.3

n_{2N} [rpm]	M_{2N} [Nm]	$M_{2,0}$ [Nm]	a_{th}	S	Type	M_{2acc} [Nm]	M_{2accHT} [Nm]	M_{2NOT} [Nm]	i	i_{exakt}	n_{1maxDB} [rpm]	n_{1maxZB} [rpm]	J_1 [kgcm²]	$\Delta\varphi_2$ [arcmin]	$\Delta\varphi_{2red}$ [arcmin]	C_2 [Nm/ arcmin]	m [kg]
PH4 (n_{1N} = 6000 rpm, $M_{2acc,max}$ = 170 Nm)																	
240	46	52	2.7	1.9	PH432_0250 EZ303U	160	160	320	25.00	25/1	4500	8000	0.48	3.0	1.0	32	6.8
240	53	65	3.2	1.6	PH432_0250 EZ401U	160	170	320	25.00	25/1	4500	8000	1.0	3.0	1.0	32	8.2
240	81	114	4.8	1.0	PH432_0250 EZ402U	160	170	320	25.00	25/1	4500	8000	1.7	3.0	1.0	32	9.3
300	28	31	2.3	3.0	PH432_0200 EZ302U	93	93	300	20.00	20/1	4000	8000	0.38	3.0	1.0	32	6.3
300	36	42	3.0	2.3	PH432_0200 EZ303U	130	130	300	20.00	20/1	4000	8000	0.49	3.0	1.0	32	6.8
300	43	52	3.5	2.0	PH432_0200 EZ401U	150	150	300	20.00	20/1	4000	8000	1.0	3.0	1.0	32	8.2
300	65	91	5.4	1.3	PH432_0200 EZ402U	150	150	300	20.00	20/1	4000	8000	1.7	3.0	1.0	32	9.3
375	22	25	2.8	3.5	PH432_0160 EZ302U	74	74	310	16.00	16/1	4000	8000	0.43	3.0	1.0	31	6.3
375	29	33	3.6	2.7	PH432_0160 EZ303U	100	100	310	16.00	16/1	4000	8000	0.54	3.0	1.0	31	6.8
375	34	42	4.3	2.3	PH432_0160 EZ401U	130	130	310	16.00	16/1	4000	8000	1.1	3.0	1.0	31	8.2
375	52	73	6.5	1.5	PH432_0160 EZ402U	160	170	310	16.00	16/1	4000	8000	1.8	3.0	1.0	31	9.3
600	22	27	2.5	2.1	PH431_0100 EZ401U	82	82	230	10.00	10/1	3500	7000	1.0	3.0	1.0	21	7.0
600	33	42	3.7	1.4	PH431_0100 EZ501U	120	120	230	10.00	10/1	3500	7000	3.0	3.0	1.0	21	8.0
600	34	47	3.8	1.4	PH431_0100 EZ402U	120	120	230	10.00	10/1	3500	7000	1.7	3.0	1.0	21	8.1
857	15	19	3.1	3.8	PH431_0070 EZ401U	57	57	320	7.000	7/1	3200	6000	1.1	3.0	1.0	31	7.0
857	23	30	4.6	2.6	PH431_0070 EZ501U	110	110	320	7.000	7/1	3200	6000	3.1	3.0	1.0	31	8.0
857	24	33	4.7	2.5	PH431_0070 EZ402U	110	110	320	7.000	7/1	3200	6000	1.8	3.0	1.0	31	8.1
857	35	52	7.0	1.7	PH431_0070 EZ502U	160	180	320	7.000	7/1	3200	6000	5.4	3.0	1.0	31	9.5
857	39	56	7.8	1.5	PH431_0070 EZ404U	160	180	320	7.000	7/1	3200	6000	3.1	3.0	1.0	31	10
857	42	71	8.4	1.4	PH431_0070 EZ503U	160	180	320	7.000	7/1	3200	6000	7.7	3.0	1.0	31	11
1200	16	21	6.9	3.6	PH431_0050 EZ501U	77	77	340	5.000	5/1	3000	6000	3.2	3.0	1.0	37	8.0
1200	17	24	7.1	3.5	PH431_0050 EZ402U	77	77	340	5.000	5/1	3000	6000	1.9	3.0	1.0	37	8.1
1200	25	37	10	2.4	PH431_0050 EZ502U	150	150	340	5.000	5/1	3000	6000	5.5	3.0	1.0	37	9.5
1200	28	40	12	2.1	PH431_0050 EZ404U	140	140	340	5.000	5/1	3000	6000	3.3	3.0	1.0	37	10
1200	30	51	13	2.0	PH431_0050 EZ503U	170	190	340	5.000	5/1	3000	6000	7.9	3.0	1.0	37	11
PH5 (n_{1N} = 3000 rpm, $M_{2acc,max}$ = 390 Nm)																	
43	182	195	0.8	1.5	PH532_0700 EZ401U	370	390	710	70.00	70/1	4000	8000	1.0	3.0	1.0	70	11
60	130	140	1.0	2.0	PH532_0500 EZ401U	390	400	710	50.00	50/1	4000	8000	1.1	3.0	1.0	79	11
60	200	219	1.6	1.3	PH532_0500 EZ501U	390	400	710	50.00	50/1	4000	8000	3.1	3.0	1.0	79	12
60	219	242	1.7	1.2	PH532_0500 EZ402U	390	400	710	50.00	50/1	4000	8000	1.8	3.0	1.0	79	12
75	104	112	1.4	2.0	PH532_0400 EZ401U	320	320	700	40.00	40/1	4000	8000	1.2	3.0	1.0	74	11
75	160	175	2.1	1.3	PH532_0400 EZ501U	360	360	700	40.00	40/1	4000	8000	3.2	3.0	1.0	74	12
75	175	193	2.3	1.2	PH532_0400 EZ402U	360	360	700	40.00	40/1	4000	8000	1.9	3.0	1.0	74	12
86	91	98	1.2	2.9	PH532_0350 EZ401U	280	280	710	35.00	35/1	4000	8000	1.1	3.0	1.0	84	11
86	140	153	1.8	1.9	PH532_0350 EZ501U	390	400	710	35.00	35/1	4000	8000	3.1	3.0	1.0	84	12
86	153	169	2.0	1.7	PH532_0350 EZ402U	390	400	710	35.00	35/1	4000	8000	1.8	3.0	1.0	84	12
86	225	280	2.9	1.2	PH532_0350 EZ404U	390	400	710	35.00	35/1	4000	8000	3.2	3.0	1.0	84	14
86	241	260	3.1	1.1	PH532_0350 EZ502U	390	400	710	35.00	35/1	4000	8000	5.4	3.0	1.0	84	13
107	73	78	1.4	3.3	PH532_0280 EZ401U	220	220	700	28.00	28/1	4000	8000	1.2	3.0	1.0	80	11
107	112	122	2.2	2.1	PH532_0280 EZ501U	360	390	700	28.00	28/1	4000	8000	3.2	3.0	1.0	80	12
107	122	135	2.4	2.0	PH532_0280 EZ402U	360	390	700	28.00	28/1	4000	8000	1.9	3.0	1.0	80	12
107	180	224	3.5	1.3	PH532_0280 EZ404U	360	390	700	28.00	28/1	4000	8000	3.3	3.0	1.0	80	14
107	193	208	3.8	1.2	PH532_0280 EZ502U	360	390	700	28.00	28/1	4000	8000	5.5	3.0	1.0	80	13
120	65	70	1.4	4.0	PH532_0250 EZ401U	200	200	710	25.00	25/1	3700	7500	1.1	3.0	1.0	85	11
120	100	109	2.2	2.6	PH532_0250 EZ501U	370	370	710	25.00	25/1	3700	7500	3.1	3.0	1.0	85	12
120	109	121	2.4	2.4	PH532_0250 EZ402U	370	370	710	25.00	25/1	3700	7500	1.8	3.0	1.0	85	12
120	160	200	3.5	1.6	PH532_0250 EZ404U	390	400	710	25.00	25/1	3700	7500	3.2	3.0	1.0	85	14
120	172	186	3.7	1.5	PH532_0250 EZ502U	390	400	710	25.00	25/1	3700	7500	5.4	3.0	1.0	85	13
120	226	258	4.9	1.2	PH532_0250 EZ503U	390	400	710	25.00	25/1	3700	7500	7.8	3.0	1.0	85	15
150	52	56	1.6	4.8	PH532_0200 EZ401U	160	160	710	20.00	20/1	3500	7000	1.2	3.0	1.0	86	11
150	80	87	2.5	3.1	PH532_0200 EZ501U	300	300	710	20.00	20/1	3500	7000	3.1	3.0	1.0	86	12
150	87	97	2.7	2.9	PH532_0200 EZ402U	300	300	710	20.00	20/1	3500	7000	1.9	3.0	1.0	86	12
150	128	160	4.0	1.9	PH532_0200 EZ404U	370	390	710	20.00	20/1	3500	7000	3.2	3.0	1.0	86	14
150	138	149	4.3	1.8	PH532_0200 EZ502U	370	390	710	20.00	20/1	3500	7000	5.4	3.0	1.0	86	13
150	180	206	5.6	1.4	PH532_0200 EZ503U	370	390	710	20.00	20/1	3500	7000	7.8	3.0	1.0	86	15
188	64	70	3.0	3.6	PH532_0160 EZ501U	240	240	700	16.00	16/1	3500	7000	3.3	3.0	1.0	83	12
188	70	77	3.3	3.3	PH532_0160 EZ402U	240	240	700	16.00	16/1	3500	7000	2.0	3.0	1.0	83	12
188	103	128	4.9	2.2	PH532_0160 EZ404U	360	360	700	16.00	16/1	3500	7000	3.3	3.0	1.0	83	14
188	110	119	5.2	2.1	PH532_0160 EZ502U	360	360	700	16.00	16/1	3500	7000	5.6	3.0	1.0	83	13
188	144	165	6.9	1.6	PH532_0160 EZ503U	360	360	700	16.00	16/1	3500	7000	7.9	3.0	1.0	83	15
188	201	238	9.6	1.1	PH532_0160 EZ505U	360	360	700	16.00	16/1	3500	7000	13	3.0	1.0	83	18
300	41	45	1.7	3.5	PH531_0100 EZ501U	150	150	580	10.00	10/1	3300	6500	3.2	3.0	1.0	53	9.9
300	71	77	3.0	2.0	PH531_0100 EZ502U	290	290	580	10.00	10/1	3300	6500	5.5	3.0	1.0	53	11
300	71	80	3.0	2.0	PH531_0100 EZ701U	190	190	580	10.00	10/1	3300	6500	8.8	3.0	1.0	53	13
300	93	107	3.9	1.5	PH531_0100 EZ503U	290	290	580	10.00	10/1	3300	6500	7.8	3.0	1.0	53	13

n_{2N} [rpm]	M_{2N} [Nm]	$M_{2,0}$ [Nm]	a_{th}	S	Type	M_{2acc} [Nm]	M_{2accHT} [Nm]	M_{2NOT} [Nm]	i	i_{exakt}	n_{1maxDB} [rpm]	n_{1maxZB} [rpm]	J_1 [kgcm²]	$\Delta\varphi_2$ [arcmin]	$\Delta\varphi_{2red}$ [arcmin]	C_2 [Nm/ arcmin]	m [kg]
PH5 (n_{1N} = 3000 rpm, $M_{2acc,max}$ = 390 Nm)																	
300	115	138	4.8	1.2	PH531_0100 EZ702U	290	290	580	10.00	10/1	3300	6500	14	3.0	1.0	53	16
300	130	154	5.4	1.1	PH531_0100 EZ505U	290	290	580	10.00	10/1	3300	6500	12	3.0	1.0	53	16
429	50	54	3.6	3.7	PH531_0070 EZ502U	210	210	710	7.000	7/1	3000	6000	5.8	3.0	1.0	77	11
429	50	56	3.6	3.7	PH531_0070 EZ701U	130	130	710	7.000	7/1	3000	6000	9.1	3.0	1.0	77	13
429	65	75	4.7	2.8	PH531_0070 EZ503U	290	290	710	7.000	7/1	3000	6000	8.1	3.0	1.0	77	13
429	81	97	5.8	2.3	PH531_0070 EZ702U	280	280	710	7.000	7/1	3000	6000	14	3.0	1.0	77	16
429	91	108	6.5	2.0	PH531_0070 EZ505U	370	390	710	7.000	7/1	3000	6000	13	3.0	1.0	77	16
429	111	140	7.9	1.7	PH531_0070 EZ703U	370	390	710	7.000	7/1	3000	6000	22	3.0	1.0	77	18
429	143	203	10	1.3	PH531_0070 EZ705U	370	390	710	7.000	7/1	3000	6000	35	3.0	1.0	77	23
600	47	53	7.0	3.9	PH531_0050 EZ503U	210	210	560	5.000	5/1	2500	5500	8.6	3.0	1.0	97	13
600	58	69	8.6	3.2	PH531_0050 EZ702U	200	200	710	5.000	5/1	2500	5500	15	3.0	1.0	97	16
600	65	77	9.7	2.8	PH531_0050 EZ505U	320	320	560	5.000	5/1	2500	5500	13	3.0	1.0	97	16
600	79	100	12	2.3	PH531_0050 EZ703U	310	310	710	5.000	5/1	2500	5500	23	3.0	1.0	97	18
600	102	145	15	1.8	PH531_0050 EZ705U	390	400	710	5.000	5/1	2500	5500	35	3.0	1.0	97	23
750	37	43	9.1	4.9	PH531_0040 EZ503U	170	170	450	4.000	4/1	2200	5000	9.2	3.0	1.0	100	13
750	46	55	11	4.0	PH531_0040 EZ702U	160	160	700	4.000	4/1	2200	5000	15	3.0	1.0	100	16
750	52	61	13	3.5	PH531_0040 EZ505U	260	260	450	4.000	4/1	2200	5000	14	3.0	1.0	100	16
750	63	80	16	2.9	PH531_0040 EZ703U	250	250	700	4.000	4/1	2200	5000	23	3.0	1.0	100	18
750	82	116	20	2.2	PH531_0040 EZ705U	360	390	700	4.000	4/1	2200	5000	36	3.0	1.0	100	23
PH5 (n_{1N} = 4500 rpm, $M_{2acc,max}$ = 390 Nm)																	
225	177	285	6.0	1.3	PH532_0200 EZ505U	370	390	710	20.00	20/1	3500	7000	12	3.0	1.0	86	18
281	141	228	7.2	1.5	PH532_0160 EZ505U	360	360	700	16.00	16/1	3500	7000	13	3.0	1.0	83	18
450	91	147	4.4	1.4	PH531_0100 EZ505U	290	290	580	10.00	10/1	3300	6500	12	3.0	1.0	53	16
450	116	192	5.6	1.1	PH531_0100 EZ703U	290	290	580	10.00	10/1	3300	6500	22	3.0	1.0	53	18
643	64	103	5.2	2.5	PH531_0070 EZ505U	370	390	710	7.000	7/1	3000	6000	13	3.0	1.0	77	16
643	81	134	6.7	2.0	PH531_0070 EZ703U	370	390	710	7.000	7/1	3000	6000	22	3.0	1.0	77	18
643	110	202	9.0	1.5	PH531_0070 EZ705U	370	390	710	7.000	7/1	3000	6000	35	3.0	1.0	77	23
900	46	73	7.8	3.5	PH531_0050 EZ505U	320	320	560	5.000	5/1	2500	5500	13	3.0	1.0	97	16
900	58	96	10	2.8	PH531_0050 EZ703U	310	310	710	5.000	5/1	2500	5500	23	3.0	1.0	97	18
900	79	144	14	2.0	PH531_0050 EZ705U	390	400	710	5.000	5/1	2500	5500	35	3.0	1.0	97	23
1125	36	59	10	4.4	PH531_0040 EZ505U	260	260	450	4.000	4/1	2200	5000	14	3.0	1.0	100	16
1125	46	77	13	3.4	PH531_0040 EZ703U	250	250	700	4.000	4/1	2200	5000	23	3.0	1.0	100	18
1125	63	115	18	2.5	PH531_0040 EZ705U	360	390	700	4.000	4/1	2200	5000	36	3.0	1.0	100	23
PH5 (n_{1N} = 6000 rpm, $M_{2acc,max}$ = 390 Nm)																	
86	150	182	0.9	1.4	PH532_0700 EZ401U	370	390	710	70.00	70/1	4000	8000	1.0	3.0	1.0	70	11
120	107	130	1.0	1.9	PH532_0500 EZ401U	390	400	710	50.00	50/1	4000	8000	1.1	3.0	1.0	79	11
120	158	205	1.6	1.3	PH532_0500 EZ501U	390	400	710	50.00	50/1	4000	8000	3.1	3.0	1.0	79	12
120	163	228	1.6	1.2	PH532_0500 EZ402U	390	400	710	50.00	50/1	4000	8000	1.8	3.0	1.0	79	12
150	86	104	1.4	1.9	PH532_0400 EZ401U	320	320	700	40.00	40/1	4000	8000	1.2	3.0	1.0	74	11
150	126	164	2.1	1.3	PH532_0400 EZ501U	360	360	700	40.00	40/1	4000	8000	3.2	3.0	1.0	74	12
150	130	182	2.2	1.3	PH532_0400 EZ402U	360	360	700	40.00	40/1	4000	8000	1.9	3.0	1.0	74	12
171	75	91	1.2	2.8	PH532_0350 EZ401U	280	280	710	35.00	35/1	4000	8000	1.1	3.0	1.0	84	11
171	111	143	1.8	1.9	PH532_0350 EZ501U	390	400	710	35.00	35/1	4000	8000	3.1	3.0	1.0	84	12
171	114	159	1.8	1.8	PH532_0350 EZ402U	390	400	710	35.00	35/1	4000	8000	1.8	3.0	1.0	84	12
171	169	254	2.7	1.2	PH532_0350 EZ502U	390	400	710	35.00	35/1	4000	8000	5.4	3.0	1.0	84	13
171	189	273	3.0	1.1	PH532_0350 EZ404U	390	400	710	35.00	35/1	4000	8000	3.2	3.0	1.0	84	14
214	60	73	1.4	3.4	PH532_0280 EZ401U	220	220	700	28.00	28/1	4000	8000	1.2	3.0	1.0	80	11
214	89	115	2.1	2.3	PH532_0280 EZ501U	360	390	700	28.00	28/1	4000	8000	3.2	3.0	1.0	80	12
214	91	128	2.1	2.2	PH532_0280 EZ402U	360	390	700	28.00	28/1	4000	8000	1.9	3.0	1.0	80	12
214	135	203	3.2	1.5	PH532_0280 EZ502U	360	390	700	28.00	28/1	4000	8000	5.5	3.0	1.0	80	13
214	151	219	3.5	1.3	PH532_0280 EZ404U	360	390	700	28.00	28/1	4000	8000	3.3	3.0	1.0	80	14
240	53	65	1.4	3.9	PH532_0250 EZ401U	200	200	710	25.00	25/1	3700	7500	1.1	3.0	1.0	85	11
240	79	102	2.1	2.7	PH532_0250 EZ501U	370	370	710	25.00	25/1	3700	7500	3.1	3.0	1.0	85	12
240	81	114	2.2	2.6	PH532_0250 EZ402U	370	370	710	25.00	25/1	3700	7500	1.8	3.0	1.0	85	12
240	121	181	3.2	1.7	PH532_0250 EZ502U	390	400	710	25.00	25/1	3700	7500	5.4	3.0	1.0	85	13
240	135	195	3.6	1.6	PH532_0250 EZ404U	390	400	710	25.00	25/1	3700	7500	3.2	3.0	1.0	85	14
240	144	246	3.8	1.5	PH532_0250 EZ503U	390	400	710	25.00	25/1	3700	7500	7.8	3.0	1.0	85	15
300	43	52	1.6	4.9	PH532_0200 EZ401U	160	160	710	20.00	20/1	3500	7000	1.2	3.0	1.0	86	11
300	63	82	2.4	3.3	PH532_0200 EZ501U	300	300	710	20.00	20/1	3500	7000	3.1	3.0	1.0	86	12
300	65	91	2.4	3.2	PH532_0200 EZ402U	300	300	710	20.00	20/1	3500	7000	1.9	3.0	1.0	86	12
300	97	145	3.6	2.2	PH532_0200 EZ502U	370	390	710	20.00	20/1	3500	7000	5.4	3.0	1.0	86	13
300	108	156	4.0	1.9	PH532_0200 EZ404U	370	390	710	20.00	20/1	3500	7000	3.2	3.0	1.0	86	14
300	115	197	4.3	1.8	PH532_0200 EZ503U	370	390	710	20.00	20/1	3500	7000	7.8	3.0	1.0	86	15
375	51	65	2.8	3.9	PH532_0160 EZ501U	240	240	700	16.00	16/1	3500	7000	3.3	3.0	1.0	83	12
375	52	73	2.9	3.8	PH532_0160 EZ402U	240	240	700	16.00	16/1	3500	7000	2.0	3.0	1.0	83	12

n_{2N} [rpm]	M_{2N} [Nm]	$M_{2,0}$ [Nm]	a_{th}	S	Type	M_{2acc} [Nm]	M_{2accHT} [Nm]	M_{2NOT} [Nm]	i	i_{exakt}	n_{1maxDB} [rpm]	n_{1maxZB} [rpm]	J_1 [kgcm²]	$\Delta\varphi_2$ [arcmin]	$\Delta\varphi_{2red}$ [arcmin]	C_2 [Nm/ arcmin]	m [kg]
PH5 (n_{1N} = 6000 rpm, $M_{2acc,max}$ = 390 Nm)																	
375	77	116	4.3	2.5	PH532_0160 EZ502U	360	360	700	16.00	16/1	3500	7000	5.6	3.0	1.0	83	13
375	86	125	4.8	2.3	PH532_0160 EZ404U	360	360	700	16.00	16/1	3500	7000	3.3	3.0	1.0	83	14
375	92	158	5.2	2.1	PH532_0160 EZ503U	360	360	700	16.00	16/1	3500	7000	7.9	3.0	1.0	83	15
600	33	42	1.7	3.5	PH531_0100 EZ501U	150	150	580	10.00	10/1	3300	6500	3.2	3.0	1.0	53	9.9
600	50	75	2.6	2.3	PH531_0100 EZ502U	290	290	580	10.00	10/1	3300	6500	5.5	3.0	1.0	53	11
600	50	76	2.6	2.3	PH531_0100 EZ701U	190	190	580	10.00	10/1	3300	6500	8.8	3.0	1.0	53	13
600	60	102	3.1	1.9	PH531_0100 EZ503U	290	290	580	10.00	10/1	3300	6500	7.8	3.0	1.0	53	13
600	69	137	3.7	1.6	PH531_0100 EZ702U	290	290	580	10.00	10/1	3300	6500	14	3.0	1.0	53	16
857	35	52	3.2	4.2	PH531_0070 EZ502U	210	210	710	7.000	7/1	3000	6000	5.8	3.0	1.0	77	11
857	35	53	3.2	4.2	PH531_0070 EZ701U	130	130	710	7.000	7/1	3000	6000	9.1	3.0	1.0	77	13
857	42	71	3.8	3.5	PH531_0070 EZ503U	290	290	710	7.000	7/1	3000	6000	8.1	3.0	1.0	77	13
857	48	96	4.4	3.0	PH531_0070 EZ702U	280	280	710	7.000	7/1	3000	6000	14	3.0	1.0	77	16
PH7 (n_{1N} = 2000 rpm, $M_{2acc,max}$ = 880 Nm)																	
286	294	444	11	1.5	PH731_0070 EZ805U	870	870	1720	7.000	7/1	2500	5000	134	3.0	1.0	166	55
400	210	317	16	2.1	PH731_0050 EZ805U	880	920	1720	5.000	5/1	2200	5000	136	3.0	1.0	208	55
500	168	254	21	2.6	PH731_0040 EZ805U	790	790	1680	4.000	4/1	1900	4000	138	3.0	1.0	243	55
PH7 (n_{1N} = 3000 rpm, $M_{2acc,max}$ = 870 Nm)																	
43	280	306	0.7	2.0	PH732_0700 EZ501U	810	850	1620	70.00	70/1	3700	7000	3.3	3.0	1.0	154	18
43	482	521	1.2	1.2	PH732_0700 EZ502U	810	850	1620	70.00	70/1	3700	7000	5.6	3.0	1.0	154	20
43	482	540	1.2	1.2	PH732_0700 EZ701U	810	850	1620	70.00	70/1	3700	7000	8.9	3.0	1.0	154	21
60	200	219	0.9	2.8	PH732_0500 EZ501U	740	740	1660	50.00	50/1	3700	7000	3.6	3.0	1.0	176	18
60	344	372	1.5	1.6	PH732_0500 EZ502U	830	830	1660	50.00	50/1	3700	7000	5.9	3.0	1.0	176	20
60	344	386	1.5	1.6	PH732_0500 EZ701U	830	830	1660	50.00	50/1	3700	7000	9.2	3.0	1.0	176	21
60	451	516	1.9	1.2	PH732_0500 EZ503U	830	830	1660	50.00	50/1	3700	7000	8.3	3.0	1.0	176	21
75	160	175	1.1	3.0	PH732_0400 EZ501U	600	600	1540	40.00	40/1	3700	7000	3.9	3.0	1.0	182	18
75	275	298	1.9	1.7	PH732_0400 EZ502U	770	770	1540	40.00	40/1	3700	7000	6.2	3.0	1.0	182	20
75	275	309	1.9	1.7	PH732_0400 EZ701U	740	740	1540	40.00	40/1	3700	7000	9.5	3.0	1.0	182	21
75	361	413	2.5	1.3	PH732_0400 EZ503U	770	770	1540	40.00	40/1	3700	7000	8.6	3.0	1.0	182	21
75	446	536	3.1	1.1	PH732_0400 EZ702U	770	770	1540	40.00	40/1	3700	7000	15	3.0	1.0	182	24
86	140	153	1.1	3.9	PH732_0350 EZ501U	520	520	1720	35.00	35/1	3700	7000	3.6	3.0	1.0	183	18
86	241	260	1.8	2.2	PH732_0350 EZ502U	870	910	1720	35.00	35/1	3700	7000	5.9	3.0	1.0	183	20
86	241	270	1.8	2.2	PH732_0350 EZ701U	650	650	1720	35.00	35/1	3700	7000	9.2	3.0	1.0	183	21
86	316	361	2.4	1.7	PH732_0350 EZ503U	870	910	1720	35.00	35/1	3700	7000	8.3	3.0	1.0	183	21
86	391	469	2.9	1.4	PH732_0350 EZ702U	870	910	1720	35.00	35/1	3700	7000	14	3.0	1.0	183	24
86	439	521	3.3	1.2	PH732_0350 EZ505U	870	910	1720	35.00	35/1	3700	7000	13	3.0	1.0	183	24
107	112	122	1.2	4.8	PH732_0280 EZ501U	420	420	1540	28.00	28/1	3700	7000	4.0	3.0	1.0	194	18
107	193	208	2.0	2.8	PH732_0280 EZ502U	770	810	1540	28.00	28/1	3700	7000	6.3	3.0	1.0	194	20
107	193	216	2.0	2.8	PH732_0280 EZ701U	520	520	1540	28.00	28/1	3700	7000	9.6	3.0	1.0	194	21
107	253	289	2.7	2.1	PH732_0280 EZ503U	770	880	1540	28.00	28/1	3700	7000	8.6	3.0	1.0	194	21
107	312	375	3.3	1.7	PH732_0280 EZ702U	770	880	1540	28.00	28/1	3700	7000	15	3.0	1.0	194	24
107	352	417	3.7	1.5	PH732_0280 EZ505U	770	880	1540	28.00	28/1	3700	7000	13	3.0	1.0	194	24
107	430	542	4.5	1.3	PH732_0280 EZ703U	770	880	1540	28.00	28/1	3700	7000	23	3.0	1.0	194	26
120	172	186	2.3	2.9	PH732_0250 EZ502U	720	720	1720	25.00	25/1	3500	7000	6.0	3.0	1.0	186	20
120	172	193	2.3	2.9	PH732_0250 EZ701U	470	470	1720	25.00	25/1	3500	7000	9.3	3.0	1.0	186	21
120	226	258	3.0	2.2	PH732_0250 EZ503U	870	910	1720	25.00	25/1	3500	7000	8.3	3.0	1.0	186	21
120	279	335	3.8	1.8	PH732_0250 EZ702U	870	910	1720	25.00	25/1	3500	7000	14	3.0	1.0	186	24
120	314	372	4.2	1.6	PH732_0250 EZ505U	870	910	1720	25.00	25/1	3500	7000	13	3.0	1.0	186	24
120	384	484	5.2	1.3	PH732_0250 EZ703U	870	910	1720	25.00	25/1	3500	7000	22	3.0	1.0	186	26
150	138	149	2.8	3.3	PH732_0200 EZ502U	580	580	1610	20.00	20/1	3000	6000	6.1	3.0	1.0	188	20
150	138	154	2.8	3.3	PH732_0200 EZ701U	370	370	1610	20.00	20/1	3000	6000	9.4	3.0	1.0	188	21
150	180	206	3.7	2.6	PH732_0200 EZ503U	800	800	1610	20.00	20/1	3000	6000	8.4	3.0	1.0	188	21
150	223	268	4.6	2.1	PH732_0200 EZ702U	760	760	1610	20.00	20/1	3000	6000	15	3.0	1.0	188	24
150	251	298	5.1	1.8	PH732_0200 EZ505U	810	840	1610	20.00	20/1	3000	6000	13	3.0	1.0	188	24
150	307	387	6.3	1.5	PH732_0200 EZ703U	810	840	1610	20.00	20/1	3000	6000	22	3.0	1.0	188	26
150	396	562	8.1	1.2	PH732_0200 EZ705U	810	840	1610	20.00	20/1	3000	6000	35	3.0	1.0	188	31
188	110	119	3.2	4.1	PH732_0160 EZ502U	460	460	1480	16.00	16/1	3000	6000	6.5	3.0	1.0	202	20
188	110	124	3.2	4.1	PH732_0160 EZ701U	300	300	1480	16.00	16/1	3000	6000	9.8	3.0	1.0	202	21
188	144	165	4.2	3.1	PH732_0160 EZ503U	640	640	1480	16.00	16/1	3000	6000	8.9	3.0	1.0	202	21
188	179	214	5.2	2.5	PH732_0160 EZ702U	610	610	1480	16.00	16/1	3000	6000	15	3.0	1.0	202	24
188	201	238	5.9	2.2	PH732_0160 EZ505U	740	740	1480	16.00	16/1	3000	6000	13	3.0	1.0	202	24
188	246	310	7.2	1.8	PH732_0160 EZ703U	740	740	1480	16.00	16/1	3000	6000	23	3.0	1.0	202	26
188	317	449	9.2	1.4	PH732_0160 EZ705U	740	740	1480	16.00	16/1	3000	6000	35	3.0	1.0	202	31
300	71	80	1.8	3.9	PH731_0100 EZ701U	190	190	1150	10.00	10/1	2500	5000	9.3	3.0	1.0	125	18
300	115	138	3.0	2.4	PH731_0100 EZ702U	390	390	1150	10.00	10/1	2500	5000	15	3.0	1.0	125	20
300	158	200	4.1	1.8	PH731_0100 EZ703U	580	580	1150	10.00	10/1	2500	5000	22	3.0	1.0	125	22

n_{2N} [rpm]	M_{2N} [Nm]	$M_{2,0}$ [Nm]	a_{th}	S	Type	M_{2acc} [Nm]	M_{2accHT} [Nm]	M_{2NOT} [Nm]	i	i_{exakt}	n_{1maxDB} [rpm]	n_{1maxZB} [rpm]	J_1 [kgcm²]	$\Delta\varphi_2$ [arcmin]	$\Delta\varphi_{2red}$ [arcmin]	C_2 [Nm/ arcmin]	m [kg]
PH7 (n_{1N} = 3000 rpm, $M_{2acc,max}$ = 870 Nm)																	
300	204	290	5.3	1.4	PH731_0100 EZ705U	580	580	1150	10.00	10/1	2500	5000	35	3.0	1.0	125	28
300	214	356	5.5	1.3	PH731_0100 EZ802U	580	580	1150	10.00	10/1	2500	5000	59	3.0	1.0	125	36
429	81	97	3.3	4.8	PH731_0070 EZ702U	280	280	1550	7.000	7/1	2500	5000	15	3.0	1.0	166	20
429	111	140	4.5	3.5	PH731_0070 EZ703U	440	440	1550	7.000	7/1	2500	5000	23	3.0	1.0	166	22
429	143	203	5.9	2.7	PH731_0070 EZ705U	700	700	1550	7.000	7/1	2500	5000	36	3.0	1.0	166	28
429	150	249	6.1	2.6	PH731_0070 EZ802U	670	670	1720	7.000	7/1	2500	5000	60	3.0	1.0	166	36
429	179	324	7.3	2.2	PH731_0070 EZ803U	870	870	1720	7.000	7/1	2500	5000	85	3.0	1.0	166	42
600	79	100	6.8	4.9	PH731_0050 EZ703U	310	310	1110	5.000	5/1	2200	5000	25	3.0	1.0	208	22
600	102	145	8.8	3.8	PH731_0050 EZ705U	500	500	1110	5.000	5/1	2200	5000	37	3.0	1.0	208	28
600	107	178	9.2	3.6	PH731_0050 EZ802U	480	480	1720	5.000	5/1	2200	5000	61	3.0	1.0	208	36
600	128	231	11	3.0	PH731_0050 EZ803U	700	700	1720	5.000	5/1	2200	5000	87	3.0	1.0	208	42
750	82	116	11	4.7	PH731_0040 EZ705U	400	400	890	4.000	4/1	1900	4000	39	3.0	1.0	243	28
750	86	142	12	4.5	PH731_0040 EZ802U	380	380	1680	4.000	4/1	1900	4000	63	3.0	1.0	243	36
750	102	185	14	3.8	PH731_0040 EZ803U	560	560	1680	4.000	4/1	1900	4000	89	3.0	1.0	243	42
PH7 (n_{1N} = 4500 rpm, $M_{2acc,max}$ = 870 Nm)																	
113	353	569	2.8	1.2	PH732_0400 EZ505U	770	770	1540	40.00	40/1	3700	7000	13	3.0	1.0	182	24
129	309	498	2.6	1.6	PH732_0350 EZ505U	870	910	1720	35.00	35/1	3700	7000	13	3.0	1.0	183	24
129	394	651	3.3	1.2	PH732_0350 EZ703U	870	910	1720	35.00	35/1	3700	7000	22	3.0	1.0	183	26
161	247	398	2.9	2.0	PH732_0280 EZ505U	770	880	1540	28.00	28/1	3700	7000	13	3.0	1.0	194	24
161	315	521	3.7	1.5	PH732_0280 EZ703U	770	880	1540	28.00	28/1	3700	7000	23	3.0	1.0	194	26
180	221	356	3.2	2.1	PH732_0250 EZ505U	870	910	1720	25.00	25/1	3500	7000	13	3.0	1.0	186	24
180	281	465	4.1	1.6	PH732_0250 EZ703U	870	910	1720	25.00	25/1	3500	7000	22	3.0	1.0	186	26
225	177	285	3.7	2.6	PH732_0200 EZ505U	810	840	1610	20.00	20/1	3000	6000	13	3.0	1.0	188	24
225	225	372	4.7	2.0	PH732_0200 EZ703U	810	840	1610	20.00	20/1	3000	6000	22	3.0	1.0	188	26
225	305	558	6.4	1.5	PH732_0200 EZ705U	810	840	1610	20.00	20/1	3000	6000	35	3.0	1.0	188	31
281	141	228	4.1	3.2	PH732_0160 EZ505U	740	740	1480	16.00	16/1	3000	6000	13	3.0	1.0	202	24
281	180	298	5.3	2.5	PH732_0160 EZ703U	740	740	1480	16.00	16/1	3000	6000	23	3.0	1.0	202	26
281	244	446	7.1	1.8	PH732_0160 EZ705U	740	740	1480	16.00	16/1	3000	6000	35	3.0	1.0	202	31
450	101	331	3.0	2.4	PH731_0100 EZ802U	580	580	1150	10.00	10/1	2500	5000	59	3.0	1.0	125	36
450	116	192	3.4	2.1	PH731_0100 EZ703U	580	580	1150	10.00	10/1	2500	5000	22	3.0	1.0	125	22
450	157	288	4.7	1.5	PH731_0100 EZ705U	580	580	1150	10.00	10/1	2500	5000	35	3.0	1.0	125	28
643	71	232	3.3	4.8	PH731_0070 EZ802U	670	670	1720	7.000	7/1	2500	5000	60	3.0	1.0	166	36
643	81	134	3.8	4.1	PH731_0070 EZ703U	440	440	1550	7.000	7/1	2500	5000	23	3.0	1.0	166	22
643	110	202	5.2	3.0	PH731_0070 EZ705U	700	700	1550	7.000	7/1	2500	5000	36	3.0	1.0	166	28
900	79	144	7.7	4.3	PH731_0050 EZ705U	500	500	1110	5.000	5/1	2200	5000	37	3.0	1.0	208	28
PH7 (n_{1N} = 6000 rpm, $M_{2acc,max}$ = 870 Nm)																	
86	221	286	0.7	2.0	PH732_0700 EZ501U	810	850	1620	70.00	70/1	3700	7000	3.3	3.0	1.0	154	18
86	339	508	1.1	1.3	PH732_0700 EZ502U	810	850	1620	70.00	70/1	3700	7000	5.6	3.0	1.0	154	20
86	339	514	1.1	1.3	PH732_0700 EZ701U	810	850	1620	70.00	70/1	3700	7000	8.9	3.0	1.0	154	21
120	158	205	0.9	2.8	PH732_0500 EZ501U	740	740	1660	50.00	50/1	3700	7000	3.6	3.0	1.0	176	18
120	242	363	1.3	1.8	PH732_0500 EZ502U	830	830	1660	50.00	50/1	3700	7000	5.9	3.0	1.0	176	20
120	242	367	1.3	1.8	PH732_0500 EZ701U	830	830	1660	50.00	50/1	3700	7000	9.2	3.0	1.0	176	21
120	288	493	1.6	1.5	PH732_0500 EZ503U	830	830	1660	50.00	50/1	3700	7000	8.3	3.0	1.0	176	21
150	126	164	1.1	3.0	PH732_0400 EZ501U	600	600	1540	40.00	40/1	3700	7000	3.9	3.0	1.0	182	18
150	193	290	1.7	1.9	PH732_0400 EZ502U	770	770	1540	40.00	40/1	3700	7000	6.2	3.0	1.0	182	20
150	193	294	1.7	1.9	PH732_0400 EZ701U	740	740	1540	40.00	40/1	3700	7000	9.5	3.0	1.0	182	21
150	231	394	2.0	1.6	PH732_0400 EZ503U	770	770	1540	40.00	40/1	3700	7000	8.6	3.0	1.0	182	21
150	268	532	2.4	1.4	PH732_0400 EZ702U	770	770	1540	40.00	40/1	3700	7000	15	3.0	1.0	182	24
171	111	143	1.0	4.0	PH732_0350 EZ501U	520	520	1720	35.00	35/1	3700	7000	3.6	3.0	1.0	183	18
171	169	254	1.6	2.6	PH732_0350 EZ502U	870	910	1720	35.00	35/1	3700	7000	5.9	3.0	1.0	183	20
171	169	257	1.6	2.6	PH732_0350 EZ701U	650	650	1720	35.00	35/1	3700	7000	9.2	3.0	1.0	183	21
171	202	345	1.9	2.2	PH732_0350 EZ503U	870	910	1720	35.00	35/1	3700	7000	8.3	3.0	1.0	183	21
171	234	465	2.2	1.9	PH732_0350 EZ702U	870	910	1720	35.00	35/1	3700	7000	14	3.0	1.0	183	24
214	89	115	1.1	5.0	PH732_0280 EZ501U	420	420	1540	28.00	28/1	3700	7000	4.0	3.0	1.0	194	18
214	135	203	1.7	3.2	PH732_0280 EZ502U	770	810	1540	28.00	28/1	3700	7000	6.3	3.0	1.0	194	20
214	135	206	1.7	3.2	PH732_0280 EZ701U	520	520	1540	28.00	28/1	3700	7000	9.6	3.0	1.0	194	21
214	161	276	2.1	2.7	PH732_0280 EZ503U	770	880	1540	28.00	28/1	3700	7000	8.6	3.0	1.0	194	21
214	187	372	2.4	2.3	PH732_0280 EZ702U	770	880	1540	28.00	28/1	3700	7000	15	3.0	1.0	194	24
240	121	181	2.0	3.4	PH732_0250 EZ502U	720	720	1720	25.00	25/1	3500	7000	6.0	3.0	1.0	186	20
240	121	184	2.0	3.4	PH732_0250 EZ701U	470	470	1720	25.00	25/1	3500	7000	9.3	3.0	1.0	186	21
240	144	246	2.3	2.9	PH732_0250 EZ503U	870	910	1720	25.00	25/1	3500	7000	8.3	3.0	1.0	186	21
240	167	332	2.7	2.5	PH732_0250 EZ702U	870	910	1720	25.00	25/1	3500	7000	14	3.0	1.0	186	24
300	97	145	2.2	4.2	PH732_0200 EZ502U	580	580	1610	20.00	20/1	3000	6000	6.1	3.0	1.0	188	20
300	97	147	2.2	4.2	PH732_0200 EZ701U	370	370	1610	20.00	20/1	3000	6000	9.4	3.0	1.0	188	21
300	115	197	2.6	3.6	PH732_0200 EZ503U	800	800	1610	20.00	20/1	3000	6000	8.4	3.0	1.0	188	21

n_{2N} [rpm]	M_{2N} [Nm]	$M_{2,0}$ [Nm]	a_{th}	S	Type	M_{2acc} [Nm]	M_{2accHT} [Nm]	M_{2NOT} [Nm]	i	i_{exakt}	n_{1maxDB} [rpm]	n_{1maxZB} [rpm]	J_1 [kgcm²]	$\Delta\varphi_2$ [arcmin]	$\Delta\varphi_{2red}$ [arcmin]	C_2 [Nm/ arcmin]	m [kg]
PH7 (n_{1N} = 6000 rpm, $M_{2acc,max}$ = 870 Nm)																	
300	134	266	3.1	3.1	PH732_0200 EZ702U	760	760	1610	20.00	20/1	3000	6000	15	3.0	1.0	188	24
375	92	158	3.0	4.4	PH732_0160 EZ503U	640	640	1480	16.00	16/1	3000	6000	8.9	3.0	1.0	202	21
375	107	213	3.4	3.8	PH732_0160 EZ702U	610	610	1480	16.00	16/1	3000	6000	15	3.0	1.0	202	24
PH8 (n_{1N} = 2000 rpm, $M_{2acc,max}$ = 2100 Nm)																	
80	1016	1537	5.7	1.3	PH832_0250 EZ805U	2100	2300	4200	25.00	25/1	2700	5500	135	3.0	1.0	521	79
100	813	1229	6.6	1.5	PH832_0200 EZ805U	2100	2300	4200	20.00	20/1	2500	4500	136	3.0	1.0	526	79
125	650	984	8.4	1.7	PH832_0160 EZ805U	2000	2200	4000	16.00	16/1	2500	4500	138	3.0	1.0	501	79
200	420	635	4.2	1.8	PH831_0100 EZ805U	1390	1390	2780	10.00	10/1	2200	4000	137	3.0	1.0	344	72
286	294	444	5.0	3.4	PH831_0070 EZ805U	1380	1380	3440	7.000	7/1	2000	4000	142	3.0	1.0	463	72
400	210	317	7.5	4.8	PH831_0050 EZ805U	980	980	2490	5.000	5/1	1600	4000	149	3.0	1.0	604	72
500	168	254	12	4.8	PH831_0040 EZ805U	790	790	2000	4.000	4/1	1400	3500	160	3.0	1.0	620	72
PH8 (n_{1N} = 3000 rpm, $M_{2acc,max}$ = 2100 Nm)																	
30	688	772	0.7	1.3	PH832_1000 EZ701U	1380	1380	2760	100.0	100/1	3000	6000	9.1	3.0	1.0	333	41
43	482	540	0.6	2.6	PH832_0700 EZ701U	1300	1300	3700	70.00	70/1	3000	6000	9.6	3.0	1.0	425	41
43	781	937	1.0	1.6	PH832_0700 EZ702U	1850	1940	3700	70.00	70/1	3000	6000	15	3.0	1.0	425	44
43	1074	1354	1.3	1.2	PH832_0700 EZ703U	1850	1940	3700	70.00	70/1	3000	6000	23	3.0	1.0	425	46
60	344	386	0.7	3.7	PH832_0500 EZ701U	930	930	4200	50.00	50/1	3000	6000	11	3.0	1.0	491	41
60	558	670	1.1	2.3	PH832_0500 EZ702U	1910	1910	4200	50.00	50/1	3000	6000	16	3.0	1.0	491	44
60	767	967	1.6	1.7	PH832_0500 EZ703U	2100	2300	4200	50.00	50/1	3000	6000	24	3.0	1.0	491	46
60	990	1404	2.0	1.3	PH832_0500 EZ705U	2100	2300	4200	50.00	50/1	3000	6000	36	3.0	1.0	491	51
75	275	309	1.0	3.7	PH832_0400 EZ701U	740	740	3840	40.00	40/1	3000	6000	12	3.0	1.0	453	41
75	446	536	1.6	2.3	PH832_0400 EZ702U	1530	1530	3840	40.00	40/1	3000	6000	17	3.0	1.0	453	44
75	614	774	2.2	1.7	PH832_0400 EZ703U	1920	1940	3840	40.00	40/1	3000	6000	25	3.0	1.0	453	46
75	792	1123	2.8	1.3	PH832_0400 EZ705U	1920	1940	3840	40.00	40/1	3000	6000	38	3.0	1.0	453	51
75	830	1380	2.9	1.2	PH832_0400 EZ802U	1920	1940	3840	40.00	40/1	3000	6000	62	3.0	1.0	453	60
86	391	469	1.4	3.2	PH832_0350 EZ702U	1330	1330	4200	35.00	35/1	3000	6000	16	3.0	1.0	511	44
86	537	677	1.9	2.3	PH832_0350 EZ703U	2100	2120	4200	35.00	35/1	3000	6000	24	3.0	1.0	511	46
86	693	983	2.4	1.8	PH832_0350 EZ705U	2100	2300	4200	35.00	35/1	3000	6000	36	3.0	1.0	511	51
86	726	1208	2.5	1.7	PH832_0350 EZ802U	2100	2300	4200	35.00	35/1	3000	6000	60	3.0	1.0	511	60
86	866	1569	3.0	1.5	PH832_0350 EZ803U	2100	2300	4200	35.00	35/1	3000	6000	86	3.0	1.0	511	66
107	312	375	1.9	3.2	PH832_0280 EZ702U	1070	1070	4000	28.00	28/1	3000	6000	18	3.0	1.0	480	44
107	430	542	2.6	2.3	PH832_0280 EZ703U	1690	1690	4000	28.00	28/1	3000	6000	25	3.0	1.0	480	46
107	555	786	3.4	1.8	PH832_0280 EZ705U	2000	2000	4000	28.00	28/1	3000	6000	38	3.0	1.0	480	51
107	581	966	3.5	1.7	PH832_0280 EZ802U	2000	2000	4000	28.00	28/1	3000	6000	62	3.0	1.0	480	60
107	693	1255	4.2	1.5	PH832_0280 EZ803U	2000	2000	4000	28.00	28/1	3000	6000	87	3.0	1.0	480	66
120	279	335	1.6	4.5	PH832_0250 EZ702U	950	950	4200	25.00	25/1	2700	5500	16	3.0	1.0	521	44
120	384	484	2.2	3.3	PH832_0250 EZ703U	1510	1510	4200	25.00	25/1	2700	5500	24	3.0	1.0	521	46
120	495	702	2.9	2.5	PH832_0250 EZ705U	2100	2300	4200	25.00	25/1	2700	5500	37	3.0	1.0	521	51
120	518	863	3.0	2.4	PH832_0250 EZ802U	2100	2300	4200	25.00	25/1	2700	5500	61	3.0	1.0	521	60
120	618	1121	3.6	2.0	PH832_0250 EZ803U	2100	2300	4200	25.00	25/1	2700	5500	86	3.0	1.0	521	66
150	307	387	2.5	4.1	PH832_0200 EZ703U	1210	1210	4200	20.00	20/1	2500	4500	25	3.0	1.0	526	46
150	396	562	3.2	3.2	PH832_0200 EZ705U	1930	1930	4200	20.00	20/1	2500	4500	37	3.0	1.0	526	51
150	415	690	3.4	3.0	PH832_0200 EZ802U	1860	1860	4200	20.00	20/1	2500	4500	61	3.0	1.0	526	60
150	495	897	4.0	2.5	PH832_0200 EZ803U	2100	2300	4200	20.00	20/1	2500	4500	87	3.0	1.0	526	66
188	246	310	3.5	4.1	PH832_0160 EZ703U	970	970	3450	16.00	16/1	2500	4500	27	3.0	1.0	501	46
188	317	449	4.5	3.2	PH832_0160 EZ705U	1550	1550	3450	16.00	16/1	2500	4500	39	3.0	1.0	501	51
188	332	552	4.7	3.0	PH832_0160 EZ802U	1490	1490	4000	16.00	16/1	2500	4500	63	3.0	1.0	501	60
188	396	717	5.6	2.5	PH832_0160 EZ803U	2000	2160	4000	16.00	16/1	2500	4500	88	3.0	1.0	501	66
300	214	356	2.5	3.2	PH831_0100 EZ802U	960	960	2780	10.00	10/1	2200	4000	62	3.0	1.0	344	52
300	255	463	2.9	2.6	PH831_0100 EZ803U	1390	1390	2780	10.00	10/1	2200	4000	88	3.0	1.0	344	58
429	179	324	3.5	4.9	PH831_0070 EZ803U	970	970	3440	7.000	7/1	2000	4000	93	3.0	1.0	463	58
PH8 (n_{1N} = 4500 rpm, $M_{2acc,max}$ = 2100 Nm)																	
64	788	1302	1.1	1.4	PH832_0700 EZ703U	1850	1940	3700	70.00	70/1	3000	6000	23	3.0	1.0	425	46
90	488	1604	1.1	2.3	PH832_0500 EZ802U	2100	2300	4200	50.00	50/1	3000	6000	60	3.0	1.0	491	60
90	563	930	1.3	2.0	PH832_0500 EZ703U	2100	2300	4200	50.00	50/1	3000	6000	24	3.0	1.0	491	46
90	763	1395	1.8	1.5	PH832_0500 EZ705U	2100	2300	4200	50.00	50/1	3000	6000	36	3.0	1.0	491	51
113	391	1283	1.6	2.3	PH832_0400 EZ802U	1920	1940	3840	40.00	40/1	3000	6000	62	3.0	1.0	453	60
113	450	744	1.8	2.0	PH832_0400 EZ703U	1920	1940	3840	40.00	40/1	3000	6000	25	3.0	1.0	453	46
113	610	1116	2.5	1.5	PH832_0400 EZ705U	1920	1940	3840	40.00	40/1	3000	6000	38	3.0	1.0	453	51
129	342	1123	1.4	3.2	PH832_0350 EZ802U	2100	2300	4200	35.00	35/1	3000	6000	60	3.0	1.0	511	60
129	394	651	1.6	2.8	PH832_0350 EZ703U	2100	2120	4200	35.00	35/1	3000	6000	24	3.0	1.0	511	46
129	534	977	2.1	2.1	PH832_0350 EZ705U	2100	2300	4200	35.00	35/1	3000	6000	36	3.0	1.0	511	51
161	273	898	1.9	3.2	PH832_0280 EZ802U	2000	2000	4000	28.00	28/1	3000	6000	62	3.0	1.0	480	60
161	315	521	2.2	2.8	PH832_0280 EZ703U	1690	1690	4000	28.00	28/1	3000	6000	25	3.0	1.0	480	46
161	427	781	3.0	2.1	PH832_0280 EZ705U	2000	2000	4000	28.00	28/1	3000	6000	38	3.0	1.0	480	51

n_{2N} [rpm]	M_{2N} [Nm]	$M_{2,0}$ [Nm]	a_{th}	S	Type	M_{2acc} [Nm]	M_{2accHT} [Nm]	M_{2NOT} [Nm]	i	i_{exakt}	n_{1maxDB} [rpm]	n_{1maxZB} [rpm]	J_1 [kgcm²]	$\Delta\varphi_2$ [arcmin]	$\Delta\varphi_{2red}$ [arcmin]	C_2 [Nm/ arcmin]	m [kg]
PH8 (n_{1N} = 4500 rpm, $M_{2acc,max}$ = 2100 Nm)																	
180	244	802	1.6	4.5	PH832_0250 EZ802U	2100	2300	4200	25.00	25/1	2700	5500	61	3.0	1.0	521	60
180	281	465	1.9	3.9	PH832_0250 EZ703U	1510	1510	4200	25.00	25/1	2700	5500	24	3.0	1.0	521	46
180	381	698	2.5	2.9	PH832_0250 EZ705U	2100	2300	4200	25.00	25/1	2700	5500	37	3.0	1.0	521	51
225	225	372	2.1	4.9	PH832_0200 EZ703U	1210	1210	4200	20.00	20/1	2500	4500	25	3.0	1.0	526	46
225	305	558	2.8	3.6	PH832_0200 EZ705U	1930	1930	4200	20.00	20/1	2500	4500	37	3.0	1.0	526	51
281	180	298	2.9	4.9	PH832_0160 EZ703U	970	970	3450	16.00	16/1	2500	4500	27	3.0	1.0	501	46
281	244	446	3.9	3.6	PH832_0160 EZ705U	1550	1550	3450	16.00	16/1	2500	4500	39	3.0	1.0	501	51
PH8 (n_{1N} = 6000 rpm, $M_{2acc,max}$ = 1910 Nm)																	
60	484	735	0.6	1.4	PH832_1000 EZ701U	1380	1380	2760	100.0	100/1	3000	6000	9.1	3.0	1.0	333	41
86	339	514	0.5	3.0	PH832_0700 EZ701U	1300	1300	3700	70.00	70/1	3000	6000	9.6	3.0	1.0	425	41
86	469	931	0.7	2.1	PH832_0700 EZ702U	1850	1940	3700	70.00	70/1	3000	6000	15	3.0	1.0	425	44
120	242	367	0.6	4.2	PH832_0500 EZ701U	930	930	4200	50.00	50/1	3000	6000	11	3.0	1.0	491	41
120	335	665	0.9	3.0	PH832_0500 EZ702U	1910	1910	4200	50.00	50/1	3000	6000	16	3.0	1.0	491	44
150	193	294	0.9	4.2	PH832_0400 EZ701U	740	740	3840	40.00	40/1	3000	6000	12	3.0	1.0	453	41
150	268	532	1.2	3.0	PH832_0400 EZ702U	1530	1530	3840	40.00	40/1	3000	6000	17	3.0	1.0	453	44
171	234	465	1.0	4.3	PH832_0350 EZ702U	1330	1330	4200	35.00	35/1	3000	6000	16	3.0	1.0	511	44
214	187	372	1.4	4.3	PH832_0280 EZ702U	1070	1070	4000	28.00	28/1	3000	6000	18	3.0	1.0	480	44
PH9 (n_{1N} = 2000 rpm, $M_{2acc,max}$ = 5000 Nm)																	
42	1951	2951	1.9	1.5	PH932_0480 EZ805U	4500	–	9000	48.00	48/1	2800	4500	137	3.0	–	1084	109
48	1707	2582	2.0	1.8	PH932_0420 EZ805U	4500	–	9000	42.00	42/1	2800	4500	138	3.0	–	1099	109
50	1626	2459	2.3	1.7	PH932_0400 EZ805U	4610	–	9220	40.00	40/1	2800	4500	136	3.0	–	1057	109
63	1301	1967	2.3	2.3	PH932_0320 EZ805U	4610	–	9220	32.00	32/1	2800	4500	138	3.0	–	1112	109
67	1219	1844	2.4	2.5	PH932_0300 EZ805U	4500	–	9000	30.00	30/1	2500	4000	143	3.0	–	1115	109
71	1138	1721	2.5	2.6	PH932_0280 EZ805U	5000	–	10000	28.00	28/1	2800	4500	139	3.0	–	1147	109
83	975	1475	2.7	3.1	PH932_0240 EZ805U	4500	–	9000	24.00	24/1	2200	3500	149	3.0	–	1125	109
100	813	1229	3.0	3.7	PH932_0200 EZ805U	3810	–	10000	20.00	20/1	2500	4000	145	3.0	–	1188	109
111	732	1107	3.1	4.1	PH932_0180 EZ805U	3430	–	9000	18.00	18/1	1800	3000	177	3.0	–	1135	109
125	650	984	3.3	4.6	PH932_0160 EZ805U	3050	–	8960	16.00	16/1	2200	3500	153	3.0	–	1212	109
PH9 (n_{1N} = 3000 rpm, $M_{2acc,max}$ = 4610 Nm)																	
50	1244	2070	0.9	2.4	PH932_0600 EZ802U	4500	–	9000	60.00	60/1	2800	4500	60	3.0	–	1060	90
50	1484	2690	1.0	2.0	PH932_0600 EZ803U	4500	–	9000	60.00	60/1	2800	4500	86	3.0	–	1060	96
63	995	1656	1.0	3.0	PH932_0480 EZ802U	4460	–	9000	48.00	48/1	2800	4500	62	3.0	–	1084	90
63	1187	2152	1.2	2.5	PH932_0480 EZ803U	4500	–	9000	48.00	48/1	2800	4500	88	3.0	–	1084	96
71	871	1449	1.0	3.4	PH932_0420 EZ802U	3910	–	9000	42.00	42/1	2800	4500	63	3.0	–	1099	90
71	1039	1883	1.2	2.9	PH932_0420 EZ803U	4500	–	9000	42.00	42/1	2800	4500	89	3.0	–	1099	96
75	830	1380	1.4	2.8	PH932_0400 EZ802U	3720	–	9220	40.00	40/1	2800	4500	61	3.0	–	1057	90
75	990	1793	1.6	2.4	PH932_0400 EZ803U	4610	–	9220	40.00	40/1	2800	4500	86	3.0	–	1057	96
94	664	1104	1.3	4.0	PH932_0320 EZ802U	2980	–	9220	32.00	32/1	2800	4500	63	3.0	–	1112	90
94	792	1434	1.6	3.4	PH932_0320 EZ803U	4320	–	9220	32.00	32/1	2800	4500	88	3.0	–	1112	96
100	622	1035	1.2	4.8	PH932_0300 EZ802U	2790	–	9000	30.00	30/1	2500	4000	68	3.0	–	1115	90
100	742	1345	1.5	4.0	PH932_0300 EZ803U	4050	–	9000	30.00	30/1	2500	4000	94	3.0	–	1115	96
107	693	1255	1.5	4.3	PH932_0280 EZ803U	3780	–	10000	28.00	28/1	2800	4500	90	3.0	–	1147	96
PH10 (n_{1N} = 2000 rpm, $M_{2acc,max}$ = 7500 Nm)																	
33	2438	3688	1.4	1.7	PH1032_0600 EZ805U	6910	–	13820	60.00	60/1	2800	4500	135	3.0	–	1602	124
42	1951	2951	1.3	2.4	PH1032_0480 EZ805U	6910	–	13820	48.00	48/1	2800	4500	137	3.0	–	1657	124
48	1707	2582	1.3	2.9	PH1032_0420 EZ805U	7500	–	15000	42.00	42/1	2800	4500	138	3.0	–	1691	124
67	1219	1844	1.6	4.1	PH1032_0300 EZ805U	5720	–	15000	30.00	30/1	2500	4000	144	3.0	–	1730	124
83	975	1475	1.9	4.7	PH1032_0240 EZ805U	4580	–	13430	24.00	24/1	2200	3500	151	3.0	–	1753	124
PH10 (n_{1N} = 3000 rpm, $M_{2acc,max}$ = 6910 Nm)																	
50	1244	2070	0.8	2.8	PH1032_0600 EZ802U	5580	–	13820	60.00	60/1	2800	4500	61	3.0	–	1602	105
50	1484	2690	1.0	2.4	PH1032_0600 EZ803U	6910	–	13820	60.00	60/1	2800	4500	86	3.0	–	1602	111
63	995	1656	0.8	4.0	PH1032_0480 EZ802U	4460	–	13820	48.00	48/1	2800	4500	63	3.0	–	1657	105
63	1187	2152	0.9	3.4	PH1032_0480 EZ803U	6470	–	13820	48.00	48/1	2800	4500	88	3.0	–	1657	111
71	1039	1883	0.8	4.8	PH1032_0420 EZ803U	5660	–	15000	42.00	42/1	2800	4500	89	3.0	–	1691	111

3.3 Dimensional drawings

In this chapter you can find the dimensions of the geared motors.

There is a dimensional drawing for every possible shaft/housing design, each with the tables for gear unit dimensions, motor dimensions and geared motor dimensions.

Dimensions can exceed the specifications of ISO 2768-mK due to casting tolerances or accumulation of individual tolerances.

We reserve the right to make dimensional changes due to ongoing technical development.

You can download 3D models of our standard drives at http://configurator.stoeber.de.

Combination options and the dimensions of forced ventilated geared motors can also be found at http://configurator.stoeber.de.

3.3.1 F shaft design (flange shaft)

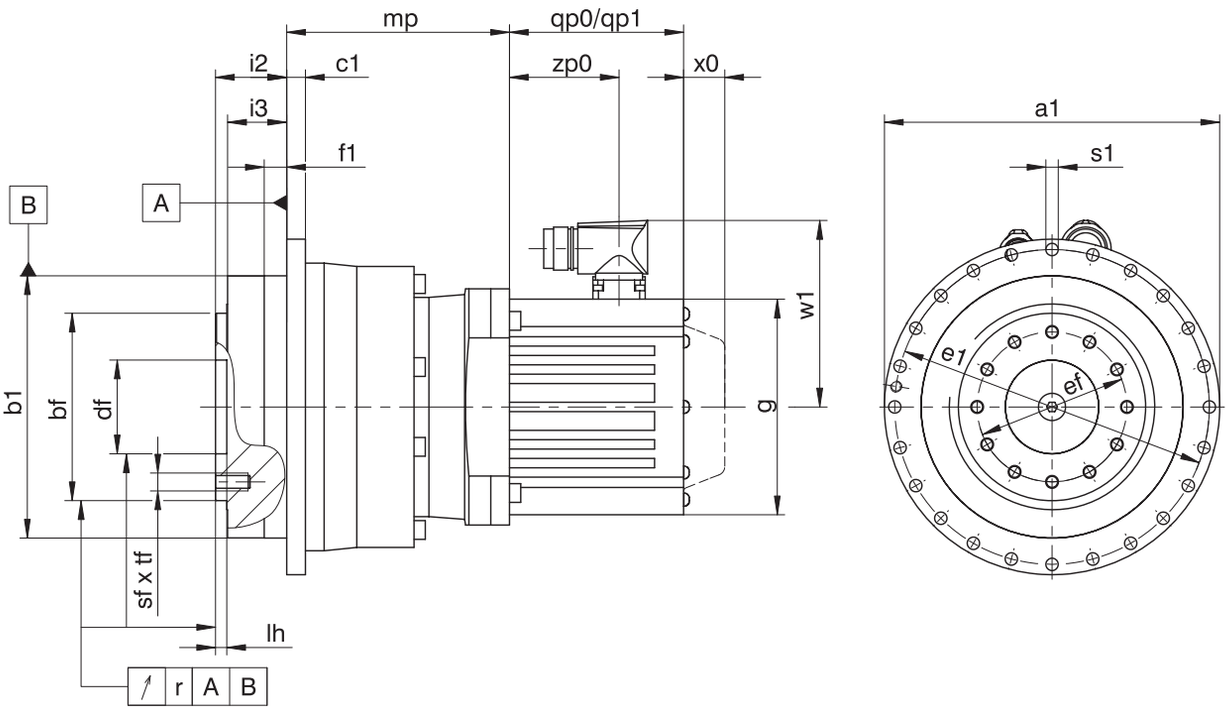

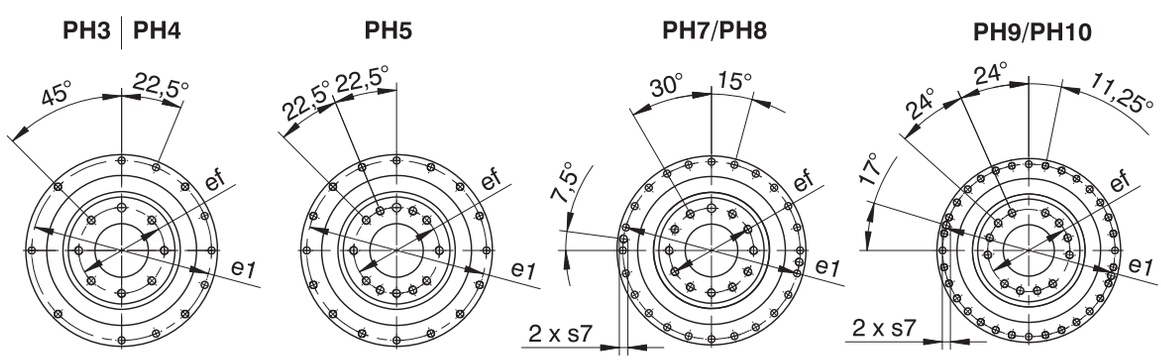

qp0	Applies to motors without brake.	qp1	Applies to motors with brake.
x0	Applies to encoders using an optical measuring method.	w1	Different for the One Cable Solution (OCS), see the chapter [▸ 17.4]

Dimensions of gear units

Type	Øa1	Øb1	Øbf	c1	Ødf	Øe1	Øef	f1	i2	i3	lh	r	Øs1	s7	sf	tf
PH331	86_{h7}	64_{h7}	40_{h7}	4	20.0^{H6}	79	31.5	7	19.5	16.5	4	0.020	4.5	–	M5	7
PH332	86_{h7}	64_{h7}	40_{h7}	4	20.0^{H6}	79	31.5	7	19.5	16.5	4	0.020	4.5	–	M5	7
PH431	118_{h7}	90_{h7}	63_{h7}	7	31.5^{H6}	109	50.0	10	30.0	24.0	6	0.020	5.5	–	M6	11
PH432	118_{h7}	90_{h7}	63_{h7}	7	31.5^{H6}	109	50.0	10	30.0	24.0	6	0.020	5.5	–	M6	11
PH531	145_{h7}	110_{h7}	80_{h7}	8	40.0^{H6}	135	63.0	12	29.0	23.0	6	0.020	5.5	–	M6	11
PH532	145_{h7}	110_{h7}	80_{h7}	8	40.0^{H6}	135	63.0	12	29.0	23.0	6	0.020	5.5	–	M6	11
PH731	179_{h7}	140_{h7}	100_{h7}	10	50.0^{H6}	168	80.0	12	38.0	32.0	6	0.025	6.6	–	M8	14
PH732	179_{h7}	140_{h7}	100_{h7}	10	50.0^{H6}	168	80.0	12	38.0	32.0	6	0.025	6.6	–	M8	14
PH831	247_{h7}	200_{h7}	160_{h7}	12	80.0^{H6}	233	125.0	15	50.0	42.0	8	0.030	9.0	M10	M10	18
PH832	247_{h7}	200_{h7}	160_{h7}	12	80.0^{H6}	233	125.0	15	50.0	42.0	8	0.030	9.0	M10	M10	18
PH932	300	255_{h7}	180_{h7}	18	90.0^{H6}	280	140.0	20	66.0	55.0	12	0.030	13.5	M8	M16	24
PH1032	330	285_{h7}	200_{h7}	20	95.0^{H6}	310	160.0	20	75.0	60.0	10	0.040	13.5	M10	M20	30

Dimensions of motors

Type	□g	qp0	qp1	w1	x0	zp0
EZ301U	72	90	130.0	55.5	21	54.5
EZ302U	72	112	152.0	55.5	21	76.5
EZ303U	72	134	174.0	55.5	21	98.5
EZ401U	98	98	146.5	91.0	22	56.0
EZ402U	98	123	171.5	91.0	22	81.0
EZ404U	98	173	221.5	91.0	22	131.0
EZ501U	115	93	147.5	100.0	22	58.5
EZ502U	115	118	172.5	100.0	22	83.5
EZ503U	115	143	197.5	100.0	22	108.5
EZ505U	115	193	247.5	100.0	22	158.5
EZ701U	145	102	161.0	115.0	22	64.0
EZ702U	145	127	186.0	115.0	22	89.0
EZ703U	145	152	211.0	115.0	22	114.0
EZ705U	145	207	266.0	134.0	22	165.0
EZ802U	190	197	274.0	156.5	22	143.0
EZ803U	190	238	315.0	156.5	22	184.0
EZ805U	190	320	397.0	156.5	22	266.0

Dimensions of geared motors

Type	EZ3	EZ4	EZ5	EZ7	EZ8
	mp	mp	mp	mp	mp
PH331	51.0	47.5	–	–	–
PH332	84.5	–	–	–	–
PH431	–	54.5	54.0	–	–
PH432	99.0	95.5	–	–	–
PH531	–	–	61.0	64.0	–
PH532	–	103.0	102.5	–	–
PH731	–	–	–	71.0	81.0
PH732	–	–	119.0	122.0	–
PH831	–	–	–	–	110.0
PH832	–	–	–	161.0	171.0
PH932	–	–	–	–	249.5
PH1032	–	–	–	–	257.0

3.4 Type designation

3.4.1 Type designation PH3 – PH8

In this chapter, you can find an explanation of the type designation for sizes PH3 – PH8 with the associated options.

Additional ordering information not included in the type designation can be found at the end of the chapter.

Example code

PH	**5**	**3**	**2**	**S**	**F**	**S**	**S**	**0250**	**EZ401U**

Explanation

Code	Designation	Design
PH	Type	Planetary gear unit
5	Size	5 (example)
3	Generation	Generation 3
1 **2**	Stages	Single-stage Two-stage
S	Housing	Standard
F	Shaft	Flange shaft
S V	Bearing	Standard bearing Reinforced bearing (PH3 – PH5)
S R	Backlash	Standard Reduced
0250	Transmission ratio (i x 10)	i = 25 (example)
EZ401U	Motor	EZ synchronous servo motor

To complete the type designation, also specify the following in your order:

- A detailed type designation of the motor, see the chapter [▶ 17]
- Radial shaft seal rings at the output made of NBR or FKM (option), see the chapter [▶ 3.6.3]
- Reverse operation of the output shaft from ±20° to ±90° and horizontal installation, note the chapter Reverse operation

3.4.2 Type designation PH9 – PH10

In this chapter, you can find an explanation of the type designation for sizes PH9 – PH10 with the associated options.

Additional ordering information not included in the type designation can be found at the end of the chapter.

Example code

PH	9	3	2	F	0420	EZ802U

Explanation

Code	Designation	Design
PH	Type	Planetary gear unit
9	Size	9 (example)
3	Generation	Generation 3
2	Stages	Two-stage
F	Shaft	Flange shaft
0420	Transmission ratio (i x 10)	i = 42 (example)
EZ802U	Motor	EZ synchronous servo motor

To complete the type designation, also specify the following in your order:

- A detailed type designation of the motor, see the chapter [▸ 17]
- Radial shaft seal rings at the output made of NBR or FKM (option), see the chapter [▸ 3.6.3]
- Reverse operation of the output shaft from ±20° to ±90° and horizontal installation, note the chapter Reverse operation

3.4.3 Nameplate

An example geared motor nameplate is explained in the figure below.

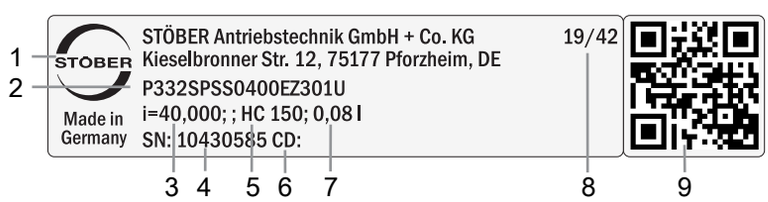

Code	Designation
1	Name of manufacturer
2	Type designation
3	Gear ratio of the gear unit
4	Serial number of the gear unit
5	Lubricant specification
6	Customer-specific data
7	Lubricant fill volume
8	Date of manufacture (year/calendar week)
9	QR code (link to product information)

3.4.3.1 Supporting documents

You can view or download supporting documents for the product by reading off the serial number on the nameplate of the product and entering it at the following address online:
https://id.stober.com

Alternatively, you can use a suitable mobile device to scan in the QR code on the nameplate of the product in order to be linked to the supporting documents.

3.5 Product description

3.5.1 Input options

EZ synchronous servo motor

http://www.stoeber.de/en/PHEZ

3.5.2 Installation conditions

The torque and force values listed in this catalog are valid under the following conditions:

- When the flange shaft and gear housing are fastened on the machine side using screws of strength class 12.9
- When the gear housings are adjusted at pilot øb1. The machine-side fit must be H7.
- When the flange shaft is adjusted using the connecting element at pilot øbf or ødf

3.5.3 Lubricants

STOBER fills the gear units with the amount and type of lubricant specified on the nameplate.

You will receive lubricants for use in the food industry upon request.

3.5.4 Other product features

Feature	Value
Max. permitted gear unit temperature (on the surface of the gear unit)	≤ 90 °C
Paint	Black RAL 9005
Explosion-proof design in accordance with (ATEX) Directive 2014/34/EU (optional)	Not available
Efficiency:	
η_{get} single-stage	96%
η_{get} two-stage	93%
Protection class:[1]	
Gear unit	IP65
Motor	IP56, optionally IP66

3.5.5 Direction of rotation

The input and output rotate in the same direction.

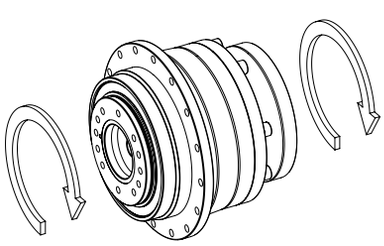

3.6 Project configuration

Project your drives using our SERVOsoft designing software. Download SERVOsoft for free at https://www.stoeber.de/en/ServoSoft.

[1] Observe the protection class of all the components.

Observe the limit conditions in this chapter to ensure a safe design for your drives.

An explanation of the formula symbols can be found in Chapter [▶ 23.1].

The formula symbols for values actually present in the application are marked with *.

3.6.1 Calculation of the operating point

Check the following conditions for operating points other than the nominal point M_{2N} specified in the selection tables.

$$n_{1m*} \leq \frac{n_{1maxDB}}{fB_T}$$

$$n_{1max*} \leq \frac{n_{1max\,ZB}}{fB_T}$$

$$M_{2eff*} \leq M_{2th}$$

$$M_{2acc*} \leq \frac{M_{2acc}}{fB_{ZB}}$$

$$M_{2NOT*} \leq M_{2NOT}$$

$$M_{2eq*} \leq M_{2N} \cdot \frac{S}{fB_{op} \cdot fB_t}$$

Refer to the selection tables for the values for n_{1maxDB}, n_{1maxZB}, M_{2acc} (M_{2accHT} for reduced backlash), M_{2NOT}, M_{2N} and S.

The values for fB_T, fB_{op}, fB_t and fB_{ZB} can be found in the corresponding tables in this chapter.

Calculate the thermal limit torque M_{2th} for a duty cycle > 50%.

Example of cyclic operation

The following calculations are based on a representation of the power taken from the output based in accordance with the following example:

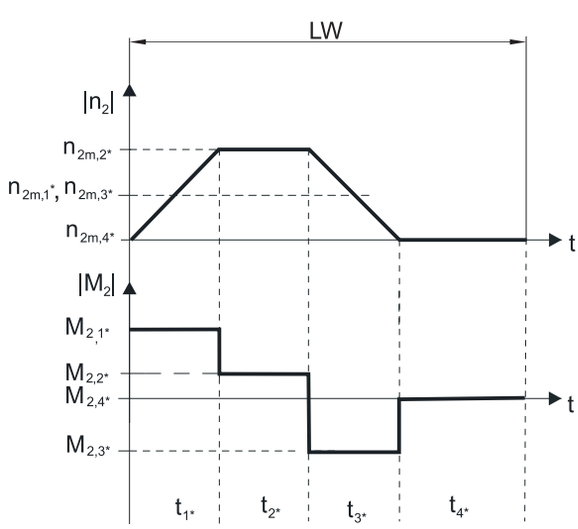

Calculation of the actual average input speed

$$n_{1m*} = n_{2m*} \cdot i$$

$$n_{2m*} = \frac{|n_{2m,1*}| \cdot t_{1*} + \ldots + |n_{2m,n*}| \cdot t_{n*}}{t_{1*} + \ldots + t_{n*}}$$

If $t_{1*} + \ldots + t_{3*} \geq 6$ min, calculate n_{2m*} without the rest phase t_{4*}.

The values for the ratio i can be found in the selection tables.

Calculation of the actual effective torque

$$M_{2eff*} = \sqrt{\frac{t_{1*} \cdot M_{2,1*}^{2} + \ldots + t_{n*} \cdot M_{2,n*}^{2}}{t_{1*} + \ldots + t_{n*}}}$$

Calculation of the actual equivalent torque

$$M_{2eq*} = \sqrt[3]{\frac{\left|n_{2m,1*}\right| \cdot t_{1*} \cdot \left|M_{2,1*}^{3}\right| + \ldots + \left|n_{2m,n*}\right| \cdot t_{n*} \cdot \left|M_{2,n*}^{3}\right|}{\left|n_{2m,1*}\right| \cdot t_{1*} + \ldots + \left|n_{2m,n*}\right| \cdot t_{n*}}}$$

Calculation of the thermal limit torque

Calculate the thermal limit torque M_{2th} for a duty cycle ED_{10} > 50% and the actual average input speed n_{1m*}. (At $K_{mot,th} \leq 0$ you must reduce the average input speed n_{1m*} accordingly or select another geared motor size.)

$$M_{2th} = M_{op} \cdot i \cdot K_{mot,th}$$

$$K_{mot,th} = 0{,}93 - \frac{a_{th}}{1000} \cdot fB_T \cdot \left(\frac{n_{1m*}}{1000}\right)^3$$

The values for i and a_{th} can be found in the selection tables.

The values for fB_T can be found in the corresponding table in this chapter.

The value for the torque of the motor at operating point M_{op} with the determined average input speed n_{1m*} can be found in the motor curve of Chapter [▶ 17.3]. Note the size, nominal speed n_N and cooling type of the motor. The figure below shows an example of reading the torque M_{op} of a motor with convection cooling at the operating point.

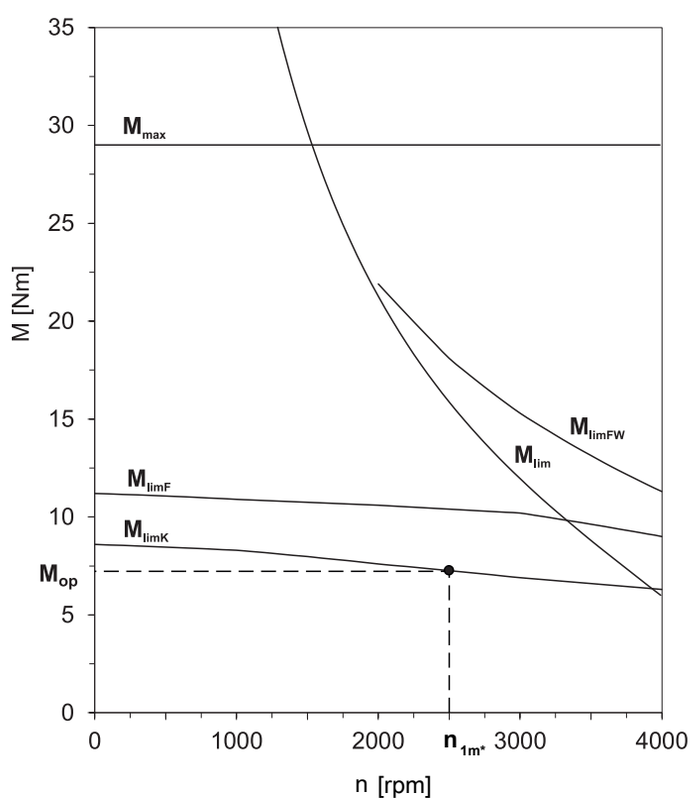

Operating factors

Operating mode	fB_{op}
Uniform continuous operation	1.00
Cyclic operation	1.00
Reversing load cyclic operation	1.00

Run time	fB_t
Daily runtime ≤ 8 h	1.00
Daily runtime ≤ 16 h	1.15
Daily runtime ≤ 24 h	1.20

Cyclic operation	fB_{ZB}
≤ 1000 load changes/hour (LW/h)	1.00
> 1000 load changes/hour (LW/h)	1.15

Temperature		fB_T
Motor cooling	**Surrounding temperature**	
Motor with forced ventilation	≤ 20 °C	0.9
	≤ 30 °C	1.0
	≤ 40 °C	1.15
Motor with convection cooling	≤ 20 °C	1.0
	≤ 30 °C	1.1
	≤ 40 °C	1.25

Notes

- The maximum permitted gear unit temperature (see the "Other product features" chapter) must not be exceeded. Doing so may result in damage to the geared motor.
- For braking from full speed (for example when the power fails or when setting up the machine), note the permitted gear unit torques (M_{2acc}, M_{2NOT}) in the selection tables.

3.6.2 Permitted shaft loads for the output shaft

The values specified in the tables apply to the permitted shaft loads:

- For shaft dimensions in accordance with the catalog
- For output speeds n_{2m*} ≤ 100 rpm ($F^{2axN} = F_{2ax100}$; $F_{2radN} = F_{2rad100}$; $M_{2kN} = M_{2k100}$)
- Only if radial forces on the gear unit are stabilized by its pilots (housing, flange shaft)

Permitted shaft loads for standard bearing S

Type	z_2 [mm]	F_{2ax100} [N]	$F_{2rad100}$ [N]	$F_{2rad,acc}$ [N]	M_{2k100} [Nm]	$M_{2k,acc}$ [Nm]	C_{2k} [Nm/arcmin]
PH3	62.5	1650	1613	1613	101	101	75
PH4	83.0	2150	3095	3571	257	296	192
PH5	97.0	4150	4536	4897	440	475	429
PH7	86.0	6150	17045	17045	1466	1466	500
PH8	125.5	10050	27778	27778	3486	3486	1550
PH9	155.0	33000	48387	70968	7500	11000	7500
PH10	171.0	50000	51462	73099	8800	12500	9500

Permitted shaft loads for reinforced bearing V

Type	z_2 [mm]	F_{2ax100} [N]	$F_{2rad100}$ [N]	$F_{2rad,acc}$ [N]	M_{2k100} [Nm]	$M_{2k,acc}$ [Nm]	C_{2k} [Nm/arcmin]
PH3	66.5	2200	2250	2250	150	150	80
PH4	88.5	2900	4000	4000	354	354	217
PH5	104.0	5000	5500	5500	572	572	478

For other output speeds, download diagrams at http://configurator.stoeber.de.

The following applies to output speeds n_{2m*} > 100 rpm:

$$F_{2axN} = \frac{F_{2ax100}}{\sqrt[3]{\frac{n_{2m*}}{100\ \text{rpm}}}} \qquad F_{2radN} = \frac{F_{2rad100}}{\sqrt[3]{\frac{n_{2m*}}{100\ \text{rpm}}}} \qquad M_{2kN} = \frac{M_{2k100}}{\sqrt[3]{\frac{n_{2m*}}{100\ \text{rpm}}}}$$

The values for F_{2ax100}, $F_{2rad100}$ and M_{2k100} can be found in the table "Permitted shaft loads" in this chapter.

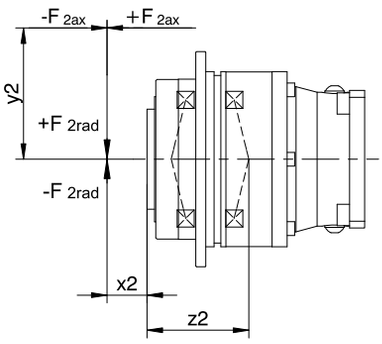

Fig. 1: Force application points

You can determine the permitted radial forces from the permitted breakdown torque M_{2kN} and $M_{2k,acc}$. The actual radial forces may not exceed the permitted radial forces. The permitted radial forces pertain to the shaft end (x2 = 0).

$$M_{2k,acc*} = \frac{2 \cdot F_{2ax*} \cdot y_2 + F_{2rad,acc*} \cdot (x_2 + z_2)}{1000} \leq M_{2k,acc}$$

For applications with multiple axial and/or radial forces, you must add the forces as vectors.

In the event of EMERGENCY OFF operation (max. 1000 load changes), you can multiply the permitted forces and torques for F_{2ax100}, $F_{2rad100}$ and M_{2k100} by a factor of two.

Also note the calculation for equivalent values:

$$M_{2k,eq*} = \sqrt[3]{\frac{|n_{2m,1*}| \cdot t_{1*} \cdot |M_{2k,acc,1*}{}^3| + \ldots + |n_{2m,n*}| \cdot t_{n*} \cdot |M_{2k,acc,n*}{}^3|}{|n_{2m,1*}| \cdot t_{1*} + \ldots + |n_{2m,n*}| \cdot t_{n*}}} \leq M_{2kN}$$

$$F_{2rad,eq*} = \sqrt[3]{\frac{|n_{2m,1*}| \cdot t_{1*} \cdot |F_{2rad,acc,1*}{}^3| + \ldots + |n_{2m,n*}| \cdot t_{n*} \cdot |F_{2rad,acc,n*}{}^3|}{|n_{2m,1*}| \cdot t_{1*} + \ldots + |n_{2m,n*}| \cdot t_{n*}}} \leq F_{2radN}$$

$$F_{2ax,eq*} \leq F_{2axN}$$

The following apply to the bearing service life L_{10h} (ED_{10} ≤ 40%):

L_{10h} > 10000 h with 1 < M_{2kN}/M_{2k*} < 1.25

L_{10h} > 20000 h with 1.25 < M_{2kN}/M_{2k*} < 1.5

L_{10h} > 30000 h with 1.5 < M_{2kN}/M_{2k*}

For different duty cycles:

$$L_{10h} > L_{10h(ED_{10}=40\%)} \cdot \frac{40\%}{ED_{10}}$$

3.6.3 Recommendation for radial shaft seal rings

For a duty cycle > 60% and higher surrounding temperatures, we recommend radial shaft seal rings made of FKM at the output.

Properties:

- Excellent temperature resistance
- High chemical stability
- Very good resistance to aging
- Excellent resistance in oils and greases
- For use in the food, beverage and pharmaceutical industries

Leak-proofness

Our gear units are equipped with high-quality radial shaft seal rings and checked for leaks. However, a leak cannot be fully ruled out over the length of use of a gear unit. If you use a gear unit with goods incompatible with the lubricant, you must take measures to prevent direct contact with the gear unit lubricant in case of a leak.

3.6.4 Reverse operation

To ensure lubrication for circulating gearing parts during cyclic reverse operation from ± 20° to ± 90° at the output, pay careful attention to the position of the output shaft for the horizontal mounting of the gear unit, as shown in the diagrams below.

The images show the center position of reverse operation.

Cyclic reverse operation ≤ ± 20° on request.

Size 3 – 10

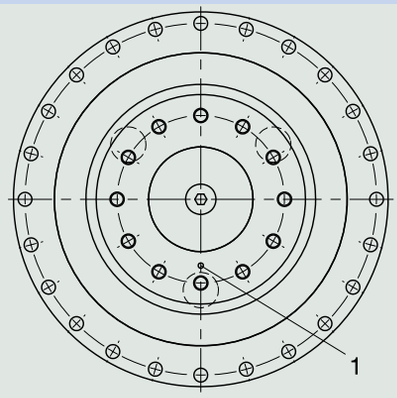

1 Position of the mark: bottom

Please note that the hole pattern may be different, depending on the size of the planetary gear unit.

3.7 Additional documentation

Additional documentation related to the product can be found at
http://www.stoeber.de/en/downloads/

Enter the ID of the documentation in the Search... field.

Documentation	ID
Operating manual for P/PE/PH/PHQ/PHV planetary gear units and planetary geared motors	443149_en

4 PHQ planetary geared motors

Table of contents

4.1 Overview 68

4.2 Selection tables 69

4.3 Dimensional drawings 77

4.3.1 PHQ4 – PHQ10 F shaft design (flange shaft) 78

4.3.2 PHQ11 F shaft design (flange shaft) 80

4.4 Type designation 81

4.4.1 Type designation PHQ4 – PHQ8 81

4.4.2 Type designation PHQ9 – PHQ11 82

4.4.3 Nameplate 82

4.5 Product description 83

4.5.1 Input options 83

4.5.2 Installation conditions 83

4.5.3 Mounting positions 83

4.5.4 Lubricants 83

4.5.5 Other product features 84

4.5.6 Direction of rotation 84

4.6 Project configuration 84

4.6.1 Calculation of the operating point 84

4.6.2 Permitted shaft loads for the output shaft 87

4.6.3 Recommendation for radial shaft seal rings 88

4.6.4 Reverse operation 89

4.7 Additional documentation 89

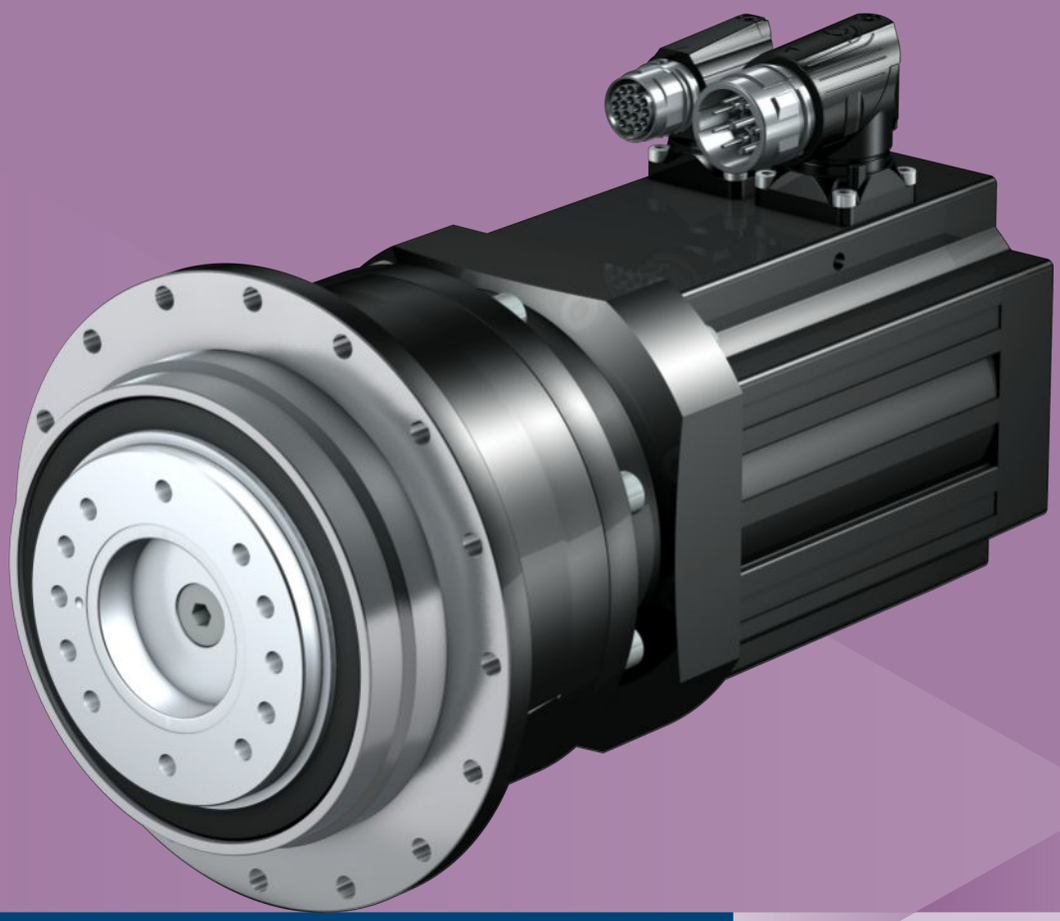

4 Planetary geared motors PHQ

4.1 Overview

Quattro-Power for maximum power density

Features

Power density	★★★★★
Backlash	★★★★★
Price category	€€€€
Shaft load	★★★★★
Smooth operation	★★★★☆
Torsional stiffness	★★★★★
Mass moment of inertia	★★★★★
Helical gearing	✓
Maintenance-free	✓
Any mounting position (single/two stage)	✓
High power density	✓
Continuous operation without cooling	✓
Stiff output bearings due to pretension	✓
Reinforced output bearing (PHQ4 – PHQ5)	✓ (optional)
Compact and highly dynamic due to direct motor attachment	✓

Key ★☆☆☆☆ good | ★★★★★ excellent
€ Economy | €€€€€ Premium

Technical data

i	5.5 – 600
M_{2acc}	45 – 22000 Nm
$\Delta\phi_2$	1 – 3 arcmin
η_{get}	90 – 96 %

4.2 Selection tables

The technical data specified in the selection tables applies to:

- Installation altitudes up to 1000 m above sea level
- Surrounding temperatures from 0 °C to 40 °C
- Drives with convection-cooled motors (e.g. EZ401**U**)

For the technical data on drives with forced ventilated motors (e.g. EZ401**B**), refer to http://configurator.stoeber.de.

In the case of the version with a reinforced bearing and gear ratios ≤ 5, the maximum permitted input speed n_{1maxZB} is reduced. You can find values at http://configurator.stoeber.de

An explanation of the formula symbols can be found in Chapter [▶ 23.1].

n_{2N} [rpm]	M_{2N} [Nm]	$M_{2,0}$ [Nm]	a_{th}	S	Type	M_{2acc} [Nm]	M_{2accHT} [Nm]	M_{2NOT} [Nm]	i	i_{exakt}	n_{1maxDB} [rpm]	n_{1maxZB} [rpm]	J_1 [kgcm²]	$\Delta\varphi_2$ [arcmin]	$\Delta\varphi_{2red}$ [arcmin]	C_2 [Nm/ arcmin]	m [kg]
PHQ4 (n_{1N} = 3000 rpm, $M_{2acc,max}$ = 200 Nm)																	
55	48	49	0.6	2.7	PHQ432_0550 EZ301U	140	140	400	55.00	55/1	4500	8000	0.21	3.0	1.0	38	5.8
55	81	86	1.0	1.6	PHQ432_0550 EZ302U	200	250	400	55.00	55/1	4500	8000	0.31	3.0	1.0	38	6.4
55	106	112	1.3	1.2	PHQ432_0550 EZ303U	200	250	400	55.00	55/1	4500	8000	0.42	3.0	1.0	38	6.9
78	33	34	0.7	3.9	PHQ432_0390 EZ301U	100	100	400	38.50	77/2	4500	8000	0.23	3.0	1.0	40	5.8
78	57	60	1.2	2.3	PHQ432_0390 EZ302U	180	180	400	38.50	77/2	4500	8000	0.33	3.0	1.0	40	6.4
78	74	78	1.5	1.8	PHQ432_0390 EZ303U	200	250	400	38.50	77/2	4500	8000	0.44	3.0	1.0	40	6.9
78	100	107	2.0	1.3	PHQ432_0390 EZ401U	200	250	400	38.50	77/2	4500	8000	0.97	3.0	1.0	40	8.3
109	41	43	1.5	3.0	PHQ432_0280 EZ302U	130	130	400	27.50	55/2	4500	8000	0.37	3.0	1.0	40	6.4
109	53	56	1.9	2.3	PHQ432_0280 EZ303U	180	180	400	27.50	55/2	4500	8000	0.48	3.0	1.0	40	6.9
109	72	77	2.6	1.7	PHQ432_0280 EZ401U	200	220	400	27.50	55/2	4500	8000	1.0	3.0	1.0	40	8.3
136	33	34	1.7	3.7	PHQ432_0220 EZ302U	100	100	400	22.00	22/1	4000	8000	0.41	3.0	1.0	41	6.4
136	42	45	2.2	2.8	PHQ432_0220 EZ303U	140	140	400	22.00	22/1	4000	8000	0.52	3.0	1.0	41	6.9
136	57	61	2.9	2.1	PHQ432_0220 EZ401U	170	170	400	22.00	22/1	4000	8000	1.1	3.0	1.0	41	8.3
136	96	106	4.9	1.2	PHQ432_0220 EZ402U	200	240	400	22.00	22/1	4000	8000	1.8	3.0	1.0	41	9.4
545	23	25	4.8	4.2	PHQ431_0055 EZ501U	84	84	400	5.500	11/2	3000	6000	3.2	3.0	1.0	44	8.0
545	25	27	5.2	3.8	PHQ431_0055 EZ402U	84	84	400	5.500	11/2	3000	6000	1.9	3.0	1.0	44	8.1
545	36	45	7.7	2.6	PHQ431_0055 EZ404U	150	150	400	5.500	11/2	3000	6000	3.2	3.0	1.0	44	10
545	39	42	8.2	2.4	PHQ431_0055 EZ502U	160	160	400	5.500	11/2	3000	6000	5.5	3.0	1.0	44	9.5
545	51	59	11	1.9	PHQ431_0055 EZ503U	200	220	400	5.500	11/2	3000	6000	7.8	3.0	1.0	44	11
545	71	84	15	1.3	PHQ431_0055 EZ505U	200	220	400	5.500	11/2	3000	6000	12	3.0	1.0	44	14
PHQ4 (n_{1N} = 6000 rpm, $M_{2acc,max}$ = 200 Nm)																	
109	46	49	0.7	2.3	PHQ432_0550 EZ301U	140	140	400	55.00	55/1	4500	8000	0.21	3.0	1.0	38	5.8
109	77	86	1.1	1.3	PHQ432_0550 EZ302U	200	250	400	55.00	55/1	4500	8000	0.31	3.0	1.0	38	6.4
109	100	115	1.5	1.0	PHQ432_0550 EZ303U	200	250	400	55.00	55/1	4500	8000	0.42	3.0	1.0	38	6.9
156	32	34	0.8	3.2	PHQ432_0390 EZ301U	100	100	400	38.50	77/2	4500	8000	0.23	3.0	1.0	40	5.8
156	54	60	1.4	1.9	PHQ432_0390 EZ302U	180	180	400	38.50	77/2	4500	8000	0.33	3.0	1.0	40	6.4
156	70	81	1.8	1.5	PHQ432_0390 EZ303U	200	250	400	38.50	77/2	4500	8000	0.44	3.0	1.0	40	6.9
156	82	100	2.1	1.3	PHQ432_0390 EZ401U	200	250	400	38.50	77/2	4500	8000	0.97	3.0	1.0	40	8.3
218	23	24	1.0	4.2	PHQ432_0280 EZ301U	72	72	400	27.50	55/2	4500	8000	0.27	3.0	1.0	40	5.8
218	38	43	1.8	2.5	PHQ432_0280 EZ302U	130	130	400	27.50	55/2	4500	8000	0.37	3.0	1.0	40	6.4
218	50	58	2.3	1.9	PHQ432_0280 EZ303U	180	180	400	27.50	55/2	4500	8000	0.48	3.0	1.0	40	6.9
218	59	72	2.7	1.6	PHQ432_0280 EZ401U	200	220	400	27.50	55/2	4500	8000	1.0	3.0	1.0	40	8.3
218	90	125	4.1	1.1	PHQ432_0280 EZ402U	200	250	400	27.50	55/2	4500	8000	1.7	3.0	1.0	40	9.4
273	31	34	2.0	3.1	PHQ432_0220 EZ302U	100	100	400	22.00	22/1	4000	8000	0.41	3.0	1.0	41	6.4
273	40	46	2.6	2.4	PHQ432_0220 EZ303U	140	140	400	22.00	22/1	4000	8000	0.52	3.0	1.0	41	6.9
273	47	57	3.0	2.0	PHQ432_0220 EZ401U	170	170	400	22.00	22/1	4000	8000	1.1	3.0	1.0	41	8.3
273	72	100	4.6	1.3	PHQ432_0220 EZ402U	200	240	400	22.00	22/1	4000	8000	1.8	3.0	1.0	41	9.4
1091	18	23	4.8	4.2	PHQ431_0055 EZ501U	84	84	400	5.500	11/2	3000	6000	3.2	3.0	1.0	44	8.0
1091	18	26	4.9	4.1	PHQ431_0055 EZ402U	84	84	400	5.500	11/2	3000	6000	1.9	3.0	1.0	44	8.1
1091	27	41	7.3	2.8	PHQ431_0055 EZ502U	160	160	400	5.500	11/2	3000	6000	5.5	3.0	1.0	44	9.5
1091	31	44	8.1	2.5	PHQ431_0055 EZ404U	150	150	400	5.500	11/2	3000	6000	3.2	3.0	1.0	44	10
1091	33	56	8.7	2.3	PHQ431_0055 EZ503U	200	220	400	5.500	11/2	3000	6000	7.8	3.0	1.0	44	11
PHQ5 (n_{1N} = 3000 rpm, $M_{2acc,max}$ = 550 Nm)																	
55	143	153	0.8	2.2	PHQ532_0550 EZ401U	430	430	950	55.00	55/1	4000	8000	0.99	3.0	1.0	95	11
55	220	240	1.2	1.5	PHQ532_0550 EZ501U	500	500	950	55.00	55/1	4000	8000	3.0	3.0	1.0	95	12
55	240	266	1.3	1.3	PHQ532_0550 EZ402U	500	500	950	55.00	55/1	4000	8000	1.7	3.0	1.0	95	12
78	100	107	0.9	3.2	PHQ532_0390 EZ401U	300	300	950	38.50	77/2	4000	8000	1.0	3.0	1.0	100	11
78	154	168	1.4	2.1	PHQ532_0390 EZ501U	530	550	950	38.50	77/2	4000	8000	3.0	3.0	1.0	100	12
78	168	186	1.5	1.9	PHQ532_0390 EZ402U	530	550	950	38.50	77/2	4000	8000	1.7	3.0	1.0	100	12
78	247	308	2.3	1.3	PHQ532_0390 EZ404U	530	550	950	38.50	77/2	4000	8000	3.1	3.0	1.0	100	14

n_{2N} [rpm]	M_{2N} [Nm]	$M_{2,0}$ [Nm]	a_{th}	S	Type	M_{2acc} [Nm]	M_{2accHT} [Nm]	M_{2NOT} [Nm]	i	i_{exakt}	n_{1maxDB} [rpm]	n_{1maxZB} [rpm]	J_1 [kgcm²]	$\Delta\varphi_2$ [arcmin]	$\Delta\varphi_{2red}$ [arcmin]	C_2 [Nm/ arcmin]	m [kg]
PHQ5 (n_{1N} = 3000 rpm, $M_{2acc,max}$ = 550 Nm)																	
78	265	286	2.4	1.2	PHQ532_0390 EZ502U	530	550	950	38.50	77/2	4000	8000	5.3	3.0	1.0	100	14
109	72	77	1.2	4.2	PHQ532_0280 EZ401U	220	220	950	27.50	55/2	3700	7500	1.1	3.0	1.0	102	11
109	110	120	1.8	2.7	PHQ532_0280 EZ501U	410	410	950	27.50	55/2	3700	7500	3.1	3.0	1.0	102	12
109	120	133	1.9	2.5	PHQ532_0280 EZ402U	410	410	950	27.50	55/2	3700	7500	1.8	3.0	1.0	102	12
109	176	220	2.9	1.7	PHQ532_0280 EZ404U	540	560	950	27.50	55/2	3700	7500	3.2	3.0	1.0	102	14
109	189	205	3.1	1.6	PHQ532_0280 EZ502U	540	560	950	27.50	55/2	3700	7500	5.4	3.0	1.0	102	14
109	248	284	4.0	1.2	PHQ532_0280 EZ503U	540	560	950	27.50	55/2	3700	7500	7.8	3.0	1.0	102	15
136	88	96	2.1	3.3	PHQ532_0220 EZ501U	330	330	950	22.00	22/1	3500	7000	3.2	3.0	1.0	103	12
136	96	106	2.2	3.0	PHQ532_0220 EZ402U	330	330	950	22.00	22/1	3500	7000	1.9	3.0	1.0	103	12
136	141	176	3.3	2.1	PHQ532_0220 EZ404U	480	530	950	22.00	22/1	3500	7000	3.3	3.0	1.0	103	14
136	151	164	3.5	1.9	PHQ532_0220 EZ502U	480	530	950	22.00	22/1	3500	7000	5.5	3.0	1.0	103	14
136	198	227	4.6	1.5	PHQ532_0220 EZ503U	480	530	950	22.00	22/1	3500	7000	7.9	3.0	1.0	103	15
136	276	327	6.5	1.1	PHQ532_0220 EZ505U	480	530	950	22.00	22/1	3500	7000	12	3.0	1.0	103	18
545	63	76	6.4	3.5	PHQ531_0055 EZ702U	220	220	950	5.500	11/2	2500	5000	15	3.0	1.0	107	16
545	87	110	8.8	2.6	PHQ531_0055 EZ703U	340	340	950	5.500	11/2	2500	5000	22	3.0	1.0	107	18
545	112	159	11	2.0	PHQ531_0055 EZ705U	550	550	950	5.500	11/2	2500	5000	35	3.0	1.0	107	23
PHQ5 (n_{1N} = 4500 rpm, $M_{2acc,max}$ = 550 Nm)																	
164	243	391	4.5	1.1	PHQ532_0280 EZ505U	540	560	950	27.50	55/2	3700	7500	12	3.0	1.0	102	18
205	194	313	5.2	1.3	PHQ532_0220 EZ505U	480	530	950	22.00	22/1	3500	7000	12	3.0	1.0	103	18
818	64	106	7.3	3.0	PHQ531_0055 EZ703U	340	340	950	5.500	11/2	2500	5000	22	3.0	1.0	107	18
818	87	158	10	2.2	PHQ531_0055 EZ705U	550	550	950	5.500	11/2	2500	5000	35	3.0	1.0	107	23
PHQ5 (n_{1N} = 6000 rpm, $M_{2acc,max}$ = 540 Nm)																	
109	118	143	0.8	2.2	PHQ532_0550 EZ401U	430	430	950	55.00	55/1	4000	8000	0.99	3.0	1.0	95	11
109	174	225	1.2	1.5	PHQ532_0550 EZ501U	500	500	950	55.00	55/1	4000	8000	3.0	3.0	1.0	95	12
109	179	251	1.2	1.4	PHQ532_0550 EZ402U	500	500	950	55.00	55/1	4000	8000	1.7	3.0	1.0	95	12
156	82	100	1.0	3.1	PHQ532_0390 EZ401U	300	300	950	38.50	77/2	4000	8000	1.0	3.0	1.0	100	11
156	122	158	1.4	2.1	PHQ532_0390 EZ501U	530	550	950	38.50	77/2	4000	8000	3.0	3.0	1.0	100	12
156	125	175	1.4	2.0	PHQ532_0390 EZ402U	530	550	950	38.50	77/2	4000	8000	1.7	3.0	1.0	100	12
156	186	279	2.1	1.4	PHQ532_0390 EZ502U	530	550	950	38.50	77/2	4000	8000	5.3	3.0	1.0	100	14
156	208	301	2.4	1.2	PHQ532_0390 EZ404U	530	550	950	38.50	77/2	4000	8000	3.1	3.0	1.0	100	14
156	222	380	2.6	1.1	PHQ532_0390 EZ503U	530	550	950	38.50	77/2	4000	8000	7.7	3.0	1.0	100	15
218	59	72	1.2	4.0	PHQ532_0280 EZ401U	220	220	950	27.50	55/2	3700	7500	1.1	3.0	1.0	102	11
218	87	113	1.8	2.7	PHQ532_0280 EZ501U	410	410	950	27.50	55/2	3700	7500	3.1	3.0	1.0	102	12
218	90	125	1.8	2.7	PHQ532_0280 EZ402U	410	410	950	27.50	55/2	3700	7500	1.8	3.0	1.0	102	12
218	133	199	2.7	1.8	PHQ532_0280 EZ502U	540	560	950	27.50	55/2	3700	7500	5.4	3.0	1.0	102	14
218	148	215	3.0	1.6	PHQ532_0280 EZ404U	540	560	950	27.50	55/2	3700	7500	3.2	3.0	1.0	102	14
218	159	271	3.2	1.5	PHQ532_0280 EZ503U	540	560	950	27.50	55/2	3700	7500	7.8	3.0	1.0	102	15
273	47	57	1.4	4.9	PHQ532_0220 EZ401U	170	170	950	22.00	22/1	3500	7000	1.2	3.0	1.0	103	11
273	70	90	2.1	3.3	PHQ532_0220 EZ501U	330	330	950	22.00	22/1	3500	7000	3.2	3.0	1.0	103	12
273	72	100	2.1	3.2	PHQ532_0220 EZ402U	330	330	950	22.00	22/1	3500	7000	1.9	3.0	1.0	103	12
273	106	160	3.1	2.2	PHQ532_0220 EZ502U	480	530	950	22.00	22/1	3500	7000	5.5	3.0	1.0	103	14
273	119	172	3.5	1.9	PHQ532_0220 EZ404U	480	530	950	22.00	22/1	3500	7000	3.3	3.0	1.0	103	14
273	127	217	3.7	1.8	PHQ532_0220 EZ503U	480	530	950	22.00	22/1	3500	7000	7.9	3.0	1.0	103	15
PHQ7 (n_{1N} = 2000 rpm, $M_{2acc,max}$ = 1050 Nm)																	
364	231	349	12	2.2	PHQ731_0055 EZ805U	1050	1050	2100	5.500	11/2	2200	5000	135	3.0	1.0	235	55
PHQ7 (n_{1N} = 3000 rpm, $M_{2acc,max}$ = 1050 Nm)																	
14	554	594	0.2	1.2	PHQ733_2200 EZ401U	1050	1050	2100	220.0	220/1	4000	7000	0.99	3.0	1.0	222	20
16	485	520	0.2	1.4	PHQ733_1930 EZ401U	1050	1050	2100	192.5	385/2	4000	7000	1.0	3.0	1.0	223	20
19	388	416	0.3	1.8	PHQ733_1540 EZ401U	1050	1050	2100	154.0	154/1	4000	7000	1.0	3.0	1.0	223	20
19	596	651	0.4	1.1	PHQ733_1540 EZ501U	1050	1050	2100	154.0	154/1	4000	7000	3.0	3.0	1.0	223	21
19	651	721	0.4	1.0	PHQ733_1540 EZ402U	1050	1050	2100	154.0	154/1	4000	7000	1.7	3.0	1.0	223	21
22	347	371	0.3	2.0	PHQ733_1380 EZ401U	1050	1050	2100	137.5	275/2	3700	6500	1.1	3.0	1.0	224	20
22	532	582	0.4	1.3	PHQ733_1380 EZ501U	1050	1050	2100	137.5	275/2	3700	6500	3.1	3.0	1.0	224	21
22	582	644	0.4	1.2	PHQ733_1380 EZ402U	1050	1050	2100	137.5	275/2	3700	6500	1.8	3.0	1.0	224	21
27	277	297	0.3	2.5	PHQ733_1100 EZ401U	840	840	2100	110.0	110/1	3300	6000	1.2	3.0	1.0	224	20
27	426	465	0.5	1.6	PHQ733_1100 EZ501U	1050	1050	2100	110.0	110/1	3300	6000	3.2	3.0	1.0	224	21
27	465	515	0.5	1.5	PHQ733_1100 EZ402U	1050	1050	2100	110.0	110/1	3300	6000	1.9	3.0	1.0	224	21
34	222	238	0.3	3.1	PHQ733_0880 EZ401U	670	670	2100	88.00	88/1	3300	6000	1.3	3.0	1.0	224	20
34	341	372	0.5	2.0	PHQ733_0880 EZ501U	1050	1050	2100	88.00	88/1	3300	6000	3.2	3.0	1.0	224	21
34	372	412	0.6	1.8	PHQ733_0880 EZ402U	1050	1050	2100	88.00	88/1	3300	6000	2.0	3.0	1.0	224	21
34	546	681	0.8	1.2	PHQ733_0880 EZ404U	1050	1050	2100	88.00	88/1	3300	6000	3.3	3.0	1.0	224	23
34	586	634	0.9	1.2	PHQ733_0880 EZ502U	1050	1050	2100	88.00	88/1	3300	6000	5.5	3.0	1.0	224	22
55	220	240	0.7	3.1	PHQ732_0550 EZ501U	820	820	2100	55.00	55/1	3700	7000	3.1	3.0	1.0	213	18
55	379	409	1.1	1.8	PHQ732_0550 EZ502U	1050	1050	2100	55.00	55/1	3700	7000	5.4	3.0	1.0	213	20

n_{2N} [rpm]	M_{2N} [Nm]	$M_{2,0}$ [Nm]	a_{th}	S	Type	M_{2acc} [Nm]	M_{2accHT} [Nm]	M_{2NOT} [Nm]	i	i_{exakt}	n_{1maxDB} [rpm]	n_{1maxZB} [rpm]	J_1 [kgcm²]	$\Delta\varphi_2$ [arcmin]	$\Delta\varphi_{2red}$ [arcmin]	C_2 [Nm/ arcmin]	m [kg]
PHQ7 (n_{1N} = 3000 rpm, $M_{2acc,max}$ = 1050 Nm)																	
55	379	425	1.1	1.8	PHQ732_0550 EZ701U	1020	1020	2100	55.00	55/1	3700	7000	8.7	3.0	1.0	213	22
55	496	568	1.5	1.4	PHQ732_0550 EZ503U	1050	1050	2100	55.00	55/1	3700	7000	7.7	3.0	1.0	213	21
55	614	737	1.9	1.1	PHQ732_0550 EZ702U	1050	1050	2100	55.00	55/1	3700	7000	14	3.0	1.0	213	24
78	154	168	0.8	4.4	PHQ732_0390 EZ501U	570	570	2100	38.50	77/2	3700	7000	3.3	3.0	1.0	221	18
78	265	286	1.4	2.6	PHQ732_0390 EZ502U	1050	1050	2100	38.50	77/2	3700	7000	5.6	3.0	1.0	221	20
78	265	297	1.4	2.6	PHQ732_0390 EZ701U	720	720	2100	38.50	77/2	3700	7000	8.9	3.0	1.0	221	22
78	347	397	1.8	2.0	PHQ732_0390 EZ503U	1050	1050	2100	38.50	77/2	3700	7000	8.0	3.0	1.0	221	21
78	430	516	2.2	1.6	PHQ732_0390 EZ702U	1050	1050	2100	38.50	77/2	3700	7000	14	3.0	1.0	221	24
78	483	573	2.5	1.4	PHQ732_0390 EZ505U	1050	1050	2100	38.50	77/2	3700	7000	13	3.0	1.0	221	24
78	591	745	3.1	1.2	PHQ732_0390 EZ703U	1050	1050	2100	38.50	77/2	3700	7000	22	3.0	1.0	221	26
109	189	205	1.7	3.4	PHQ732_0280 EZ502U	790	790	2100	27.50	55/2	3500	7000	5.9	3.0	1.0	224	20
109	189	212	1.7	3.4	PHQ732_0280 EZ701U	510	510	2100	27.50	55/2	3500	7000	9.2	3.0	1.0	224	22
109	248	284	2.2	2.6	PHQ732_0280 EZ503U	1050	1050	2100	27.50	55/2	3500	7000	8.3	3.0	1.0	224	21
109	307	368	2.8	2.1	PHQ732_0280 EZ702U	1050	1050	2100	27.50	55/2	3500	7000	14	3.0	1.0	224	24
109	345	409	3.1	1.9	PHQ732_0280 EZ505U	1050	1050	2100	27.50	55/2	3500	7000	13	3.0	1.0	224	24
109	422	532	3.8	1.5	PHQ732_0280 EZ703U	1050	1050	2100	27.50	55/2	3500	7000	22	3.0	1.0	224	26
109	545	772	4.9	1.2	PHQ732_0280 EZ705U	1050	1050	2100	27.50	55/2	3500	7000	35	3.0	1.0	224	32
136	151	164	1.9	4.3	PHQ732_0220 EZ502U	630	630	1800	22.00	22/1	3000	6000	6.3	3.0	1.0	226	20
136	151	170	1.9	4.3	PHQ732_0220 EZ701U	410	410	1800	22.00	22/1	3000	6000	9.6	3.0	1.0	226	22
136	198	227	2.5	3.3	PHQ732_0220 EZ503U	880	880	1800	22.00	22/1	3000	6000	8.7	3.0	1.0	226	21
136	246	295	3.1	2.6	PHQ732_0220 EZ702U	840	840	1800	22.00	22/1	3000	6000	15	3.0	1.0	226	24
136	276	327	3.5	2.4	PHQ732_0220 EZ505U	900	1000	1800	22.00	22/1	3000	6000	13	3.0	1.0	226	24
136	338	426	4.2	1.9	PHQ732_0220 EZ703U	900	1000	1800	22.00	22/1	3000	6000	23	3.0	1.0	226	26
136	436	618	5.5	1.5	PHQ732_0220 EZ705U	900	1000	1800	22.00	22/1	3000	6000	35	3.0	1.0	226	32
545	118	196	6.6	4.0	PHQ731_0055 EZ802U	530	530	2100	5.500	11/2	2200	5000	61	3.0	1.0	235	36
545	140	254	7.9	3.4	PHQ731_0055 EZ803U	770	770	2100	5.500	11/2	2200	5000	86	3.0	1.0	235	42
PHQ7 (n_{1N} = 4500 rpm, $M_{2acc,max}$ = 1050 Nm)																	
82	486	783	1.7	1.2	PHQ732_0550 EZ505U	1050	1050	2100	55.00	55/1	3700	7000	12	3.0	1.0	213	24
117	340	548	2.0	1.7	PHQ732_0390 EZ505U	1050	1050	2100	38.50	77/2	3700	7000	13	3.0	1.0	221	24
117	433	716	2.6	1.4	PHQ732_0390 EZ703U	1050	1050	2100	38.50	77/2	3700	7000	22	3.0	1.0	221	26
164	243	391	2.5	2.3	PHQ732_0280 EZ505U	1050	1050	2100	27.50	55/2	3500	7000	13	3.0	1.0	224	24
164	309	512	3.2	1.8	PHQ732_0280 EZ703U	1050	1050	2100	27.50	55/2	3500	7000	22	3.0	1.0	224	26
164	419	767	4.3	1.4	PHQ732_0280 EZ705U	1050	1050	2100	27.50	55/2	3500	7000	35	3.0	1.0	224	32
205	194	313	2.8	2.9	PHQ732_0220 EZ505U	900	1000	1800	22.00	22/1	3000	6000	13	3.0	1.0	226	24
205	248	409	3.5	2.3	PHQ732_0220 EZ703U	900	1000	1800	22.00	22/1	3000	6000	23	3.0	1.0	226	26
205	336	614	4.8	1.7	PHQ732_0220 EZ705U	900	1000	1800	22.00	22/1	3000	6000	35	3.0	1.0	226	32
PHQ7 (n_{1N} = 6000 rpm, $M_{2acc,max}$ = 1050 Nm)																	
27	455	554	0.2	1.2	PHQ733_2200 EZ401U	1050	1050	2100	220.0	220/1	4000	7000	0.99	3.0	1.0	222	20
31	398	485	0.2	1.4	PHQ733_1930 EZ401U	1050	1050	2100	192.5	385/2	4000	7000	1.0	3.0	1.0	223	20
39	319	388	0.3	1.7	PHQ733_1540 EZ401U	1050	1050	2100	154.0	154/1	4000	7000	1.0	3.0	1.0	223	20
39	471	610	0.4	1.1	PHQ733_1540 EZ501U	1050	1050	2100	154.0	154/1	4000	7000	3.0	3.0	1.0	223	21
39	485	679	0.4	1.1	PHQ733_1540 EZ402U	1050	1050	2100	154.0	154/1	4000	7000	1.7	3.0	1.0	223	21
44	285	347	0.3	1.9	PHQ733_1380 EZ401U	1050	1050	2100	137.5	275/2	3700	6500	1.1	3.0	1.0	224	20
44	421	545	0.4	1.3	PHQ733_1380 EZ501U	1050	1050	2100	137.5	275/2	3700	6500	3.1	3.0	1.0	224	21
44	433	606	0.4	1.2	PHQ733_1380 EZ402U	1050	1050	2100	137.5	275/2	3700	6500	1.8	3.0	1.0	224	21
55	228	277	0.3	2.4	PHQ733_1100 EZ401U	840	840	2100	110.0	110/1	3300	6000	1.2	3.0	1.0	224	20
55	337	436	0.5	1.6	PHQ733_1100 EZ501U	1050	1050	2100	110.0	110/1	3300	6000	3.2	3.0	1.0	224	21
55	347	485	0.5	1.6	PHQ733_1100 EZ402U	1050	1050	2100	110.0	110/1	3300	6000	1.9	3.0	1.0	224	21
55	515	772	0.7	1.0	PHQ733_1100 EZ502U	1050	1050	2100	110.0	110/1	3300	6000	5.5	3.0	1.0	224	22
68	182	222	0.3	3.0	PHQ733_0880 EZ401U	670	670	2100	88.00	88/1	3300	6000	1.3	3.0	1.0	224	20
68	269	348	0.5	2.0	PHQ733_0880 EZ501U	1050	1050	2100	88.00	88/1	3300	6000	3.2	3.0	1.0	224	21
68	277	388	0.5	1.9	PHQ733_0880 EZ402U	1050	1050	2100	88.00	88/1	3300	6000	2.0	3.0	1.0	224	21
68	412	618	0.8	1.3	PHQ733_0880 EZ502U	1050	1050	2100	88.00	88/1	3300	6000	5.5	3.0	1.0	224	22
68	459	665	0.9	1.2	PHQ733_0880 EZ404U	1050	1050	2100	88.00	88/1	3300	6000	3.3	3.0	1.0	224	23
109	174	225	0.7	3.1	PHQ732_0550 EZ501U	820	820	2100	55.00	55/1	3700	7000	3.1	3.0	1.0	213	18
109	266	399	1.0	2.0	PHQ732_0550 EZ502U	1050	1050	2100	55.00	55/1	3700	7000	5.4	3.0	1.0	213	20
109	266	404	1.0	2.0	PHQ732_0550 EZ701U	1020	1020	2100	55.00	55/1	3700	7000	8.7	3.0	1.0	213	22
109	317	542	1.2	1.7	PHQ732_0550 EZ503U	1050	1050	2100	55.00	55/1	3700	7000	7.7	3.0	1.0	213	21
109	368	731	1.4	1.5	PHQ732_0550 EZ702U	1050	1050	2100	55.00	55/1	3700	7000	14	3.0	1.0	213	24
156	122	158	0.8	4.4	PHQ732_0390 EZ501U	570	570	2100	38.50	77/2	3700	7000	3.3	3.0	1.0	221	18
156	186	279	1.2	2.9	PHQ732_0390 EZ502U	1050	1050	2100	38.50	77/2	3700	7000	5.6	3.0	1.0	221	20
156	186	283	1.2	2.9	PHQ732_0390 EZ701U	720	720	2100	38.50	77/2	3700	7000	8.9	3.0	1.0	221	22
156	222	380	1.4	2.4	PHQ732_0390 EZ503U	1050	1050	2100	38.50	77/2	3700	7000	8.0	3.0	1.0	221	21
156	258	512	1.7	2.1	PHQ732_0390 EZ702U	1050	1050	2100	38.50	77/2	3700	7000	14	3.0	1.0	221	24
218	133	199	1.5	3.9	PHQ732_0280 EZ502U	790	790	2100	27.50	55/2	3500	7000	5.9	3.0	1.0	224	20

n_{2N} [rpm]	M_{2N} [Nm]	$M_{2,0}$ [Nm]	a_{th}	S	Type	M_{2acc} [Nm]	M_{2accHT} [Nm]	M_{2NOT} [Nm]	i	i_{exakt}	n_{1maxDB} [rpm]	n_{1maxZB} [rpm]	J_1 [kgcm²]	$\Delta\varphi_2$ [arcmin]	$\Delta\varphi_{2red}$ [arcmin]	C_2 [Nm/ arcmin]	m [kg]
PHQ7 (n_{1N} = 6000 rpm, $M_{2acc,max}$ = 1050 Nm)																	
218	133	202	1.5	3.9	PHQ732_0280 EZ701U	510	510	2100	27.50	55/2	3500	7000	9.2	3.0	1.0	224	22
218	159	271	1.8	3.3	PHQ732_0280 EZ503U	1050	1050	2100	27.50	55/2	3500	7000	8.3	3.0	1.0	224	21
218	184	366	2.1	2.8	PHQ732_0280 EZ702U	1050	1050	2100	27.50	55/2	3500	7000	14	3.0	1.0	224	24
273	106	160	1.7	4.8	PHQ732_0220 EZ502U	630	630	1800	22.00	22/1	3000	6000	6.3	3.0	1.0	226	20
273	106	162	1.7	4.8	PHQ732_0220 EZ701U	410	410	1800	22.00	22/1	3000	6000	9.6	3.0	1.0	226	22
273	127	217	2.0	4.1	PHQ732_0220 EZ503U	880	880	1800	22.00	22/1	3000	6000	8.7	3.0	1.0	226	21
273	147	293	2.3	3.5	PHQ732_0220 EZ702U	840	840	1800	22.00	22/1	3000	6000	15	3.0	1.0	226	24
PHQ8 (n_{1N} = 2000 rpm, $M_{2acc,max}$ = 2800 Nm)																	
73	1118	1691	4.1	1.5	PHQ832_0280 EZ805U	2800	3300	5090	27.50	55/2	2700	5500	135	3.0	1.0	715	80
91	894	1352	4.6	1.9	PHQ832_0220 EZ805U	2800	3300	5090	22.00	22/1	2500	4500	137	3.0	1.0	720	80
PHQ8 (n_{1N} = 3000 rpm, $M_{2acc,max}$ = 2800 Nm)																	
7.8	1490	1629	0.1	1.1	PHQ833_3850 EZ501U	2800	3300	5090	385.0	385/1	3700	6500	3.0	3.0	1.0	699	40
11	1064	1163	0.1	1.6	PHQ833_2750 EZ501U	2800	3300	5090	275.0	275/1	3700	6500	3.1	3.0	1.0	707	40
14	851	931	0.1	2.0	PHQ833_2200 EZ501U	2800	3170	5090	220.0	220/1	3700	6500	3.1	3.0	1.0	705	40
14	1465	1584	0.2	1.2	PHQ833_2200 EZ502U	2800	3300	5090	220.0	220/1	3700	6500	5.4	3.0	1.0	705	41
14	1465	1643	0.2	1.2	PHQ833_2200 EZ701U	2800	3300	5090	220.0	220/1	3700	6500	8.7	3.0	1.0	705	43
16	745	814	0.1	2.3	PHQ833_1930 EZ501U	2770	2770	5090	192.5	385/2	3700	6500	3.3	3.0	1.0	710	40
16	1282	1386	0.3	1.3	PHQ833_1930 EZ502U	2800	3300	5090	192.5	385/2	3700	6500	5.6	3.0	1.0	710	41
16	1282	1438	0.3	1.3	PHQ833_1930 EZ701U	2800	3300	5090	192.5	385/2	3700	6500	8.9	3.0	1.0	710	43
16	1681	1923	0.3	1.0	PHQ833_1930 EZ503U	2800	3300	5090	192.5	385/2	3700	6500	8.0	3.0	1.0	710	43
19	596	651	0.2	2.9	PHQ833_1540 EZ501U	2220	2220	5090	154.0	154/1	3700	6500	3.3	3.0	1.0	710	40
19	1026	1109	0.3	1.7	PHQ833_1540 EZ502U	2800	3300	5090	154.0	154/1	3700	6500	5.6	3.0	1.0	710	41
19	1026	1150	0.3	1.7	PHQ833_1540 EZ701U	2770	2770	5090	154.0	154/1	3700	6500	8.9	3.0	1.0	710	43
19	1344	1538	0.4	1.3	PHQ833_1540 EZ503U	2800	3300	5090	154.0	154/1	3700	6500	8.0	3.0	1.0	710	43
19	1663	1996	0.5	1.0	PHQ833_1540 EZ702U	2800	3300	5090	154.0	154/1	3700	6500	14	3.0	1.0	710	46
22	532	582	0.2	3.2	PHQ833_1380 EZ501U	1980	1980	5090	137.5	275/2	3500	6000	3.6	3.0	1.0	711	40
22	916	990	0.3	1.9	PHQ833_1380 EZ502U	2800	3300	5090	137.5	275/2	3500	6000	5.9	3.0	1.0	711	41
22	916	1027	0.3	1.9	PHQ833_1380 EZ701U	2480	2480	5090	137.5	275/2	3500	6000	9.2	3.0	1.0	711	43
22	1200	1374	0.4	1.4	PHQ833_1380 EZ503U	2800	3300	5090	137.5	275/2	3500	6000	8.3	3.0	1.0	711	43
22	1485	1782	0.5	1.1	PHQ833_1380 EZ702U	2800	3300	5090	137.5	275/2	3500	6000	14	3.0	1.0	711	46
22	1671	1980	0.6	1.0	PHQ833_1380 EZ505U	2800	3300	5090	137.5	275/2	3500	6000	13	3.0	1.0	711	46
27	426	465	0.2	4.0	PHQ833_1100 EZ501U	1580	1580	5090	110.0	110/1	3000	5000	4.0	3.0	1.0	712	40
27	733	792	0.3	2.3	PHQ833_1100 EZ502U	2800	3070	5090	110.0	110/1	3000	5000	6.3	3.0	1.0	712	41
27	733	822	0.3	2.3	PHQ833_1100 EZ701U	1980	1980	5090	110.0	110/1	3000	5000	9.6	3.0	1.0	712	43
27	960	1099	0.4	1.8	PHQ833_1100 EZ503U	2800	3300	5090	110.0	110/1	3000	5000	8.7	3.0	1.0	712	43
27	1188	1426	0.6	1.4	PHQ833_1100 EZ702U	2800	3300	5090	110.0	110/1	3000	5000	15	3.0	1.0	712	46
27	1337	1584	0.6	1.3	PHQ833_1100 EZ505U	2800	3300	5090	110.0	110/1	3000	5000	13	3.0	1.0	712	46
27	1634	2059	0.8	1.0	PHQ833_1100 EZ703U	2800	3300	5090	110.0	110/1	3000	5000	23	3.0	1.0	712	48
34	341	372	0.2	5.0	PHQ833_0880 EZ501U	1270	1270	5090	88.00	88/1	3000	5000	4.1	3.0	1.0	712	40
34	586	634	0.4	2.9	PHQ833_0880 EZ502U	2460	2460	5090	88.00	88/1	3000	5000	6.4	3.0	1.0	712	41
34	586	657	0.4	2.9	PHQ833_0880 EZ701U	1580	1580	5090	88.00	88/1	3000	5000	9.7	3.0	1.0	712	43
34	768	879	0.5	2.2	PHQ833_0880 EZ503U	2800	3300	5090	88.00	88/1	3000	5000	8.8	3.0	1.0	712	43
34	950	1140	0.6	1.8	PHQ833_0880 EZ702U	2800	3250	5090	88.00	88/1	3000	5000	15	3.0	1.0	712	46
34	1069	1267	0.7	1.6	PHQ833_0880 EZ505U	2800	3300	5090	88.00	88/1	3000	5000	13	3.0	1.0	712	46
34	1307	1647	0.8	1.3	PHQ833_0880 EZ703U	2800	3300	5090	88.00	88/1	3000	5000	23	3.0	1.0	712	48
55	379	425	0.5	4.5	PHQ832_0550 EZ701U	1020	1020	5090	55.00	55/1	3000	6000	9.2	3.0	1.0	670	42
55	614	737	0.8	2.8	PHQ832_0550 EZ702U	2100	2100	5090	55.00	55/1	3000	6000	14	3.0	1.0	670	45
55	844	1064	1.1	2.0	PHQ832_0550 EZ703U	2700	2990	5090	55.00	55/1	3000	6000	22	3.0	1.0	670	47
55	1089	1545	1.4	1.6	PHQ832_0550 EZ705U	2700	2990	5090	55.00	55/1	3000	6000	35	3.0	1.0	670	52
55	1141	1898	1.5	1.5	PHQ832_0550 EZ802U	2700	2990	5090	55.00	55/1	3000	6000	59	3.0	1.0	670	61
78	430	516	1.0	4.0	PHQ832_0390 EZ702U	1470	1470	5090	38.50	77/2	3000	6000	15	3.0	1.0	701	45
78	591	745	1.3	2.9	PHQ832_0390 EZ703U	2330	2330	5090	38.50	77/2	3000	6000	23	3.0	1.0	701	47
78	763	1081	1.7	2.2	PHQ832_0390 EZ705U	2800	3300	5090	38.50	77/2	3000	6000	35	3.0	1.0	701	52
78	798	1328	1.8	2.1	PHQ832_0390 EZ802U	2800	3300	5090	38.50	77/2	3000	6000	59	3.0	1.0	701	61
78	952	1726	2.1	1.8	PHQ832_0390 EZ803U	2800	3300	5090	38.50	77/2	3000	6000	85	3.0	1.0	701	67
109	422	532	1.6	4.0	PHQ832_0280 EZ703U	1660	1660	5090	27.50	55/2	2700	5500	24	3.0	1.0	715	47
109	545	772	2.0	3.1	PHQ832_0280 EZ705U	2660	2660	5090	27.50	55/2	2700	5500	37	3.0	1.0	715	52
109	570	949	2.1	3.0	PHQ832_0280 EZ802U	2560	2560	5090	27.50	55/2	2700	5500	61	3.0	1.0	715	61
109	680	1233	2.5	2.5	PHQ832_0280 EZ803U	2800	3300	5090	27.50	55/2	2700	5500	86	3.0	1.0	715	67
136	436	618	2.3	3.9	PHQ832_0220 EZ705U	2130	2130	4750	22.00	22/1	2500	4500	38	3.0	1.0	720	52
136	456	759	2.4	3.7	PHQ832_0220 EZ802U	2050	2050	5090	22.00	22/1	2500	4500	62	3.0	1.0	720	61
136	544	986	2.8	3.1	PHQ832_0220 EZ803U	2800	2970	5090	22.00	22/1	2500	4500	88	3.0	1.0	720	67
PHQ8 (n_{1N} = 4500 rpm, $M_{2acc,max}$ = 2800 Nm)																	
29	1317	2121	0.4	1.1	PHQ833_1540 EZ505U	2800	3300	5090	154.0	154/1	3700	6500	13	3.0	1.0	710	46
33	1176	1893	0.4	1.3	PHQ833_1380 EZ505U	2800	3300	5090	137.5	275/2	3500	6000	13	3.0	1.0	711	46

n_{2N} [rpm]	M_{2N} [Nm]	$M_{2,0}$ [Nm]	a_{th}	S	Type	M_{2acc} [Nm]	M_{2accHT} [Nm]	M_{2NOT} [Nm]	i	i_{exakt}	n_{1maxDB} [rpm]	n_{1maxZB} [rpm]	J_1 [kgcm²]	$\Delta\varphi_2$ [arcmin]	$\Delta\varphi_{2red}$ [arcmin]	C_2 [Nm/ arcmin]	m [kg]
PHQ8 (n_{1N} = 4500 rpm, $M_{2acc,max}$ = 2800 Nm)																	
41	941	1515	0.5	1.6	PHQ833_1100 EZ505U	2800	3300	5090	110.0	110/1	3000	5000	13	3.0	1.0	712	46
41	1198	1980	0.6	1.2	PHQ833_1100 EZ703U	2800	3300	5090	110.0	110/1	3000	5000	23	3.0	1.0	712	48
51	752	1212	0.6	2.0	PHQ833_0880 EZ505U	2800	3300	5090	88.00	88/1	3000	5000	13	3.0	1.0	712	46
51	958	1584	0.7	1.6	PHQ833_0880 EZ703U	2800	3300	5090	88.00	88/1	3000	5000	23	3.0	1.0	712	48
82	537	1765	0.8	2.8	PHQ832_0550 EZ802U	2700	2990	5090	55.00	55/1	3000	6000	59	3.0	1.0	670	61
82	619	1023	0.9	2.4	PHQ832_0550 EZ703U	2700	2990	5090	55.00	55/1	3000	6000	22	3.0	1.0	670	47
82	839	1535	1.3	1.8	PHQ832_0550 EZ705U	2700	2990	5090	55.00	55/1	3000	6000	35	3.0	1.0	670	52
117	376	1235	1.0	4.0	PHQ832_0390 EZ802U	2800	3300	5090	38.50	77/2	3000	6000	59	3.0	1.0	701	61
117	433	716	1.1	3.4	PHQ832_0390 EZ703U	2330	2330	5090	38.50	77/2	3000	6000	23	3.0	1.0	701	47
117	587	1074	1.5	2.5	PHQ832_0390 EZ705U	2800	3300	5090	38.50	77/2	3000	6000	35	3.0	1.0	701	52
164	309	512	1.3	4.8	PHQ832_0280 EZ703U	1660	1660	5090	27.50	55/2	2700	5500	24	3.0	1.0	715	47
164	419	767	1.8	3.5	PHQ832_0280 EZ705U	2660	2660	5090	27.50	55/2	2700	5500	37	3.0	1.0	715	52
205	336	614	2.0	4.4	PHQ832_0220 EZ705U	2130	2130	4750	22.00	22/1	2500	4500	38	3.0	1.0	720	52
PHQ8 (n_{1N} = 6000 rpm, $M_{2acc,max}$ = 2800 Nm)																	
16	1178	1525	0.1	1.1	PHQ833_3850 EZ501U	2800	3300	5090	385.0	385/1	3700	6500	3.0	3.0	1.0	699	40
22	842	1089	0.1	1.6	PHQ833_2750 EZ501U	2800	3300	5090	275.0	275/1	3700	6500	3.1	3.0	1.0	707	40
22	1287	1931	0.2	1.0	PHQ833_2750 EZ502U	2800	3300	5090	275.0	275/1	3700	6500	5.4	3.0	1.0	707	41
22	1287	1955	0.2	1.0	PHQ833_2750 EZ701U	2800	3300	5090	275.0	275/1	3700	6500	8.7	3.0	1.0	707	43
27	673	871	0.1	2.0	PHQ833_2200 EZ501U	2800	3170	5090	220.0	220/1	3700	6500	3.1	3.0	1.0	705	40
27	1030	1544	0.2	1.3	PHQ833_2200 EZ502U	2800	3300	5090	220.0	220/1	3700	6500	5.4	3.0	1.0	705	41
27	1030	1564	0.2	1.3	PHQ833_2200 EZ701U	2800	3300	5090	220.0	220/1	3700	6500	8.7	3.0	1.0	705	43
27	1228	2099	0.3	1.1	PHQ833_2200 EZ503U	2800	3300	5090	220.0	220/1	3700	6500	7.8	3.0	1.0	705	43
31	589	762	0.1	2.3	PHQ833_1930 EZ501U	2770	2770	5090	192.5	385/2	3700	6500	3.3	3.0	1.0	710	40
31	901	1351	0.2	1.5	PHQ833_1930 EZ502U	2800	3300	5090	192.5	385/2	3700	6500	5.6	3.0	1.0	710	41
31	901	1369	0.2	1.5	PHQ833_1930 EZ701U	2800	3300	5090	192.5	385/2	3700	6500	8.9	3.0	1.0	710	43
31	1074	1836	0.3	1.3	PHQ833_1930 EZ503U	2800	3300	5090	192.5	385/2	3700	6500	8.0	3.0	1.0	710	43
39	471	610	0.2	2.9	PHQ833_1540 EZ501U	2220	2220	5090	154.0	154/1	3700	6500	3.3	3.0	1.0	710	40
39	721	1081	0.3	1.9	PHQ833_1540 EZ502U	2800	3300	5090	154.0	154/1	3700	6500	5.6	3.0	1.0	710	41
39	721	1095	0.3	1.9	PHQ833_1540 EZ701U	2770	2770	5090	154.0	154/1	3700	6500	8.9	3.0	1.0	710	43
39	859	1469	0.3	1.6	PHQ833_1540 EZ503U	2800	3300	5090	154.0	154/1	3700	6500	8.0	3.0	1.0	710	43
39	998	1982	0.4	1.4	PHQ833_1540 EZ702U	2800	3300	5090	154.0	154/1	3700	6500	14	3.0	1.0	710	46
44	421	545	0.2	3.2	PHQ833_1380 EZ501U	1980	1980	5090	137.5	275/2	3500	6000	3.6	3.0	1.0	711	40
44	644	965	0.3	2.1	PHQ833_1380 EZ502U	2800	3300	5090	137.5	275/2	3500	6000	5.9	3.0	1.0	711	41
44	644	978	0.3	2.1	PHQ833_1380 EZ701U	2480	2480	5090	137.5	275/2	3500	6000	9.2	3.0	1.0	711	43
44	767	1312	0.3	1.8	PHQ833_1380 EZ503U	2800	3300	5090	137.5	275/2	3500	6000	8.3	3.0	1.0	711	43
44	891	1770	0.4	1.5	PHQ833_1380 EZ702U	2800	3300	5090	137.5	275/2	3500	6000	14	3.0	1.0	711	46
109	368	731	0.6	3.7	PHQ832_0550 EZ702U	2100	2100	5090	55.00	55/1	3000	6000	14	3.0	1.0	670	45
PHQ9 (n_{1N} = 2000 rpm, $M_{2acc,max}$ = 6000 Nm)																	
28	2832	4283	1.2	1.3	PHQ933_0720 EZ805U	6000	–	12000	72.00	72/1	2200	4500	139	3.0	–	1205	127
33	2438	3688	1.4	1.6	PHQ932_0600 EZ805U	6000	–	12000	60.00	60/1	2800	4500	135	3.0	–	1149	119
48	1707	2582	1.6	2.2	PHQ932_0420 EZ805U	6000	–	12000	42.00	42/1	2800	4500	138	3.0	–	1195	119
67	1219	1844	1.9	3.1	PHQ932_0300 EZ805U	5720	–	12000	30.00	30/1	2500	4000	143	3.0	–	1214	119
83	975	1475	2.1	3.9	PHQ932_0240 EZ805U	4580	–	12000	24.00	24/1	2200	3500	150	3.0	–	1225	119
PHQ9 (n_{1N} = 3000 rpm, $M_{2acc,max}$ = 6000 Nm)																	
7.1	2797	3137	0.1	1.4	PHQ933_4200 EZ701U	6000	–	12000	420.0	420/1	3300	6000	9.1	3.0	–	1184	90
10	1998	2241	0.1	1.9	PHQ933_3000 EZ701U	5400	–	12000	300.0	300/1	3300	6000	9.1	3.0	–	1196	90
10	3240	3888	0.2	1.2	PHQ933_3000 EZ702U	6000	–	12000	300.0	300/1	3300	6000	14	3.0	–	1196	92
13	1598	1793	0.1	2.4	PHQ933_2400 EZ701U	4320	–	12000	240.0	240/1	3300	6000	9.2	3.0	–	1198	90
13	2592	3110	0.2	1.5	PHQ933_2400 EZ702U	6000	–	12000	240.0	240/1	3300	6000	14	3.0	–	1198	92
13	3564	4493	0.2	1.1	PHQ933_2400 EZ703U	6000	–	12000	240.0	240/1	3300	6000	22	3.0	–	1198	94
14	1399	1569	0.1	2.7	PHQ933_2100 EZ701U	3780	–	12000	210.0	210/1	3300	6000	9.8	3.0	–	1200	90
14	2268	2722	0.2	1.7	PHQ933_2100 EZ702U	6000	–	12000	210.0	210/1	3300	6000	15	3.0	–	1200	92
14	3119	3931	0.3	1.2	PHQ933_2100 EZ703U	6000	–	12000	210.0	210/1	3300	6000	23	3.0	–	1200	94
18	1119	1255	0.1	3.4	PHQ933_1680 EZ701U	3020	–	12000	168.0	168/1	3300	6000	9.9	3.0	–	1204	90
18	1814	2177	0.2	2.1	PHQ933_1680 EZ702U	6000	–	12000	168.0	168/1	3300	6000	15	3.0	–	1204	92
18	2495	3145	0.3	1.5	PHQ933_1680 EZ703U	6000	–	12000	168.0	168/1	3300	6000	23	3.0	–	1204	94
18	3221	4566	0.4	1.2	PHQ933_1680 EZ705U	6000	–	12000	168.0	168/1	3300	6000	35	3.0	–	1204	100
20	999	1121	0.1	3.8	PHQ933_1500 EZ701U	2700	–	12000	150.0	150/1	3000	5500	11	3.0	–	1202	90
20	1620	1944	0.2	2.3	PHQ933_1500 EZ702U	5540	–	12000	150.0	150/1	3000	5500	16	3.0	–	1202	92
20	2228	2808	0.3	1.7	PHQ933_1500 EZ703U	6000	–	12000	150.0	150/1	3000	5500	24	3.0	–	1202	94
20	2876	4077	0.4	1.3	PHQ933_1500 EZ705U	6000	–	12000	150.0	150/1	3000	5500	37	3.0	–	1202	100
25	799	896	0.2	4.8	PHQ933_1200 EZ701U	2160	–	12000	120.0	120/1	2500	4500	13	3.0	–	1203	90
25	1296	1555	0.3	2.9	PHQ933_1200 EZ702U	4430	–	12000	120.0	120/1	2500	4500	18	3.0	–	1203	92
25	1782	2246	0.4	2.1	PHQ933_1200 EZ703U	6000	–	12000	120.0	120/1	2500	4500	26	3.0	–	1203	94
25	2300	3262	0.5	1.7	PHQ933_1200 EZ705U	6000	–	12000	120.0	120/1	2500	4500	38	3.0	–	1203	100

n_{2N} [rpm]	M_{2N} [Nm]	$M_{2,0}$ [Nm]	a_{th}	S	Type	M_{2acc} [Nm]	M_{2accHT} [Nm]	M_{2NOT} [Nm]	i	i_{exakt}	n_{1maxDB} [rpm]	n_{1maxZB} [rpm]	J_1 [kgcm²]	$\Delta\varphi_2$ [arcmin]	$\Delta\varphi_{2red}$ [arcmin]	C_2 [Nm/ arcmin]	m [kg]
PHQ9 (n_{1N} = 3000 rpm, $M_{2acc,max}$ = 6000 Nm)																	
25	2408	4007	0.5	1.6	PHQ933_1200 EZ802U	6000	–	12000	120.0	120/1	2500	4500	62	3.0	–	1203	108
31	1037	1244	0.3	3.7	PHQ933_0960 EZ702U	3540	–	12000	96.00	96/1	2500	4500	18	3.0	–	1207	92
31	1426	1797	0.4	2.7	PHQ933_0960 EZ703U	5620	–	12000	96.00	96/1	2500	4500	26	3.0	–	1207	94
31	1840	2609	0.5	2.1	PHQ933_0960 EZ705U	6000	–	12000	96.00	96/1	2500	4500	39	3.0	–	1207	100
31	1927	3205	0.5	2.0	PHQ933_0960 EZ802U	6000	–	12000	96.00	96/1	2500	4500	63	3.0	–	1207	108
31	2298	4164	0.6	1.7	PHQ933_0960 EZ803U	6000	–	12000	96.00	96/1	2500	4500	88	3.0	–	1207	114
42	778	933	0.3	4.9	PHQ933_0720 EZ702U	2660	–	12000	72.00	72/1	2200	4500	20	3.0	–	1205	92
42	1069	1348	0.5	3.6	PHQ933_0720 EZ703U	4210	–	12000	72.00	72/1	2200	4500	28	3.0	–	1205	94
42	1380	1957	0.6	2.8	PHQ933_0720 EZ705U	6000	–	12000	72.00	72/1	2200	4500	41	3.0	–	1205	100
42	1445	2404	0.6	2.6	PHQ933_0720 EZ802U	6000	–	12000	72.00	72/1	2200	4500	65	3.0	–	1205	108
42	1724	3123	0.7	2.2	PHQ933_0720 EZ803U	6000	–	12000	72.00	72/1	2200	4500	90	3.0	–	1205	114
50	1244	2070	0.7	2.8	PHQ932_0600 EZ802U	5580	–	12000	60.00	60/1	2800	4500	61	3.0	–	1149	100
50	1484	2690	0.9	2.4	PHQ932_0600 EZ803U	6000	–	12000	60.00	60/1	2800	4500	86	3.0	–	1149	106
71	871	1449	0.8	4.4	PHQ932_0420 EZ802U	3910	–	12000	42.00	42/1	2800	4500	63	3.0	–	1195	100
71	1039	1883	1.0	3.7	PHQ932_0420 EZ803U	5660	–	12000	42.00	42/1	2800	4500	89	3.0	–	1195	106
PHQ9 (n_{1N} = 4500 rpm, $M_{2acc,max}$ = 6000 Nm)																	
19	2614	4320	0.2	1.5	PHQ933_2400 EZ703U	6000	–	12000	240.0	240/1	3300	6000	22	3.0	–	1198	94
21	2287	3780	0.2	1.7	PHQ933_2100 EZ703U	6000	–	12000	210.0	210/1	3300	6000	23	3.0	–	1200	94
27	1830	3024	0.2	2.1	PHQ933_1680 EZ703U	6000	–	12000	168.0	168/1	3300	6000	23	3.0	–	1204	94
27	2480	4536	0.3	1.5	PHQ933_1680 EZ705U	6000	–	12000	168.0	168/1	3300	6000	35	3.0	–	1204	100
30	1634	2700	0.2	2.3	PHQ933_1500 EZ703U	6000	–	12000	150.0	150/1	3000	5500	24	3.0	–	1202	94
30	2214	4050	0.3	1.7	PHQ933_1500 EZ705U	6000	–	12000	150.0	150/1	3000	5500	37	3.0	–	1202	100
38	1134	3726	0.2	3.4	PHQ933_1200 EZ802U	6000	–	12000	120.0	120/1	2500	4500	62	3.0	–	1203	108
38	1307	2160	0.3	2.9	PHQ933_1200 EZ703U	6000	–	12000	120.0	120/1	2500	4500	26	3.0	–	1203	94
38	1771	3240	0.3	2.1	PHQ933_1200 EZ705U	6000	–	12000	120.0	120/1	2500	4500	38	3.0	–	1203	100
47	907	2981	0.2	4.2	PHQ933_0960 EZ802U	6000	–	12000	96.00	96/1	2500	4500	63	3.0	–	1207	108
47	1045	1728	0.3	3.6	PHQ933_0960 EZ703U	5620	–	12000	96.00	96/1	2500	4500	26	3.0	–	1207	94
47	1417	2592	0.4	2.7	PHQ933_0960 EZ705U	6000	–	12000	96.00	96/1	2500	4500	39	3.0	–	1207	100
63	784	1296	0.3	4.8	PHQ933_0720 EZ703U	4210	–	12000	72.00	72/1	2200	4500	28	3.0	–	1205	94
63	1063	1944	0.4	3.6	PHQ933_0720 EZ705U	6000	–	12000	72.00	72/1	2200	4500	41	3.0	–	1205	100
PHQ9 (n_{1N} = 6000 rpm, $M_{2acc,max}$ = 6000 Nm)																	
10	2808	4266	0.1	1.4	PHQ933_6000 EZ701U	6000	–	12000	600.0	600/1	3300	6000	9.1	3.0	–	1145	90
14	1966	2986	0.1	1.9	PHQ933_4200 EZ701U	6000	–	12000	420.0	420/1	3300	6000	9.1	3.0	–	1184	90
20	1404	2133	0.1	2.7	PHQ933_3000 EZ701U	5400	–	12000	300.0	300/1	3300	6000	9.1	3.0	–	1196	90
20	1944	3861	0.1	2.0	PHQ933_3000 EZ702U	6000	–	12000	300.0	300/1	3300	6000	14	3.0	–	1196	92
25	1123	1706	0.1	3.4	PHQ933_2400 EZ701U	4320	–	12000	240.0	240/1	3300	6000	9.2	3.0	–	1198	90
25	1555	3089	0.1	2.4	PHQ933_2400 EZ702U	6000	–	12000	240.0	240/1	3300	6000	14	3.0	–	1198	92
29	983	1493	0.1	3.9	PHQ933_2100 EZ701U	3780	–	12000	210.0	210/1	3300	6000	9.8	3.0	–	1200	90
29	1361	2703	0.1	2.8	PHQ933_2100 EZ702U	6000	–	12000	210.0	210/1	3300	6000	15	3.0	–	1200	92
36	786	1194	0.1	4.8	PHQ933_1680 EZ701U	3020	–	12000	168.0	168/1	3300	6000	9.9	3.0	–	1204	90
36	1089	2162	0.1	3.5	PHQ933_1680 EZ702U	6000	–	12000	168.0	168/1	3300	6000	15	3.0	–	1204	92
PHQ10 (n_{1N} = 2000 rpm, $M_{2acc,max}$ = 10000 Nm)																	
17	4720	7139	0.6	1.4	PHQ1033_1200 EZ805U	10000	–	20000	120.0	120/1	2200	3500	150	3.0	–	2062	166
21	3776	5711	0.6	1.7	PHQ1033_0960 EZ805U	10000	–	20000	96.00	96/1	2200	3500	152	3.0	–	2068	166
PHQ10 (n_{1N} = 3000 rpm, $M_{2acc,max}$ = 10000 Nm)																	
14	4215	7012	0.2	1.5	PHQ1033_2100 EZ802U	10000	–	20000	210.0	210/1	2800	4500	63	3.0	–	2059	147
18	3372	5610	0.3	1.9	PHQ1033_1680 EZ802U	10000	–	20000	168.0	168/1	2800	4500	64	3.0	–	2064	147
18	4022	7288	0.3	1.6	PHQ1033_1680 EZ803U	10000	–	20000	168.0	168/1	2800	4500	89	3.0	–	2064	153
20	3011	5009	0.3	2.2	PHQ1033_1500 EZ802U	10000	–	20000	150.0	150/1	2500	4000	69	3.0	–	2061	147
20	3591	6507	0.3	1.8	PHQ1033_1500 EZ803U	10000	–	20000	150.0	150/1	2500	4000	94	3.0	–	2061	153
25	2408	4007	0.3	2.7	PHQ1033_1200 EZ802U	10000	–	20000	120.0	120/1	2200	3500	76	3.0	–	2062	147
25	2873	5206	0.4	2.3	PHQ1033_1200 EZ803U	10000	–	20000	120.0	120/1	2200	3500	101	3.0	–	2062	153
31	1927	3205	0.3	3.4	PHQ1033_0960 EZ802U	8640	–	20000	96.00	96/1	2200	3500	77	3.0	–	2068	147
31	2298	4164	0.4	2.8	PHQ1033_0960 EZ803U	10000	–	20000	96.00	96/1	2200	3500	102	3.0	–	2068	153
PHQ10 (n_{1N} = 4500 rpm, $M_{2acc,max}$ = 10000 Nm)																	
19	2268	7452	0.1	2.9	PHQ1033_2400 EZ802U	10000	–	20000	240.0	240/1	2800	4500	61	3.0	–	2055	147
21	1985	6521	0.1	3.3	PHQ1033_2100 EZ802U	10000	–	20000	210.0	210/1	2800	4500	63	3.0	–	2059	147
27	1588	5216	0.1	4.1	PHQ1033_1680 EZ802U	10000	–	20000	168.0	168/1	2800	4500	64	3.0	–	2064	147
PHQ11 (n_{1N} = 2000 rpm, $M_{2acc,max}$ = 22000 Nm)																	
8.3	9439	14278	0.2	1.4	PHQ1133_2400 EZ805U	22000	–	40000	240.0	240/1	2800	4500	136	3.0	–	3497	276
9.5	8259	12493	0.2	1.6	PHQ1133_2100 EZ805U	22000	–	40000	210.0	210/1	2800	4500	139	3.0	–	3506	276
12	6607	9994	0.3	2.0	PHQ1133_1680 EZ805U	22000	–	40000	168.0	168/1	2800	4500	140	3.0	–	3520	276
13	5900	8924	0.3	2.2	PHQ1133_1500 EZ805U	22000	–	40000	150.0	150/1	2500	4000	145	3.0	–	3510	276

n_{2N} [rpm]	M_{2N} [Nm]	$M_{2,0}$ [Nm]	a_{th}	S	Type	M_{2acc} [Nm]	M_{2accHT} [Nm]	M_{2NOT} [Nm]	i	i_{exakt}	n_{1maxDB} [rpm]	n_{1maxZB} [rpm]	J_1 [kgcm²]	$\Delta\varphi_2$ [arcmin]	$\Delta\varphi_{2red}$ [arcmin]	C_2 [Nm/ arcmin]	m [kg]
PHQ11 (n_{1N} = 2000 rpm, $M_{2acc,max}$ = 22000 Nm)																	
17	4720	7139	0.3	2.8	PHQ1133_1200 EZ805U	22000	–	40000	120.0	120/1	2200	3500	153	3.0	–	3514	276
21	3776	5711	0.3	3.4	PHQ1133_0960 EZ805U	17710	–	40000	96.00	96/1	2200	3500	156	3.0	–	3533	276
PHQ11 (n_{1N} = 3000 rpm, $M_{2acc,max}$ = 22000 Nm)																	
10	6021	10017	0.1	2.2	PHQ1133_3000 EZ802U	22000	–	40000	300.0	300/1	2800	4500	61	3.0	–	3491	257
10	7182	13014	0.1	1.8	PHQ1133_3000 EZ803U	22000	–	40000	300.0	300/1	2800	4500	87	3.0	–	3491	263
13	4817	8014	0.1	2.7	PHQ1133_2400 EZ802U	21600	–	40000	240.0	240/1	2800	4500	62	3.0	–	3497	257
13	5746	10411	0.1	2.3	PHQ1133_2400 EZ803U	22000	–	40000	240.0	240/1	2800	4500	87	3.0	–	3497	263
14	4215	7012	0.1	3.1	PHQ1133_2100 EZ802U	18900	–	40000	210.0	210/1	2800	4500	64	3.0	–	3506	257
14	5027	9110	0.1	2.6	PHQ1133_2100 EZ803U	22000	–	40000	210.0	210/1	2800	4500	90	3.0	–	3506	263
18	3372	5610	0.1	3.9	PHQ1133_1680 EZ802U	15120	–	40000	168.0	168/1	2800	4500	65	3.0	–	3520	257
18	4022	7288	0.2	3.2	PHQ1133_1680 EZ803U	21920	–	40000	168.0	168/1	2800	4500	91	3.0	–	3520	263
20	3011	5009	0.1	4.3	PHQ1133_1500 EZ802U	13500	–	40000	150.0	150/1	2500	4000	71	3.0	–	3510	257
20	3591	6507	0.2	3.6	PHQ1133_1500 EZ803U	19580	–	40000	150.0	150/1	2500	4000	96	3.0	–	3510	263
25	2873	5206	0.2	4.5	PHQ1133_1200 EZ803U	15660	–	40000	120.0	120/1	2200	3500	104	3.0	–	3514	263
PHQ11 (n_{1N} = 4500 rpm, $M_{2acc,max}$ = 22000 Nm)																	
15	2835	9315	–	4.6	PHQ1133_3000 EZ802U	22000	–	40000	300.0	300/1	2800	4500	61	3.0	–	3491	257

4.3 Dimensional drawings

In this chapter you can find the dimensions of the geared motors.

There is a dimensional drawing for every possible shaft/housing design, each with the tables for gear unit dimensions, motor dimensions and geared motor dimensions.

Dimensions can exceed the specifications of ISO 2768-mK due to casting tolerances or accumulation of individual tolerances.

We reserve the right to make dimensional changes due to ongoing technical development.

You can download 3D models of our standard drives at http://configurator.stoeber.de.

Combination options and the dimensions of forced ventilated geared motors can also be found at http://configurator.stoeber.de.

4.3.1 PHQ4 – PHQ10 F shaft design (flange shaft)

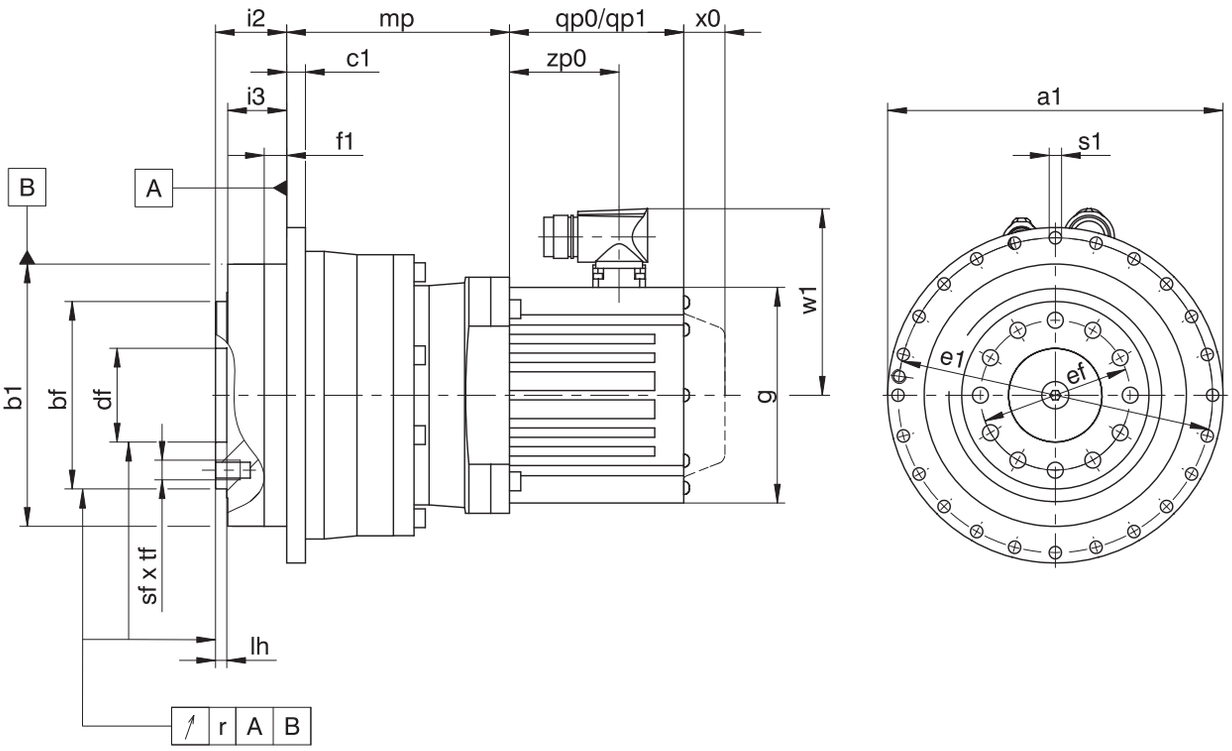

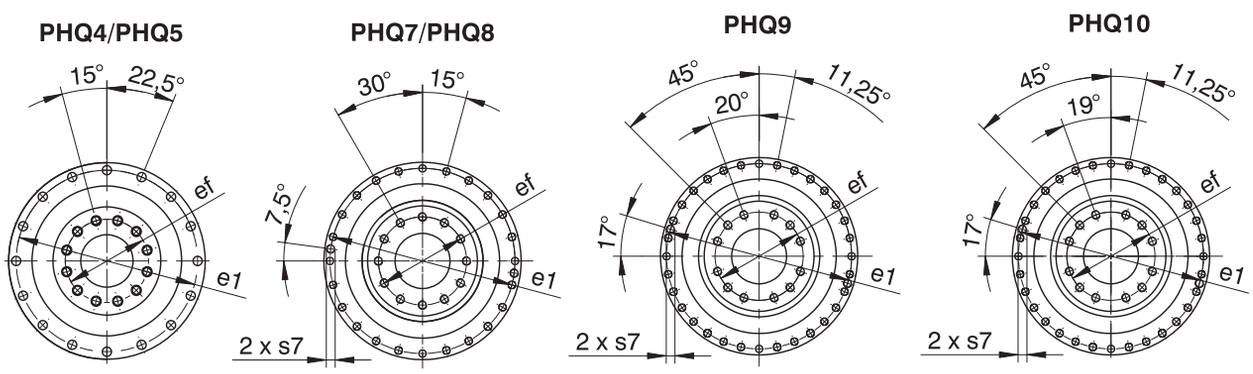

qp0	Applies to motors without brake.	qp1	Applies to motors with brake.
x0	Applies to encoders using an optical measuring method.	w1	Different for the One Cable Solution (OCS), see the chapter [▸ 17.4]

Dimensions of gear units

Type	Øa1	Øb1	Øbf	c1	Ødf	Øe1	Øef	f1	i2	i3	lh	r	Øs1	s7	sf	tf
PHQ431	118_{h7}	90_{h7}	63_{h7}	7	31.5^{H6}	109	50	10	30	24	6	0.020	5.5	–	M6	11.0
PHQ432	118_{h7}	90_{h7}	63_{h7}	7	31.5^{H6}	109	50	10	30	24	6	0.020	5.5	–	M6	11.0
PHQ531	145_{h7}	110_{h7}	80_{h7}	8	40.0^{H6}	135	63	10	29	23	6	0.020	5.5	–	M8	11.0
PHQ532	145_{h7}	110_{h7}	80_{h7}	8	40.0^{H6}	135	63	10	29	23	6	0.020	5.5	–	M8	11.0
PHQ731	179_{h7}	140_{h7}	100_{h7}	10	50.0^{H6}	168	80	12	38	32	6	0.025	6.6	–	M10	16.0
PHQ732	179_{h7}	140_{h7}	100_{h7}	10	50.0^{H6}	168	80	12	38	32	6	0.025	6.6	–	M10	16.0
PHQ733	179_{h7}	140_{h7}	100_{h7}	10	50.0^{H6}	168	80	12	38	32	6	0.025	6.6	–	M10	16.0
PHQ832	247_{h7}	200_{h7}	160_{h7}	12	80.0^{H6}	233	125	15	50	42	8	0.030	9.0	M10	M12	17.0
PHQ833	247_{h7}	200_{h7}	160_{h7}	12	80.0^{H6}	233	125	15	50	42	8	0.030	9.0	M10	M12	17.0
PHQ932	300_{h7}	255_{h7}	180_{h7}	18	90.0^{H6}	280	145	20	66	55	12	0.030	13.5	M8	M20	28.0
PHQ933	300_{h7}	255_{h7}	180_{h7}	18	90.0^{H6}	280	145	20	66	55	12	0.030	13.5	M8	M20	28.0
PHQ1033	330_{h7}	285_{h7}	200_{h7}	20	95.0^{H6}	310	166	20	75	60	10	0.040	13.5	M10	M24	35.0

Dimensions of motors

Type	□g	qp0	qp1	w1	x0	zp0
EZ301U	72	90	130.0	55.5	21	54.5
EZ302U	72	112	152.0	55.5	21	76.5
EZ303U	72	134	174.0	55.5	21	98.5
EZ401U	98	98	146.5	91.0	22	56.0
EZ402U	98	123	171.5	91.0	22	81.0
EZ404U	98	173	221.5	91.0	22	131.0
EZ501U	115	93	147.5	100.0	22	58.5
EZ502U	115	118	172.5	100.0	22	83.5
EZ503U	115	143	197.5	100.0	22	108.5
EZ505U	115	193	247.5	100.0	22	158.5
EZ701U	145	102	161.0	115.0	22	64.0
EZ702U	145	127	186.0	115.0	22	89.0
EZ703U	145	152	211.0	115.0	22	114.0
EZ705U	145	207	266.0	134.0	22	165.0
EZ802U	190	197	274.0	156.5	22	143.0
EZ803U	190	238	315.0	156.5	22	184.0
EZ805U	190	320	397.0	156.5	22	266.0

Dimensions of geared motors

Type	EZ3	EZ4	EZ5	EZ7	EZ8
	mp	mp	mp	mp	mp
PHQ431	–	54.5	54.0	–	–
PHQ432	99.0	95.5	–	–	–
PHQ531	–	–	–	64.0	–
PHQ532	–	103.0	102.5	–	–
PHQ731	–	–	–	–	77.0
PHQ732	–	–	119.0	122.0	–
PHQ733	–	161.0	160.5	–	–
PHQ832	–	–	–	161.0	171.0
PHQ833	–	–	207.0	210.0	–
PHQ932	–	–	–	–	249.5
PHQ933	–	–	–	319.0	334.0
PHQ1033	–	–	–	–	394.0

4.3.2 PHQ11 F shaft design (flange shaft)

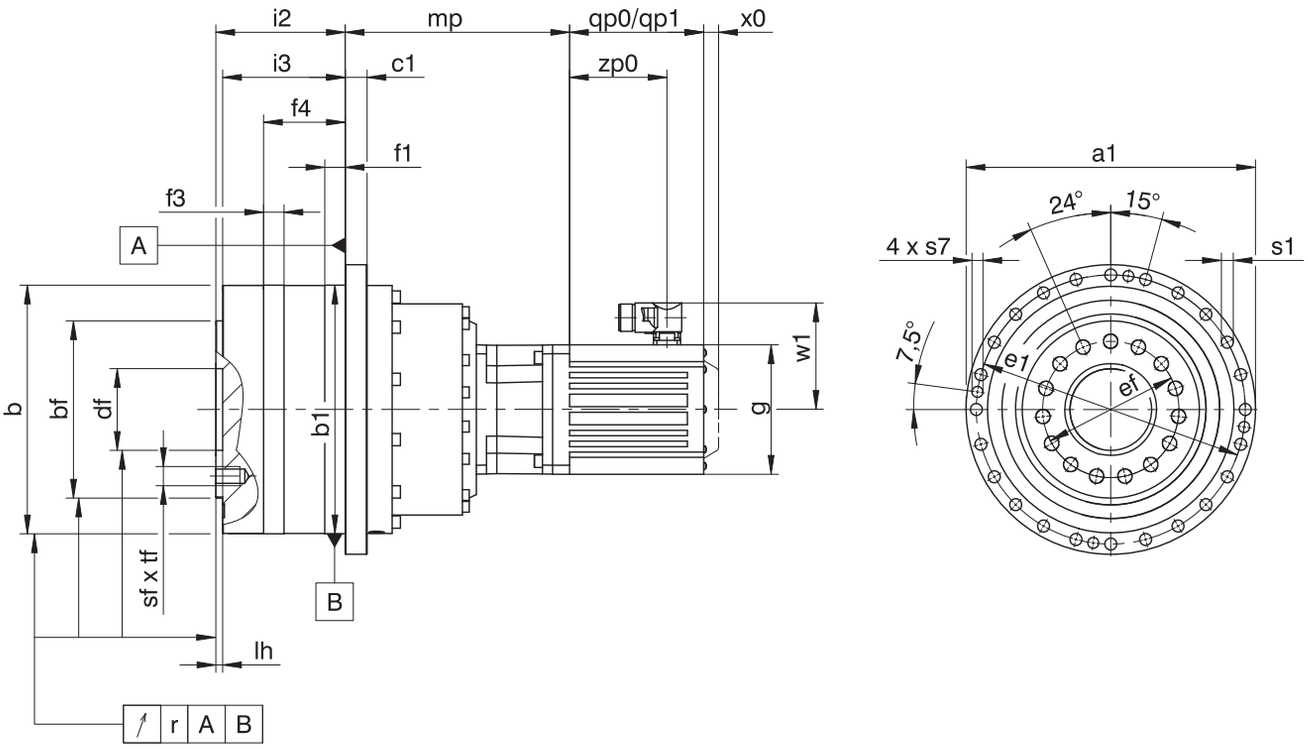

qp0	Applies to motors without brake.	qp1	Applies to motors with brake.
x0	Applies to encoders using an optical measuring method.	w1	Different for the One Cable Solution (OCS), see the chapter [▸ 17.4]

Dimensions of gear units

Type	Øa1	Øb	Øb1	Øbf	c1	Ødf	Øe1	Øef	f1	f3	f4	i2	i3	lh	r	Øs1	s7	sf	tf
PHQ1133	425	365_{g6}	365_{h6}	260_{h7}	32	120.0^{H6}	395	200	30	30	120	190	180	10	0.040	17.5	M16	M24	35.5

Dimensions of motors

Type	□g	qp0	qp1	w1	x0	zp0
EZ802U	190	197	274.0	156.5	22	143.0
EZ803U	190	238	315.0	156.5	22	184.0
EZ805U	190	320	397.0	156.5	22	266.0

Dimensions of geared motors

Type	EZ8
	mp
PHQ1133	329.5

4.4 Type designation

4.4.1 Type designation PHQ4 – PHQ8

In this chapter, you can find an explanation of the type designation for sizes PHQ4 – PHQ8 with the associated options.

Additional ordering information not included in the type designation can be found at the end of the chapter.

Example code

PHQ	**7**	**3**	**3**	**S**	**F**	**S**	**S**	**0880**	**EZ401U**

Explanation

Code	Designation	Design
PHQ	Type	Planetary gear unit
7	Size	7 (example)
3	Generation	Generation 3
1 2 **3**	Stages	Single-stage Two-stage Three-stage
S	Housing	Standard
F	Shaft	Flange shaft
S V	Bearing	Standard bearing Reinforced bearing (PHQ4 – PHQ5)
S R	Backlash	Standard Reduced
0880	Transmission ratio (i x 10)	i = 88 (example)
EZ401U	Motor	EZ synchronous servo motor

To complete the type designation, also specify the following in your order:

- For a detailed type designation of the motor, see the chapter [▸ 17]
- Mounting position (for three-stage gear units), see the chapter [▸ 4.5.3]
- Radial shaft seal rings at the output made of NBR or FKM (option), see the chapter [▸ 4.6.3]
- Reverse operation of the output shaft from ±20° to ±90° and horizontal installation, note the chapter [▸ 4.6.4]

4.4.2 Type designation PHQ9 – PHQ11

In this chapter, you can find an explanation of the type designation for sizes PHQ9 – PHQ11 with the associated options.

Additional ordering information not included in the type designation can be found at the end of the chapter.

Example code

PHQ	9	3	2	F	0420	EZ802U

Explanation

Code	Designation	Design
PHQ	Type	Planetary gear unit
9	Size	9 (example)
3	Generation	Generation 3
2	Stages	Two-stage
3		Three-stage
F	Shaft	Flange shaft
0420	Transmission ratio (i x 10)	i = 42 (example)
EZ802U	Motor	EZ synchronous servo motor

To complete the type designation, also specify the following in your order:

- For a detailed type designation of the motor, see the chapter [▸ 17]
- Mounting position (for three-stage gear units), see the chapter [▸ 4.5.3]
- Radial shaft seal rings at the output made of NBR or FKM (option), see the chapter [▸ 4.6.3]
- Reverse operation of the output shaft from ±20° to ±90° and horizontal installation, note the chapter [▸ 4.6.4]

4.4.3 Nameplate

An example geared motor nameplate is explained in the figure below.

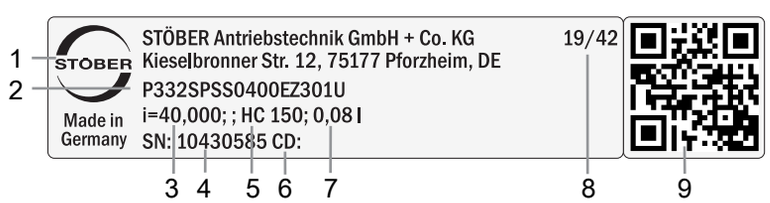

Code	Designation
1	Name of manufacturer
2	Type designation
3	Gear ratio of the gear unit
4	Serial number of the gear unit
5	Lubricant specification
6	Customer-specific data
7	Lubricant fill volume
8	Date of manufacture (year/calendar week)
9	QR code (link to product information)

4.4.3.1 Supporting documents

You can view or download supporting documents for the product by reading off the serial number on the nameplate of the product and entering it at the following address online:
https://id.stober.com

Alternatively, you can use a suitable mobile device to scan in the QR code on the nameplate of the product in order to be linked to the supporting documents.

4.5 Product description

4.5.1 Input options

EZ synchronous servo motor

http://www.stoeber.de/en/PHQEZ

4.5.2 Installation conditions

The torque and force values listed in this catalog are valid under the following conditions:

- When the flange shaft and gear housing are fastened on the machine side using screws of strength class 12.9
- When the gear housings are adjusted at pilot øb1, and also at pilot Øb for size PHQ11. The machine-side fit must be H7.
- When the flange shaft is adjusted using the connecting element at pilot øbf or ødf

4.5.3 Mounting positions

The following table shows the standard mounting positions.

Please indicate the mounting position when ordering three-stage geared motors.

EL1	EL5	EL6
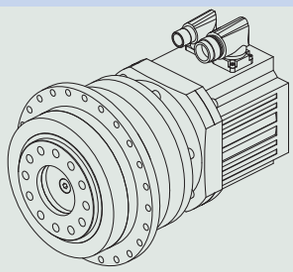	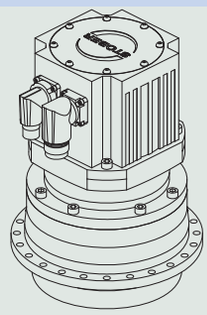	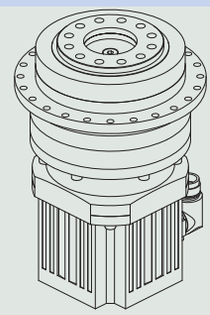
Horizontal output	Vertical downward output	Vertical upward output

4.5.4 Lubricants

STOBER fills the gear units with the amount and type of lubricant specified on the nameplate. The filling volume and the structure of the gear units depend on the mounting position.

Only install the gear units in the intended mounting position! Reposition the gear units only after consulting STOBER. Otherwise, STOBER assumes no liability for the gear units.

You will receive lubricants for use in the food industry upon request.

4.5.5 Other product features

Feature	Value
Max. permitted gear unit temperature (on the surface of the gear unit)	≤ 90 °C
Paint	Black RAL 9005
Explosion-proof design in accordance with (ATEX) Directive 2014/34/EU (optional)	Not available
Efficiency:	
η_{get} single-stage	96%
η_{get} two-stage	93%
η_{get} three-stage	90%
Protection class:[1]	
Gear unit	IP65
Motor	IP56, optionally IP66

4.5.6 Direction of rotation

The input and output rotate in the same direction.

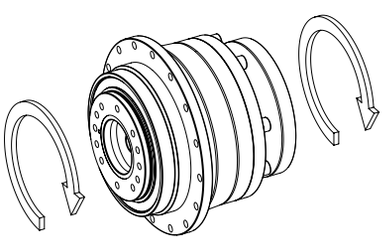

4.6 Project configuration

Project your drives using our SERVOsoft designing software. Download SERVOsoft for free at https://www.stoeber.de/en/ServoSoft.

Observe the limit conditions in this chapter to ensure a safe design for your drives.

An explanation of the formula symbols can be found in Chapter [▸ 23.1].

The formula symbols for values actually present in the application are marked with *.

4.6.1 Calculation of the operating point

Check the following conditions for operating points other than the nominal point M_{2N} specified in the selection tables.

$$n_{1m*} \leq \frac{n_{1maxDB}}{fB_T}$$

$$n_{1max*} \leq \frac{n_{1maxZB}}{fB_T}$$

$$M_{2eff*} \leq M_{2th}$$

$$M_{2acc*} \leq \frac{M_{2acc}}{fB_{ZB}}$$

$$M_{2NOT*} \leq M_{2NOT}$$

$$M_{2eq*} \leq M_{2N} \cdot \frac{S}{fB_{op} \cdot fB_t}$$

Refer to the selection tables for the values for n_{1maxDB}, n_{1maxZB}, M_{2acc} (M_{2accHT} for reduced backlash), M_{2NOT}, M_{2N} and S.

[1] Observe the protection class of all the components.

The values for fB_T, fB_{op}, fB_t and fB_{ZB} can be found in the corresponding tables in this chapter.

Calculate the thermal limit torque M_{2th} for a duty cycle > 50%.

Example of cyclic operation

The following calculations are based on a representation of the power taken from the output based in accordance with the following example:

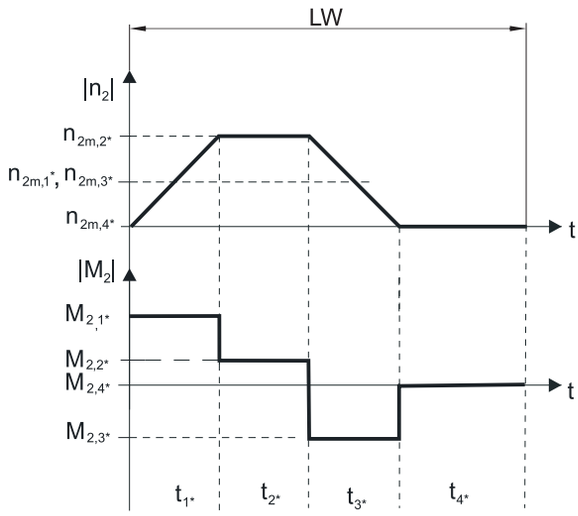

Calculation of the actual average input speed

$$n_{1m*} = n_{2m*} \cdot i$$

$$n_{2m*} = \frac{|n_{2m,1*}| \cdot t_{1*} + \ldots + |n_{2m,n*}| \cdot t_{n*}}{t_{1*} + \ldots + t_{n*}}$$

If $t_{1*} + \ldots + t_{3*} \geq 6$ min, calculate n_{2m*} without the rest phase t_{4*}.

The values for the ratio i can be found in the selection tables.

Calculation of the actual effective torque

$$M_{2eff*} = \sqrt{\frac{t_{1*} \cdot M_{2,1*}^{\ 2} + \ldots + t_{n*} \cdot M_{2,n*}^{\ 2}}{t_{1*} + \ldots + t_{n*}}}$$

Calculation of the actual equivalent torque

$$M_{2eq*} = \sqrt[3]{\frac{|n_{2m,1*}| \cdot t_{1*} \cdot |M_{2,1*}^{\ 3}| + \ldots + |n_{2m,n*}| \cdot t_{n*} \cdot |M_{2,n*}^{\ 3}|}{|n_{2m,1*}| \cdot t_{1*} + \ldots + |n_{2m,n*}| \cdot t_{n*}}}$$

Calculation of the thermal limit torque

Calculate the thermal limit torque M_{2th} for a duty cycle ED_{10} > 50% and the actual average input speed n_{1m*}. (At $K_{mot,th} \leq 0$ you must reduce the average input speed n_{1m*} accordingly or select another geared motor size.)

$$M_{2th} = M_{op} \cdot i \cdot K_{mot,th}$$

$$K_{mot,th} = 0{,}93 - \frac{a_{th}}{1000} \cdot fB_T \cdot \left(\frac{n_{1m*}}{1000}\right)^3$$

The values for i and a_{th} can be found in the selection tables.

The values for fB_T can be found in the corresponding table in this chapter.

The value for the torque of the motor at operating point M_{op} with the determined average input speed n_{1m*} can be found in the motor curve of Chapter [▸ 17.3]. Note the size, nominal speed n_N and cooling type of the motor. The figure below shows an example of reading the torque M_{op} of a motor with convection cooling at the operating point.

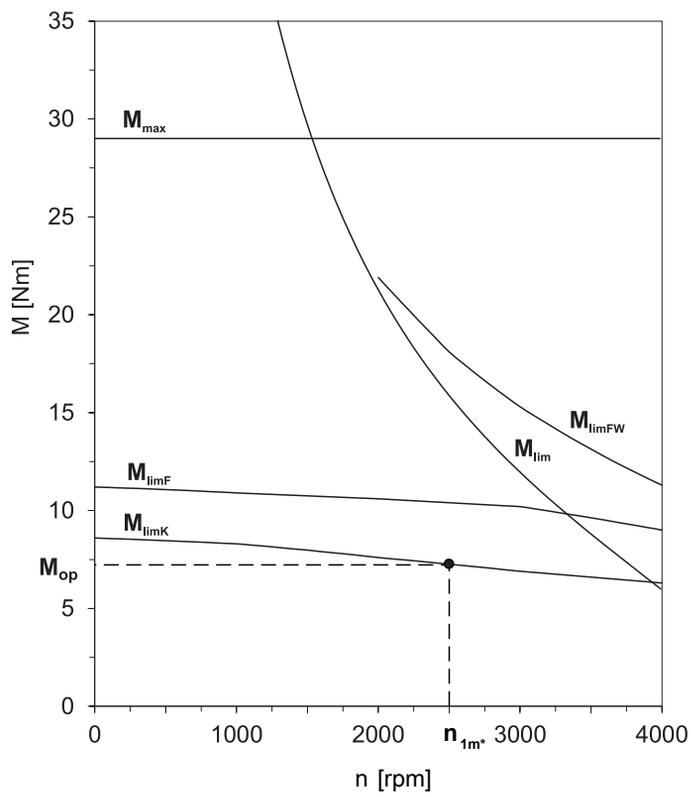

Operating factors

Operating mode	fB_{op}
Uniform continuous operation	1.00
Cyclic operation	1.00
Reversing load cyclic operation	1.00

Run time	fB_t
Daily runtime ≤ 8 h	1.00
Daily runtime ≤ 16 h	1.15
Daily runtime ≤ 24 h	1.20

Cyclic operation	fB_{ZB}
≤ 1000 load changes/hour (LW/h)	1.00
> 1000 load changes/hour (LW/h)	1.15

Temperature		fB_T
Motor cooling	**Surrounding temperature**	
Motor with forced ventilation	≤ 20 °C	0.9
	≤ 30 °C	1.0
	≤ 40 °C	1.15
Motor with convection cooling	≤ 20 °C	1.0
	≤ 30 °C	1.1
	≤ 40 °C	1.25

Notes

- The maximum permitted gear unit temperature (see the "Other product features" chapter) must not be exceeded. Doing so may result in damage to the geared motor.
- For braking from full speed (for example when the power fails or when setting up the machine), note the permitted gear unit torques (M_{2acc}, M_{2NOT}) in the selection tables.

4.6.2 Permitted shaft loads for the output shaft

The values specified in the tables apply to the permitted shaft loads:

- For shaft dimensions in accordance with the catalog
- For output speeds $n_{2m*} \leq 100$ rpm ($F^{2axN} = F_{2ax100}$; $F_{2radN} = F_{2rad100}$; $M_{2kN} = M_{2k100}$)
- Only if radial forces on the gear unit are stabilized by its pilots (housing, flange shaft)

Permitted shaft loads for standard bearing S

Type	z_2 [mm]	F_{2ax100} [N]	$F_{2rad100}$ [N]	$F_{2rad,acc}$ [N]	M_{2k100} [Nm]	$M_{2k,acc}$ [Nm]	C_{2k} [Nm/ arcmin]
PHQ4	83.0	2150	3095	3929	257	326	160
PHQ5	97.0	4150	4536	4897	440	475	380
PHQ7	86.0	6150	17045	17045	1466	1466	500
PHQ8	125.5	10050	27778	33333	3486	4183	1550
PHQ9	155.0	33000	48387	70968	7500	11000	7500
PHQ10	171.0	50000	51462	73099	8800	12500	9500
PHQ11	231.0	60000	47619	60606	11000	14000	11500
PHQ12	281.0	70000	53380	71040	15000	20000	14000

Permitted shaft loads for reinforced bearing V

Type	z_2 [mm]	F_{2ax100} [N]	$F_{2rad100}$ [N]	$F_{2rad,acc}$ [N]	M_{2k100} [Nm]	$M_{2k,acc}$ [Nm]	C_{2k} [Nm/ arcmin]
PHQ4	88.5	2900	4000	4000	354	354	160
PHQ5	104.0	5000	5500	5500	572	572	380

For other output speeds, download diagrams at http://configurator.stoeber.de.

The following applies to output speeds n_{2m*} > 100 rpm:

$$F_{2axN} = \frac{F_{2ax100}}{\sqrt[3]{\frac{n_{2m*}}{100\ \text{rpm}}}} \qquad F_{2radN} = \frac{F_{2rad100}}{\sqrt[3]{\frac{n_{2m*}}{100\ \text{rpm}}}} \qquad M_{2kN} = \frac{M_{2k100}}{\sqrt[3]{\frac{n_{2m*}}{100\ \text{rpm}}}}$$

The values for F_{2ax100}, $F_{2rad100}$ and M_{2k100} can be found in the table "Permitted shaft loads" in this chapter.

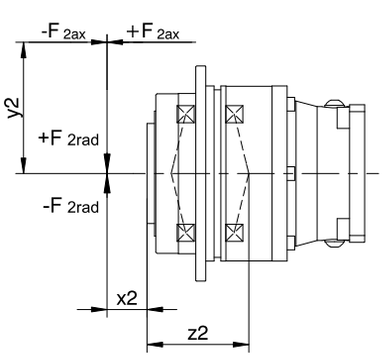

Fig. 1: Force application points

You can determine the permitted radial forces from the permitted breakdown torque M_{2kN} and $M_{2k,acc}$. The actual radial forces may not exceed the permitted radial forces. The permitted radial forces pertain to the shaft end (x2 = 0).

$$M_{2k,acc*} = \frac{2 \cdot F_{2ax*} \cdot y_2 + F_{2rad,acc*} \cdot (x_2 + z_2)}{1000} \leq M_{2k,acc}$$

For applications with multiple axial and/or radial forces, you must add the forces as vectors.

In the event of EMERGENCY OFF operation (max. 1000 load changes), you can multiply the permitted forces and torques for F_{2ax100}, $F_{2rad100}$ and M_{2k100} by a factor of two.

Also note the calculation for equivalent values:

$$M_{2k,eq^*} = \sqrt[3]{\frac{\left|n_{2m,1^*}\right| \cdot t_{1^*} \cdot \left|M_{2k,acc,1^*}{}^3\right| + \ldots + \left|n_{2m,n^*}\right| \cdot t_{n^*} \cdot \left|M_{2k,acc,n^*}{}^3\right|}{\left|n_{2m,1^*}\right| \cdot t_{1^*} + \ldots + \left|n_{2m,n^*}\right| \cdot t_{n^*}}} \leq M_{2kN}$$

$$F_{2rad,eq^*} = \sqrt[3]{\frac{\left|n_{2m,1^*}\right| \cdot t_{1^*} \cdot \left|F_{2rad,acc,1^*}{}^3\right| + \ldots + \left|n_{2m,n^*}\right| \cdot t_{n^*} \cdot \left|F_{2rad,acc,n^*}{}^3\right|}{\left|n_{2m,1^*}\right| \cdot t_{1^*} + \ldots + \left|n_{2m,n^*}\right| \cdot t_{n^*}}} \leq F_{2radN}$$

$$F_{2ax,eq^*} \leq F_{2axN}$$

The following apply to the bearing service life L_{10h} ($ED_{10} \leq 40\%$):

$L_{10h} > 10000$ h with $1 < M_{2kN}/M_{2k^*} < 1.25$

$L_{10h} > 20000$ h with $1.25 < M_{2kN}/M_{2k^*} < 1.5$

$L_{10h} > 30000$ h with $1.5 < M_{2kN}/M_{2k^*}$

For different duty cycles:

$$L_{10h} > L_{10h(ED_{10}=40\%)} \cdot \frac{40\%}{ED_{10}}$$

4.6.3 Recommendation for radial shaft seal rings

For a duty cycle > 60% and higher surrounding temperatures, we recommend radial shaft seal rings made of FKM at the output.

Properties:

- Excellent temperature resistance
- High chemical stability
- Very good resistance to aging
- Excellent resistance in oils and greases
- For use in the food, beverage and pharmaceutical industries

Leak-proofness

Our gear units are equipped with high-quality radial shaft seal rings and checked for leaks. However, a leak cannot be fully ruled out over the length of use of a gear unit. If you use a gear unit with goods incompatible with the lubricant, you must take measures to prevent direct contact with the gear unit lubricant in case of a leak.

4.6.4 Reverse operation

To ensure lubrication for circulating gearing parts during cyclic reverse operation from ± 20° to ± 90° at the output, pay careful attention to the position of the output shaft for the horizontal mounting of the gear unit, as shown in the diagrams below.

The images show the center position of reverse operation.

Cyclic reverse operation ≤ ± 20° on request.

PHQ4 – PHQ12

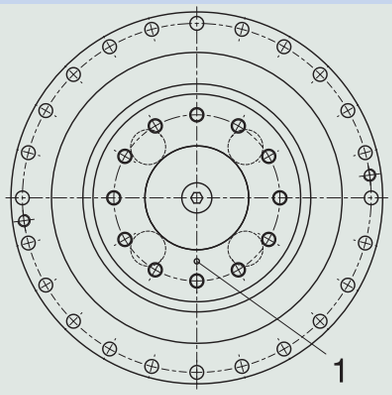

1 Position of the mark: bottom

Please note that the hole pattern may be different, depending on the size of the planetary gear unit.

4.7 Additional documentation

Additional documentation related to the product can be found at
http://www.stoeber.de/en/downloads/

Enter the ID of the documentation in the Search... field.

Documentation	ID
Operating manual for P/PE/PH/PHQ/PHV planetary gear units and planetary geared motors	443149_en

5 PHV planetary geared motors

Table of contents

5.1 Overview 92

5.2 Selection tables 93

5.3 Dimensional drawings 94

5.3.1 F shaft design (flange shaft) 94

5.4 Type designation 95

5.4.1 Nameplate 96

5.5 Product description 96

5.5.1 Input options 96

5.5.2 Installation conditions 96

5.5.3 Lubricants 96

5.5.4 Other product features 97

5.5.5 Direction of rotation 97

5.6 Project configuration 97

5.6.1 Calculation of the operating point 97

5.6.2 Permitted shaft loads for the output shaft 100

5.6.3 Recommendation for radial shaft seal rings 101

5.6.4 Reverse operation 101

5.7 Additional documentation 101

5 Planetary geared motors PHV

5.1 Overview

High-performance precision planetary geared motors

Features

Power density	★★★★☆
Backlash	★★★★☆
Price category	€€€
Shaft load	★★★★★
Smooth operation	★★★★☆
Torsional stiffness	★★★★☆
Mass moment of inertia	★★★★★
Helical gearing	✓
Maintenance-free	✓
Any mounting position	✓
Continuous operation without cooling	✓
Stiff output bearings due to pretension	✓
Compact and highly dynamic due to direct motor attachment	✓

Key ★☆☆☆☆ good | ★★★★★ excellent
€ Economy | €€€€€ Premium

Technical data

i	61 – 121
M_{2acc}	1638 – 7500 Nm
$\Delta\phi_2$	3 arcmin
η_{get}	90 %

5.2 Selection tables

The technical data specified in the selection tables applies to:

- Installation altitudes up to 1000 m above sea level
- Surrounding temperatures from 0 °C to 40 °C
- Drives with convection-cooled motors (e.g. EZ401**U**)

For the technical data on drives with forced ventilated motors (e.g. EZ401**B**), refer to http://configurator.stoeber.de.

An explanation of the formula symbols can be found in Chapter [▸ 23.1].

n_{2N} [rpm]	M_{2N} [Nm]	$M_{2,0}$ [Nm]	a_{th}	S	Type	M_{2acc} [Nm]	M_{2NOT} [Nm]	i	i_{exakt}	n_{1maxDB} [rpm]	n_{1maxZB} [rpm]	J_1 [kgcm²]	$\Delta\varphi_2$ [arcmin]	C_2 [Nm/ arcmin]	m [kg]
PHV9 (n_{1N} = 3000 rpm, $M_{2acc,max}$ = 4250 Nm)															
25	806	904	0.2	3.1	PHV933_1210 EZ701U	2180	9000	121.0	121/1	2500	4500	9.8	3.0	805	67
25	1307	1568	0.4	1.9	PHV933_1210 EZ702U	4250	9000	121.0	121/1	2500	4500	15	3.0	805	70
25	1797	2265	0.5	1.4	PHV933_1210 EZ703U	4250	9000	121.0	121/1	2500	4500	23	3.0	805	72
33	606	680	0.3	4.1	PHV933_0910 EZ701U	1640	9000	91.00	91/1	2500	4500	11	3.0	838	67
33	983	1179	0.4	2.5	PHV933_0910 EZ702U	3360	9000	91.00	91/1	2500	4500	16	3.0	838	70
33	1351	1704	0.6	1.9	PHV933_0910 EZ703U	4250	9000	91.00	91/1	2500	4500	24	3.0	838	72
33	1744	2473	0.8	1.4	PHV933_0910 EZ705U	4250	9000	91.00	91/1	2500	4500	36	3.0	838	77
33	1826	3038	0.8	1.4	PHV933_0910 EZ802U	4250	9000	91.00	91/1	2500	4500	60	3.0	838	86
49	1224	2037	1.0	2.0	PHV933_0610 EZ802U	4250	9000	61.00	61/1	2500	4500	64	3.0	850	86
49	1460	2646	1.2	1.7	PHV933_0610 EZ803U	4250	9000	61.00	61/1	2500	4500	89	3.0	850	92
PHV9 (n_{1N} = 4500 rpm, $M_{2acc,max}$ = 4250 Nm)															
37	1318	2178	0.4	1.7	PHV933_1210 EZ703U	4250	9000	121.0	121/1	2500	4500	23	3.0	805	72
37	1786	3267	0.6	1.3	PHV933_1210 EZ705U	4250	9000	121.0	121/1	2500	4500	35	3.0	805	77
49	860	2826	0.4	2.7	PHV933_0910 EZ802U	4250	9000	91.00	91/1	2500	4500	60	3.0	838	86
49	991	1638	0.5	2.3	PHV933_0910 EZ703U	4250	9000	91.00	91/1	2500	4500	24	3.0	838	72
49	1343	2457	0.7	1.7	PHV933_0910 EZ705U	4250	9000	91.00	91/1	2500	4500	36	3.0	838	77
74	576	1894	0.5	4.0	PHV933_0610 EZ802U	4250	9000	61.00	61/1	2500	4500	64	3.0	850	86
PHV10 (n_{1N} = 2000 rpm, $M_{2acc,max}$ = 7500 Nm)															
22	3579	5414	1.1	1.1	PHV1033_0910 EZ805U	7500	15000	91.00	91/1	2500	4500	137	3.0	1342	128
33	2399	3629	1.3	1.7	PHV1033_0610 EZ805U	7500	15000	61.00	61/1	2500	4500	140	3.0	1370	128
PHV10 (n_{1N} = 3000 rpm, $M_{2acc,max}$ = 7500 Nm)															
33	1826	3038	0.6	2.2	PHV1033_0910 EZ802U	7500	15000	91.00	91/1	2500	4500	62	3.0	1342	109
33	2179	3948	0.7	1.8	PHV1033_0910 EZ803U	7500	15000	91.00	91/1	2500	4500	87	3.0	1342	115
49	1460	2646	0.8	2.7	PHV1033_0610 EZ803U	7500	15000	61.00	61/1	2500	4500	90	3.0	1370	115
PHV10 (n_{1N} = 4500 rpm, $M_{2acc,max}$ = 7500 Nm)															
49	860	2826	0.3	4.4	PHV1033_0910 EZ802U	7500	15000	91.00	91/1	2500	4500	62	3.0	1342	109

5.3 Dimensional drawings

In this chapter you can find the dimensions of the geared motors.

There is a dimensional drawing for every possible shaft/housing design, each with the tables for gear unit dimensions, motor dimensions and geared motor dimensions.

Dimensions can exceed the specifications of ISO 2768-mK due to casting tolerances or accumulation of individual tolerances.

We reserve the right to make dimensional changes due to ongoing technical development.

You can download 3D models of our standard drives at http://configurator.stoeber.de.

Combination options and the dimensions of forced ventilated geared motors can also be found at http://configurator.stoeber.de.

5.3.1 F shaft design (flange shaft)

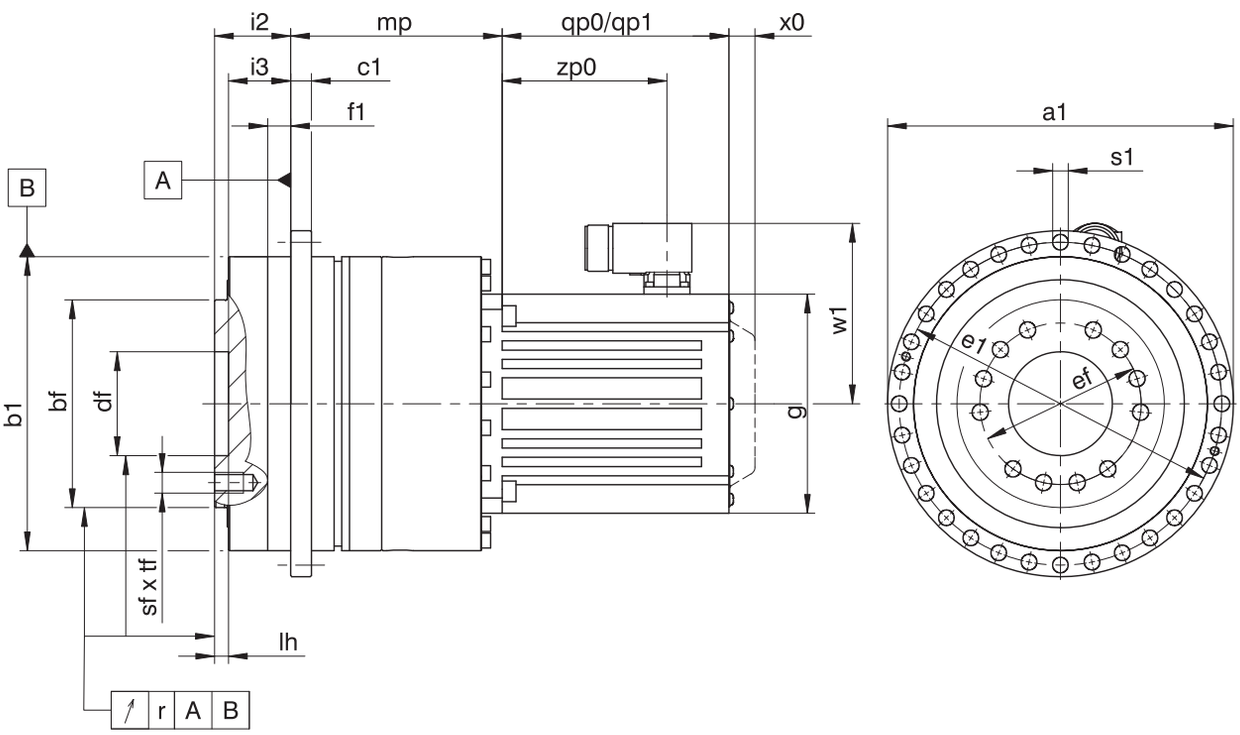

PHV9/PHV10

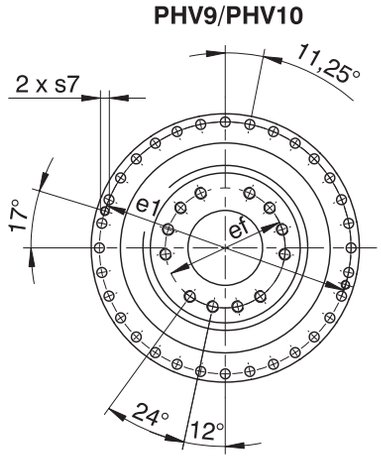

qp0	Applies to motors without brake.	qp1	Applies to motors with brake.
x0	Applies to encoders using an optical measuring method.	w1	Different for the One Cable Solution (OCS), see the chapter [▸ 17.4]

Dimensions of gear units

Type	Øa1	Øb1	Øbf	c1	Ødf	Øe1	Øef	f1	i2	i3	lh	r	Øs1	s7	sf	tf
PHV933	300	255_{h7}	180_{h7}	18	90^{H6}	280	140	20	66	55	12	0.030	13.5	M8	M16	24
PHV1033	330	285_{h7}	200_{h7}	20	95^{H6}	310	160	20	75	60	10	0.040	13.5	M10	M20	30

Dimensions of motors

Type	□g	qp0	qp1	w1	x0	zp0
EZ701U	145	102	161	115.0	22	64
EZ702U	145	127	186	115.0	22	89
EZ703U	145	152	211	115.0	22	114
EZ705U	145	207	266	134.0	22	165
EZ802U	190	197	274	156.5	22	143
EZ803U	190	238	315	156.5	22	184
EZ805U	190	320	397	156.5	22	266

Dimensions of geared motors

Type	EZ7 mp	EZ8 mp
PHV933	171.5	183.5
PHV1033	–	191.5

5.4 Type designation

This chapter shows you an explanation of the type designation with the associated options.

Additional ordering information not included in the type designation can be found at the end of the chapter.

Example code

PHV	9	3	3	F	0910	EZ703U

Explanation

Code	Designation	Design
PHV	Type	Planetary gear unit
9	Size	9 (example)
3	Generation	Generation 3
3	Stages	Three-stage
F	Shaft	Flange shaft
0910	Transmission ratio (i x 10)	i = 91 (example)
EZ703U	Motor	EZ synchronous servo motor

To complete the type designation, also specify the following in your order:

- A detailed type designation of the motor, see the chapter [▶ 17]
- Radial shaft seal rings at the output made of NBR or FKM (option), see the chapter [▶ 5.6.3]
- Reverse operation of the output shaft from ±20° to ±90° and horizontal installation, note the chapter [▶ 5.6.4]

5.4.1 Nameplate

An example geared motor nameplate is explained in the figure below.

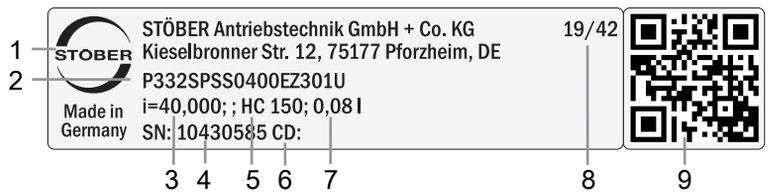

Code	Designation
1	Name of manufacturer
2	Type designation
3	Gear ratio of the gear unit
4	Serial number of the gear unit
5	Lubricant specification
6	Customer-specific data
7	Lubricant fill volume
8	Date of manufacture (year/calendar week)
9	QR code (link to product information)

5.4.1.1 Supporting documents

You can view or download supporting documents for the product by reading off the serial number on the nameplate of the product and entering it at the following address online:
https://id.stober.com

Alternatively, you can use a suitable mobile device to scan in the QR code on the nameplate of the product in order to be linked to the supporting documents.

5.5 Product description

5.5.1 Input options

EZ synchronous servo motor

http://www.stoeber.de/en/PHVEZ

5.5.2 Installation conditions

The torque and force values listed in this catalog are valid under the following conditions:

- When the flange shaft and gear housing are fastened on the machine side using screws of strength class 12.9
- When the gear housings are adjusted at pilot øb1. The machine-side fit must be H7.
- When the flange shaft is adjusted using the connecting element at pilot øbf or ødf

5.5.3 Lubricants

STOBER fills the gear units with the amount and type of lubricant specified on the nameplate.

You will receive lubricants for use in the food industry upon request.

5.5.4 Other product features

Feature	Value
Max. permitted gear unit temperature (on the surface of the gear unit)	≤ 90 °C
Paint	Black RAL 9005
Explosion-proof design in accordance with (ATEX) Directive 2014/34/EU (optional)	Not available
Efficiency: η_{get} three-stage	 90%
Protection class:[1] Gear unit Motor	 IP65 IP56, optionally IP66

5.5.5 Direction of rotation

The input and output rotate in the same direction.

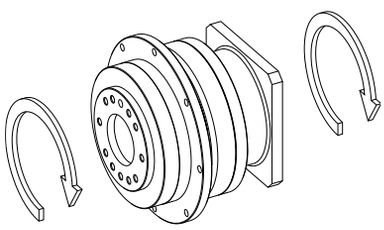

5.6 Project configuration

Project your drives using our SERVOsoft designing software. Download SERVOsoft for free at https://www.stoeber.de/en/ServoSoft.

Observe the limit conditions in this chapter to ensure a safe design for your drives.

An explanation of the formula symbols can be found in Chapter [▸ 23.1].

The formula symbols for values actually present in the application are marked with *.

5.6.1 Calculation of the operating point

Check the following conditions for operating points other than the nominal point M_{2N} specified in the selection tables.

$$n_{1m*} \leq \frac{n_{1maxDB}}{fB_T}$$

$$n_{1max*} \leq \frac{n_{1maxZB}}{fB_T}$$

$$M_{2eff*} \leq M_{2th}$$

$$M_{2acc*} \leq \frac{M_{2acc}}{fB_{ZB}}$$

$$M_{2NOT*} \leq M_{2NOT}$$

$$M_{2eq*} \leq M_{2N} \cdot \frac{S}{fB_{op} \cdot fB_t}$$

The values for n_{1maxDB}, n_{1maxZB}, M_{2acc}, M_{2NOT}, M_{2N} and S can be found in the selection tables.

The values for fB_T, fB_{op}, fB_t and fB_{ZB} can be found in the corresponding tables in this chapter.

Calculate the thermal limit torque M_{2th} for a duty cycle > 50%.

[1] Observe the protection class of all the components.

Example of cyclic operation

The following calculations are based on a representation of the power taken from the output based in accordance with the following example:

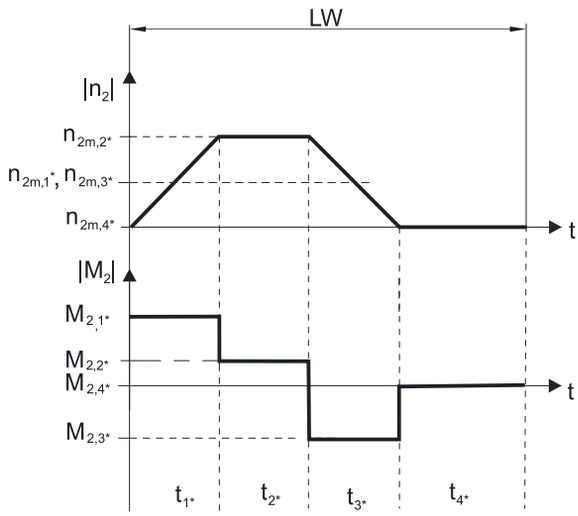

Calculation of the actual average input speed

$$n_{1m*} = n_{2m*} \cdot i$$

$$n_{2m*} = \frac{|n_{2m,1*}| \cdot t_{1*} + \ldots + |n_{2m,n*}| \cdot t_{n*}}{t_{1*} + \ldots + t_{n*}}$$

If $t_{1*} + \ldots + t_{3*} \geq 6$ min, calculate n_{2m*} without the rest phase t_{4*}.

The values for the ratio i can be found in the selection tables.

Calculation of the actual effective torque

$$M_{2eff*} = \sqrt{\frac{t_{1*} \cdot M_{2,1*}^{2} + \ldots + t_{n*} \cdot M_{2,n*}^{2}}{t_{1*} + \ldots + t_{n*}}}$$

Calculation of the actual equivalent torque

$$M_{2eq*} = \sqrt[3]{\frac{|n_{2m,1*}| \cdot t_{1*} \cdot |M_{2,1*}^{3}| + \ldots + |n_{2m,n*}| \cdot t_{n*} \cdot |M_{2,n*}^{3}|}{|n_{2m,1*}| \cdot t_{1*} + \ldots + |n_{2m,n*}| \cdot t_{n*}}}$$

Calculation of the thermal limit torque

Calculate the thermal limit torque M_{2th} for a duty cycle $ED_{10} > 50\%$ and the actual average input speed n_{1m*}. (At $K_{mot,th} \leq 0$ you must reduce the average input speed n_{1m*} accordingly or select another geared motor size.)

$$M_{2th} = M_{op} \cdot i \cdot K_{mot,th}$$

$$K_{mot,th} = 0{,}93 - \frac{a_{th}}{1000} \cdot fB_T \cdot \left(\frac{n_{1m*}}{1000}\right)^3$$

The values for i and a_{th} can be found in the selection tables.

The values for fB_T can be found in the corresponding table in this chapter.

The value for the torque of the motor at operating point M_{op} with the determined average input speed n_{1m*} can be found in the motor curve of Chapter [▶ 17.3]. Note the size, nominal speed n_N and cooling type of the motor. The figure below shows an example of reading the torque M_{op} of a motor with convection cooling at the operating point.

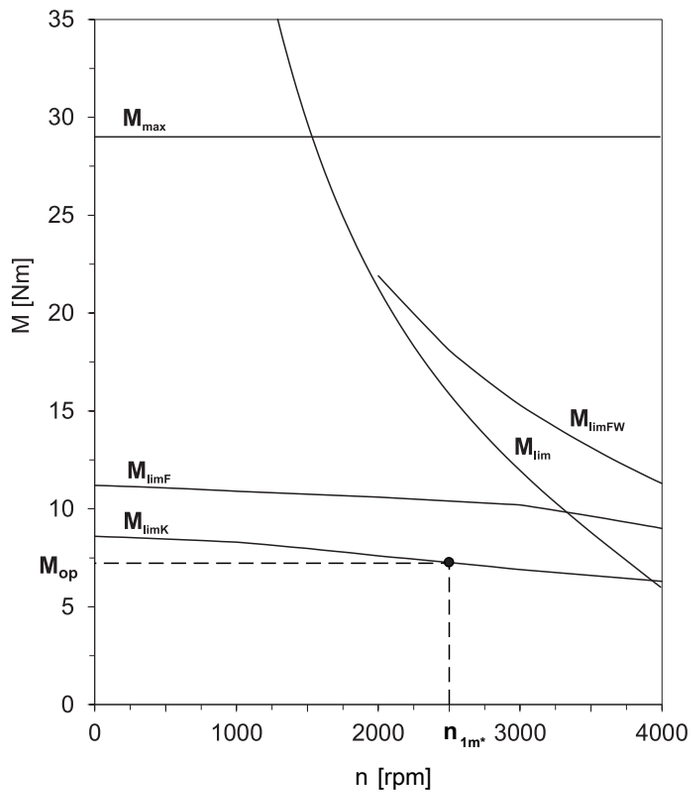

Operating factors

Operating mode	fB_{op}
Uniform continuous operation	1.00
Cyclic operation	1.00
Reversing load cyclic operation	1.00

Run time	fB_t
Daily runtime ≤ 8 h	1.00
Daily runtime ≤ 16 h	1.15
Daily runtime ≤ 24 h	1.20

Cyclic operation	fB_{ZB}
≤ 1000 load changes/hour (LW/h)	1.00
> 1000 load changes/hour (LW/h)	1.15

Temperature		fB_T
Motor cooling	**Surrounding temperature**	
Motor with forced ventilation	≤ 20 °C	0.9
	≤ 30 °C	1.0
	≤ 40 °C	1.15
Motor with convection cooling	≤ 20 °C	1.0
	≤ 30 °C	1.1
	≤ 40 °C	1.25

Notes

- The maximum permitted gear unit temperature (see the "Other product features" chapter) must not be exceeded. Doing so may result in damage to the geared motor.
- For braking from full speed (for example when the power fails or when setting up the machine), note the permitted gear unit torques (M_{2acc}, M_{2NOT}) in the selection tables.

5.6.2 Permitted shaft loads for the output shaft

The values specified in the tables apply to the permitted shaft loads:

- For shaft dimensions in accordance with the catalog
- For output speeds $n_{2m*} \leq 100$ rpm ($F^{2axN} = F_{2ax100}$; $F_{2radN} = F_{2rad100}$; $M_{2kN} = M_{2k100}$)
- Only if radial forces on the gear unit are stabilized by its pilots (housing, flange shaft)

Permitted shaft loads

Type	z_2 [mm]	F_{2ax100} [N]	$F_{2rad100}$ [N]	$F_{2rad,acc}$ [N]	M_{2k100} [Nm]	$M_{2k,acc}$ [Nm]	C_{2k} [Nm/ arcmin]
PHV9	155.0	33000	48387	70968	7500	11000	7500
PHV10	171.0	50000	51462	73099	8800	12500	9500

For other output speeds, download diagrams at http://configurator.stoeber.de.

The following applies to output speeds n_{2m*} > 100 rpm:

$$F_{2axN} = \frac{F_{2ax100}}{\sqrt[3]{\frac{n_{2m*}}{100\ \text{rpm}}}} \qquad F_{2radN} = \frac{F_{2rad100}}{\sqrt[3]{\frac{n_{2m*}}{100\ \text{rpm}}}} \qquad M_{2kN} = \frac{M_{2k100}}{\sqrt[3]{\frac{n_{2m*}}{100\ \text{rpm}}}}$$

The values for F_{2ax100}, $F_{2rad100}$ and M_{2k100} can be found in the table "Permitted shaft loads" in this chapter.

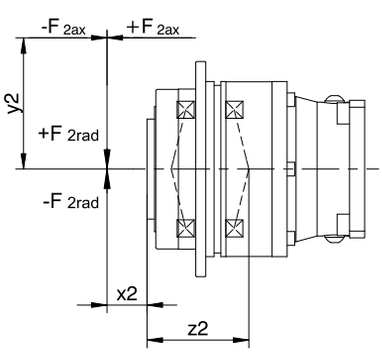

Fig. 1: Force application points

You can determine the permitted radial forces from the permitted breakdown torque M_{2kN} and $M_{2k,acc}$. The actual radial forces may not exceed the permitted radial forces. The permitted radial forces pertain to the shaft end (x2 = 0).

$$M_{2k,acc*} = \frac{2 \cdot F_{2ax*} \cdot y_2 + F_{2rad,acc*} \cdot (x_2 + z_2)}{1000} \leq M_{2k,acc}$$

For applications with multiple axial and/or radial forces, you must add the forces as vectors.

In the event of EMERGENCY OFF operation (max. 1000 load changes), you can multiply the permitted forces and torques for F_{2ax100}, $F_{2rad100}$ and M_{2k100} by a factor of two.

Also note the calculation for equivalent values:

$$M_{2k,eq*} = \sqrt[3]{\frac{|n_{2m,1*}| \cdot t_{1*} \cdot |M_{2k,acc,1*}{}^3| + \ldots + |n_{2m,n*}| \cdot t_{n*} \cdot |M_{2k,acc,n*}{}^3|}{|n_{2m,1*}| \cdot t_{1*} + \ldots + |n_{2m,n*}| \cdot t_{n*}}} \leq M_{2kN}$$

$$F_{2rad,eq*} = \sqrt[3]{\frac{|n_{2m,1*}| \cdot t_{1*} \cdot |F_{2rad,acc,1*}{}^3| + \ldots + |n_{2m,n*}| \cdot t_{n*} \cdot |F_{2rad,acc,n*}{}^3|}{|n_{2m,1*}| \cdot t_{1*} + \ldots + |n_{2m,n*}| \cdot t_{n*}}} \leq F_{2radN}$$

$$F_{2ax,eq*} \leq F_{2axN}$$

The following apply to the bearing service life L_{10h} ($ED_{10} \leq 40\%$):

L_{10h} > 10000 h with $1 < M_{2kN}/M_{2k*} < 1.25$

L_{10h} > 20000 h with $1.25 < M_{2kN}/M_{2k*} < 1.5$

L_{10h} > 30000 h with 1.5 < M_{2kN}/M_{2k*}

For different duty cycles:

$$L_{10h} > L_{10h(ED_{10}=40\%)} \cdot \frac{40\%}{ED_{10}}$$

5.6.3 Recommendation for radial shaft seal rings

For a duty cycle > 60% and higher surrounding temperatures, we recommend radial shaft seal rings made of FKM at the output.

Properties:

- Excellent temperature resistance
- High chemical stability
- Very good resistance to aging
- Excellent resistance in oils and greases
- For use in the food, beverage and pharmaceutical industries

Leak-proofness

Our gear units are equipped with high-quality radial shaft seal rings and checked for leaks. However, a leak cannot be fully ruled out over the length of use of a gear unit. If you use a gear unit with goods incompatible with the lubricant, you must take measures to prevent direct contact with the gear unit lubricant in case of a leak.

5.6.4 Reverse operation

To ensure lubrication for circulating gearing parts during cyclic reverse operation from ± 20° to ± 90° at the output, pay careful attention to the position of the output shaft for the horizontal mounting of the gear unit, as shown in the diagrams below.

The images show the center position of reverse operation.

Cyclic reverse operation ≤ ± 20° on request.

Size 9 – 10

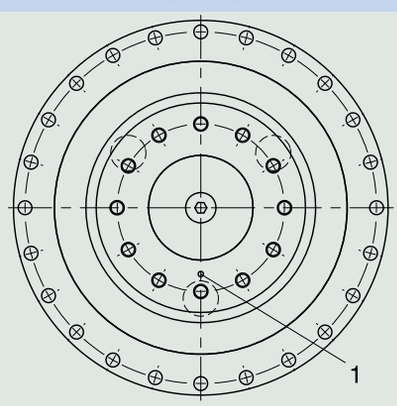

1 Position of the mark: bottom

Please note that the hole pattern may be different, depending on the size of the planetary gear unit.

5.7 Additional documentation

Additional documentation related to the product can be found at
http://www.stoeber.de/en/downloads/

Enter the ID of the documentation in the Search... field.

Documentation	ID
Operating manual for P/PE/PH/PHQ/PHV planetary gear units and planetary geared motors	443149_en

6 PE planetary geared motors

Table of contents

6.1 Overview 104

6.2 Selection tables 105

6.3 Dimensional drawings 109

6.3.1 P shaft design (solid shaft with feather key) 110

6.4 Type designation 111

6.4.1 Nameplate 111

6.5 Product description 112

6.5.1 Input options 112

6.5.2 Installation conditions 112

6.5.3 Lubricants 112

6.5.4 Other product features 112

6.5.5 Direction of rotation 113

6.6 Project configuration 113

6.6.1 Calculation of the operating point 113

6.6.2 Permitted shaft loads for the output shaft 116

6.6.3 Radial shaft seal rings 117

6.7 Additional documentation 117

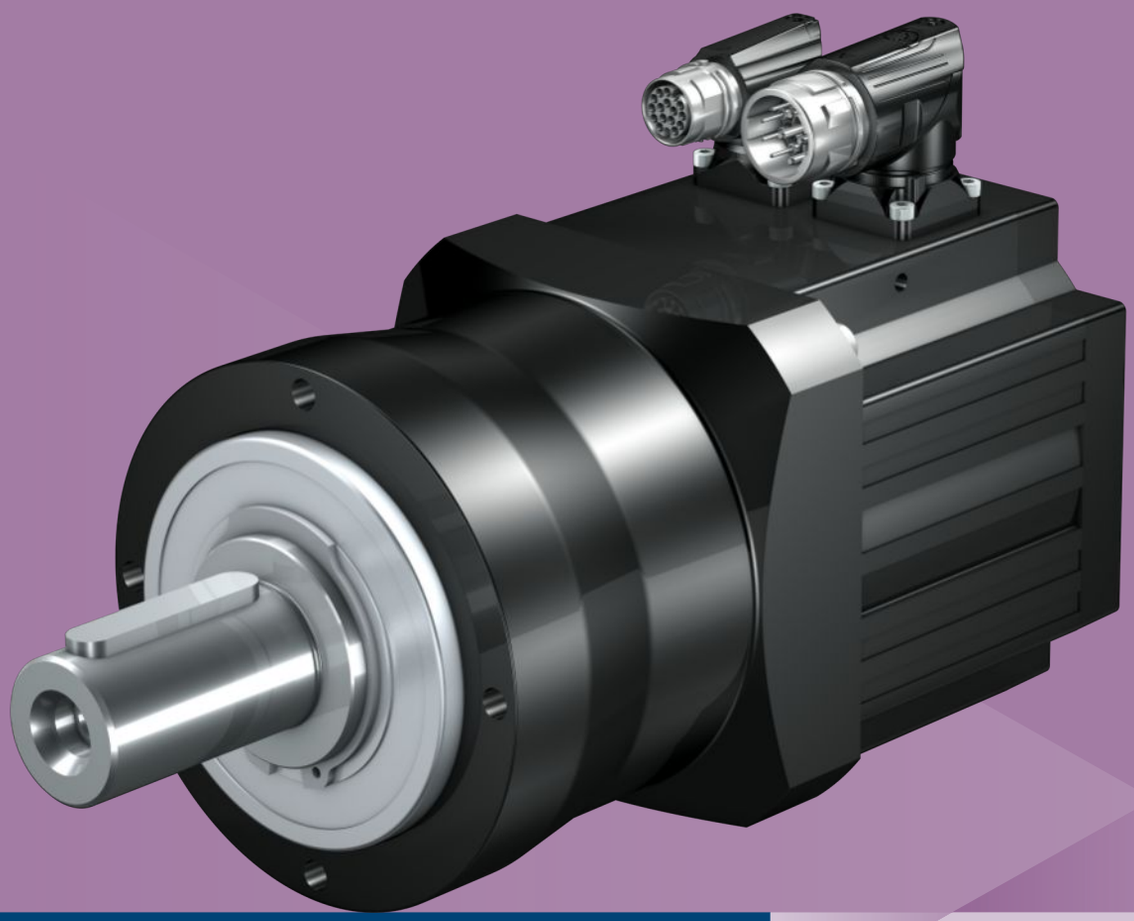

6 Planetary geared motors PE

6.1 Overview

Cost-efficient helical-geared planetary geared motors

Features

Power density	★★★☆☆
Backlash	★★★☆☆
Price category	€
Shaft load	★★☆☆☆
Smooth operation	★★★☆☆
Torsional stiffness	★★★☆☆
Mass moment of inertia	★★★★★
Helical gearing	✓
Maintenance-free	✓
Any mounting position	✓
Non-contact sealing at the input	✓
Compact and highly dynamic due to direct motor attachment	✓

Key ★☆☆☆☆ good | ★★★★★ excellent
€ Economy | €€€€€ Premium

Technical data

i	3 – 50
M_{2acc}	11 – 250 Nm
$\Delta\phi_2$	8 – 10 arcmin
η_{get}	95 – 97 %

6.2 Selection tables

The technical data specified in the selection tables applies to:

- Installation altitudes up to 1000 m above sea level
- Surrounding temperatures from 0 °C to 40 °C
- Drives with convection-cooled motors (e.g. EZ401**U**)

For the technical data on drives with forced ventilated motors (e.g. EZ401**B**), refer to http://configurator.stoeber.de.

An explanation of the formula symbols can be found in Chapter [▶ 23.1].

n_{2N} [rpm]	M_{2N} [Nm]	$M_{2,0}$ [Nm]	a_{th}	S	Type	M_{2acc} [Nm]	M_{2NOT} [Nm]	i	i_{exakt}	n_{1maxDB} [rpm]	n_{1maxZB} [rpm]	J_1 [kgcm²]	$\Delta\varphi_2$ [arcmin]	C_2 [Nm/arcmin]	m [kg]
PE2 (n_{1N} = 3000 rpm, $M_{2acc,max}$ = 19 Nm)															
429	6.3	6.5	2.7	1.0	PE221_0070 EZ301U	18	32	7.000	7/1	4500	8000	0.20	10.0	1.3	2.1
600	4.5	4.6	4.1	1.4	PE221_0050 EZ301U	14	32	5.000	5/1	4000	8000	0.21	10.0	1.4	2.1
750	3.6	3.7	5.4	1.8	PE221_0040 EZ301U	11	32	4.000	4/1	4000	8000	0.22	10.0	1.5	2.1
750	6.2	6.5	9.2	1.0	PE221_0040 EZ302U	19	32	4.000	4/1	4000	8000	0.32	10.0	1.5	2.7
PE2 (n_{1N} = 6000 rpm, $M_{2acc,max}$ = 14 Nm)															
1200	4.3	4.6	5.0	1.2	PE221_0050 EZ301U	14	32	5.000	5/1	4000	8000	0.21	10.0	1.4	2.1
1500	3.5	3.7	6.5	1.5	PE221_0040 EZ301U	11	32	4.000	4/1	4000	8000	0.22	10.0	1.5	2.1
PE3 (n_{1N} = 3000 rpm, $M_{2acc,max}$ = 50 Nm)															
120	22	23	3.6	1.1	PE322_0250 EZ301U	50	90	25.00	25/1	4000	8000	0.23	10.0	4.2	3.6
150	18	18	4.0	1.3	PE322_0200 EZ301U	50	90	20.00	20/1	4000	8000	0.25	10.0	4.0	3.6
188	14	14	4.5	1.7	PE322_0160 EZ301U	43	90	16.00	16/1	4000	8000	0.25	10.0	4.1	3.6
300	9.0	9.2	0.7	2.3	PE321_0100 EZ301U	27	90	10.00	10/1	4000	7000	0.20	8.0	3.7	3.0
300	15	16	1.2	1.3	PE321_0100 EZ302U	48	90	10.00	10/1	4000	7000	0.30	8.0	3.7	3.6
300	20	21	1.6	1.0	PE321_0100 EZ303U	48	90	10.00	10/1	4000	7000	0.41	8.0	3.7	4.1
429	6.3	6.5	1.1	3.3	PE321_0070 EZ301U	19	90	7.000	7/1	4000	7000	0.22	8.0	4.1	3.0
429	11	11	1.8	1.9	PE321_0070 EZ302U	34	90	7.000	7/1	4000	7000	0.32	8.0	4.1	3.6
429	14	15	2.4	1.5	PE321_0070 EZ303U	48	90	7.000	7/1	4000	7000	0.43	8.0	4.1	4.1
429	19	20	3.3	1.1	PE321_0070 EZ401U	50	90	7.000	7/1	4000	7000	0.96	8.0	4.1	5.5
600	4.5	4.6	1.7	4.4	PE321_0050 EZ301U	14	90	5.000	5/1	3700	7000	0.24	8.0	4.5	3.0
600	7.7	8.1	2.9	2.6	PE321_0050 EZ302U	24	90	5.000	5/1	3700	7000	0.34	8.0	4.5	3.6
600	10	11	3.7	2.0	PE321_0050 EZ303U	34	90	5.000	5/1	3700	7000	0.45	8.0	4.5	4.1
600	14	15	5.1	1.5	PE321_0050 EZ401U	41	90	5.000	5/1	3700	7000	0.98	8.0	4.5	5.5
750	6.2	6.5	3.9	3.1	PE321_0040 EZ302U	19	85	4.000	4/1	3700	7000	0.38	8.0	4.4	3.6
750	8.0	8.5	5.1	2.4	PE321_0040 EZ303U	27	85	4.000	4/1	3700	7000	0.49	8.0	4.4	4.1
750	11	12	6.9	1.8	PE321_0040 EZ401U	33	85	4.000	4/1	3700	7000	1.0	8.0	4.4	5.5
750	18	20	12	1.0	PE321_0040 EZ402U	46	85	4.000	4/1	3700	7000	1.7	8.0	4.4	6.6
1000	4.6	4.9	6.3	3.6	PE321_0030 EZ302U	15	64	3.000	3/1	3500	6000	0.47	8.0	3.5	3.6
1000	6.0	6.4	8.2	2.8	PE321_0030 EZ303U	20	64	3.000	3/1	3500	6000	0.58	8.0	3.5	4.1
1000	8.1	8.7	11	2.0	PE321_0030 EZ401U	25	64	3.000	3/1	3500	6000	1.1	8.0	3.5	5.5
1000	14	15	19	1.2	PE321_0030 EZ402U	40	64	3.000	3/1	3500	6000	1.8	8.0	3.5	6.6
PE3 (n_{1N} = 6000 rpm, $M_{2acc,max}$ = 50 Nm)															
300	17	18	4.8	1.1	PE322_0200 EZ301U	50	90	20.00	20/1	4000	8000	0.25	10.0	4.0	3.6
375	14	14	5.4	1.4	PE322_0160 EZ301U	43	90	16.00	16/1	4000	8000	0.25	10.0	4.1	3.6
600	8.6	9.2	0.9	1.9	PE321_0100 EZ301U	27	90	10.00	10/1	4000	7000	0.20	8.0	3.7	3.0
600	15	16	1.4	1.1	PE321_0100 EZ302U	48	90	10.00	10/1	4000	7000	0.30	8.0	3.7	3.6
857	6.0	6.5	1.3	2.7	PE321_0070 EZ301U	19	90	7.000	7/1	4000	7000	0.22	8.0	4.1	3.0
857	10	11	2.2	1.6	PE321_0070 EZ302U	34	90	7.000	7/1	4000	7000	0.32	8.0	4.1	3.6
857	13	15	2.9	1.2	PE321_0070 EZ303U	48	90	7.000	7/1	4000	7000	0.43	8.0	4.1	4.1
857	16	19	3.4	1.0	PE321_0070 EZ401U	50	90	7.000	7/1	4000	7000	0.96	8.0	4.1	5.5
1200	4.3	4.6	2.0	3.6	PE321_0050 EZ301U	14	90	5.000	5/1	3700	7000	0.24	8.0	4.5	3.0
1200	7.3	8.1	3.4	2.2	PE321_0050 EZ302U	24	90	5.000	5/1	3700	7000	0.34	8.0	4.5	3.6
1200	9.5	11	4.5	1.7	PE321_0050 EZ303U	34	90	5.000	5/1	3700	7000	0.45	8.0	4.5	4.1
1200	11	14	5.2	1.4	PE321_0050 EZ401U	41	90	5.000	5/1	3700	7000	0.98	8.0	4.5	5.5
1500	3.5	3.7	2.8	4.4	PE321_0040 EZ301U	11	85	4.000	4/1	3700	7000	0.28	8.0	4.4	3.0
1500	5.8	6.5	4.7	2.6	PE321_0040 EZ302U	19	85	4.000	4/1	3700	7000	0.38	8.0	4.4	3.6
1500	7.6	8.7	6.1	2.0	PE321_0040 EZ303U	27	85	4.000	4/1	3700	7000	0.49	8.0	4.4	4.1
1500	8.9	11	7.1	1.7	PE321_0040 EZ401U	33	85	4.000	4/1	3700	7000	1.0	8.0	4.4	5.5
1500	14	19	11	1.1	PE321_0040 EZ402U	46	85	4.000	4/1	3700	7000	1.7	8.0	4.4	6.6
2000	4.4	4.9	7.5	3.0	PE321_0030 EZ302U	15	64	3.000	3/1	3500	6000	0.47	8.0	3.5	3.6
2000	5.7	6.5	9.8	2.3	PE321_0030 EZ303U	20	64	3.000	3/1	3500	6000	0.58	8.0	3.5	4.1
2000	6.7	8.1	12	2.0	PE321_0030 EZ401U	25	64	3.000	3/1	3500	6000	1.1	8.0	3.5	5.5
2000	10	14	18	1.3	PE321_0030 EZ402U	40	64	3.000	3/1	3500	6000	1.8	8.0	3.5	6.6

n_{2N} [rpm]	M_{2N} [Nm]	$M_{2,0}$ [Nm]	a_{th}	S	Type	M_{2acc} [Nm]	M_{2NOT} [Nm]	i	i_{exakt}	n_{1maxDB} [rpm]	n_{1maxZB} [rpm]	J_1 [kgcm²]	$\Delta\varphi_2$ [arcmin]	C_2 [Nm/ arcmin]	m [kg]
PE4 (n_{1N} = 3000 rpm, $M_{2acc,max}$ = 110 Nm)															
60	44	45	1.3	1.2	PE422_0500 EZ301U	100	200	50.00	50/1	4000	7000	0.21	10.0	13	5.5
75	35	36	1.5	1.5	PE422_0400 EZ301U	95	190	40.00	40/1	4000	7000	0.21	10.0	13	5.5
86	31	32	1.6	1.7	PE422_0350 EZ301U	93	200	35.00	35/1	4000	7000	0.23	10.0	13	5.5
107	25	25	1.7	2.1	PE422_0280 EZ301U	74	190	28.00	28/1	4000	7000	0.23	10.0	13	5.5
107	42	45	3.0	1.2	PE422_0280 EZ302U	95	190	28.00	28/1	4000	7000	0.33	10.0	13	6.1
120	22	23	1.8	2.3	PE422_0250 EZ301U	67	200	25.00	25/1	3700	7000	0.27	10.0	13	5.5
120	38	40	3.2	1.4	PE422_0250 EZ302U	100	200	25.00	25/1	3700	7000	0.37	10.0	13	6.1
120	49	52	4.1	1.0	PE422_0250 EZ303U	100	200	25.00	25/1	3700	7000	0.48	10.0	13	6.6
150	18	18	2.1	2.9	PE422_0200 EZ301U	53	200	20.00	20/1	3700	7000	0.32	10.0	13	5.5
150	30	32	3.5	1.7	PE422_0200 EZ302U	95	200	20.00	20/1	3700	7000	0.42	10.0	13	6.1
150	39	42	4.6	1.3	PE422_0200 EZ303U	100	200	20.00	20/1	3700	7000	0.53	10.0	13	6.6
188	14	14	2.3	3.7	PE422_0160 EZ301U	43	190	16.00	16/1	3700	7000	0.32	10.0	13	5.5
188	24	26	4.0	2.1	PE422_0160 EZ302U	76	190	16.00	16/1	3700	7000	0.42	10.0	13	6.1
188	31	33	5.1	1.6	PE422_0160 EZ303U	95	190	16.00	16/1	3700	7000	0.53	10.0	13	6.6
188	43	46	7.0	1.2	PE422_0160 EZ401U	95	190	16.00	16/1	3700	7000	1.1	10.0	13	8.0
300	27	29	1.1	1.8	PE421_0100 EZ401U	82	180	10.00	10/1	3600	6000	0.97	8.0	10	6.8
300	42	46	1.7	1.1	PE421_0100 EZ501U	92	180	10.00	10/1	3600	6000	2.9	8.0	10	7.8
300	46	50	1.9	1.0	PE421_0100 EZ402U	92	180	10.00	10/1	3600	6000	1.7	8.0	10	7.9
429	19	20	1.7	2.5	PE421_0070 EZ401U	58	200	7.000	7/1	3600	6000	1.0	8.0	13	6.8
429	29	32	2.6	1.6	PE421_0070 EZ501U	100	200	7.000	7/1	3600	6000	3.0	8.0	13	7.8
429	32	35	2.9	1.5	PE421_0070 EZ402U	100	200	7.000	7/1	3600	6000	1.7	8.0	13	7.9
429	47	58	4.2	1.0	PE421_0070 EZ404U	100	200	7.000	7/1	3600	6000	3.1	8.0	13	10
600	14	15	2.8	3.3	PE421_0050 EZ401U	41	200	5.000	5/1	3400	6000	1.1	8.0	14	6.8
600	21	23	4.2	2.1	PE421_0050 EZ501U	78	200	5.000	5/1	3400	6000	3.1	8.0	14	7.8
600	23	25	4.6	2.0	PE421_0050 EZ402U	78	200	5.000	5/1	3400	6000	1.8	8.0	14	7.9
600	33	42	6.8	1.3	PE421_0050 EZ404U	110	200	5.000	5/1	3400	6000	3.2	8.0	14	10
600	36	39	7.3	1.2	PE421_0050 EZ502U	110	200	5.000	5/1	3400	6000	5.4	8.0	14	9.3
750	11	12	3.7	4.0	PE421_0040 EZ401U	33	200	4.000	4/1	3400	6000	1.2	8.0	14	6.8
750	17	18	5.6	2.6	PE421_0040 EZ501U	62	200	4.000	4/1	3400	6000	3.2	8.0	14	7.8
750	18	20	6.2	2.4	PE421_0040 EZ402U	62	200	4.000	4/1	3400	6000	1.9	8.0	14	7.9
750	27	33	9.0	1.6	PE421_0040 EZ404U	100	200	4.000	4/1	3400	6000	3.3	8.0	14	10
750	29	31	9.7	1.5	PE421_0040 EZ502U	100	200	4.000	4/1	3400	6000	5.5	8.0	14	9.3
750	38	43	13	1.2	PE421_0040 EZ503U	100	200	4.000	4/1	3400	6000	7.9	8.0	14	11
1000	8.1	8.7	6.3	4.4	PE421_0030 EZ401U	25	180	3.000	3/1	3000	5500	1.5	8.0	12	6.8
1000	13	14	9.7	2.9	PE421_0030 EZ501U	47	180	3.000	3/1	3000	5500	3.5	8.0	12	7.8
1000	14	15	11	2.6	PE421_0030 EZ402U	47	180	3.000	3/1	3000	5500	2.2	8.0	12	7.9
1000	20	25	16	1.8	PE421_0030 EZ404U	84	180	3.000	3/1	3000	5500	3.6	8.0	12	10
1000	22	23	17	1.7	PE421_0030 EZ502U	90	180	3.000	3/1	3000	5500	5.8	8.0	12	9.3
1000	28	32	22	1.3	PE421_0030 EZ503U	90	180	3.000	3/1	3000	5500	8.2	8.0	12	11
PE4 (n_{1N} = 4500 rpm, $M_{2acc,max}$ = 100 Nm)															
1125	37	59	14	1.0	PE421_0040 EZ505U	100	200	4.000	4/1	3400	6000	12	8.0	14	14
1500	28	45	25	1.1	PE421_0030 EZ505U	90	180	3.000	3/1	3000	5500	13	8.0	12	14
PE4 (n_{1N} = 6000 rpm, $M_{2acc,max}$ = 110 Nm)															
150	34	36	1.8	1.2	PE422_0400 EZ301U	95	190	40.00	40/1	4000	7000	0.21	10.0	13	5.5
171	30	32	1.9	1.4	PE422_0350 EZ301U	93	200	35.00	35/1	4000	7000	0.23	10.0	13	5.5
214	24	25	2.1	1.7	PE422_0280 EZ301U	74	190	28.00	28/1	4000	7000	0.23	10.0	13	5.5
214	40	45	3.6	1.0	PE422_0280 EZ302U	95	190	28.00	28/1	4000	7000	0.33	10.0	13	6.1
240	21	23	2.2	1.9	PE422_0250 EZ301U	67	200	25.00	25/1	3700	7000	0.27	10.0	13	5.5
240	36	40	3.8	1.1	PE422_0250 EZ302U	100	200	25.00	25/1	3700	7000	0.37	10.0	13	6.1
300	17	18	2.5	2.4	PE422_0200 EZ301U	53	200	20.00	20/1	3700	7000	0.32	10.0	13	5.5
300	29	32	4.2	1.4	PE422_0200 EZ302U	95	200	20.00	20/1	3700	7000	0.42	10.0	13	6.1
300	37	43	5.5	1.1	PE422_0200 EZ303U	100	200	20.00	20/1	3700	7000	0.53	10.0	13	6.6
375	14	14	2.8	3.0	PE422_0160 EZ301U	43	190	16.00	16/1	3700	7000	0.32	10.0	13	5.5
375	23	26	4.7	1.8	PE422_0160 EZ302U	76	190	16.00	16/1	3700	7000	0.42	10.0	13	6.1
375	30	34	6.1	1.4	PE422_0160 EZ303U	95	190	16.00	16/1	3700	7000	0.53	10.0	13	6.6
375	35	43	7.2	1.2	PE422_0160 EZ401U	95	190	16.00	16/1	3700	7000	1.1	10.0	13	8.0
600	22	27	1.2	1.7	PE421_0100 EZ401U	82	180	10.00	10/1	3600	6000	0.97	8.0	10	6.8
600	33	43	1.7	1.1	PE421_0100 EZ501U	92	180	10.00	10/1	3600	6000	2.9	8.0	10	7.8
600	34	48	1.8	1.1	PE421_0100 EZ402U	92	180	10.00	10/1	3600	6000	1.7	8.0	10	7.9
857	16	19	1.8	2.4	PE421_0070 EZ401U	58	200	7.000	7/1	3600	6000	1.0	8.0	13	6.8
857	23	30	2.6	1.6	PE421_0070 EZ501U	100	200	7.000	7/1	3600	6000	3.0	8.0	13	7.8
857	24	33	2.7	1.6	PE421_0070 EZ402U	100	200	7.000	7/1	3600	6000	1.7	8.0	13	7.9
857	35	53	4.0	1.1	PE421_0070 EZ502U	100	200	7.000	7/1	3600	6000	5.3	8.0	13	9.3
1200	11	14	2.9	3.2	PE421_0050 EZ401U	41	200	5.000	5/1	3400	6000	1.1	8.0	14	6.8
1200	16	21	4.2	2.1	PE421_0050 EZ501U	78	200	5.000	5/1	3400	6000	3.1	8.0	14	7.8

n_{2N} [rpm]	M_{2N} [Nm]	$M_{2,0}$ [Nm]	a_{th}	S	Type	M_{2acc} [Nm]	M_{2NOT} [Nm]	i	i_{exakt}	n_{1maxDB} [rpm]	n_{1maxZB} [rpm]	J_1 [kgcm²]	$\Delta\varphi_2$ [arcmin]	C_2 [Nm/ arcmin]	m [kg]
PE4 (n_{1N} = 6000 rpm, $M_{2acc,max}$ = 110 Nm)															
1200	17	24	4.3	2.1	PE421_0050 EZ402U	78	200	5.000	5/1	3400	6000	1.8	8.0	14	7.9
1200	25	38	6.5	1.4	PE421_0050 EZ502U	110	200	5.000	5/1	3400	6000	5.4	8.0	14	9.3
1200	28	41	7.2	1.3	PE421_0050 EZ404U	110	200	5.000	5/1	3400	6000	3.2	8.0	14	10
1200	30	51	7.7	1.2	PE421_0050 EZ503U	110	200	5.000	5/1	3400	6000	7.8	8.0	14	11
1500	8.9	11	3.8	3.9	PE421_0040 EZ401U	33	200	4.000	4/1	3400	6000	1.2	8.0	14	6.8
1500	13	17	5.6	2.6	PE421_0040 EZ501U	62	200	4.000	4/1	3400	6000	3.2	8.0	14	7.8
1500	14	19	5.8	2.6	PE421_0040 EZ402U	62	200	4.000	4/1	3400	6000	1.9	8.0	14	7.9
1500	20	30	8.6	1.7	PE421_0040 EZ502U	100	200	4.000	4/1	3400	6000	5.5	8.0	14	9.3
1500	23	33	9.6	1.5	PE421_0040 EZ404U	100	200	4.000	4/1	3400	6000	3.3	8.0	14	10
1500	24	41	10	1.4	PE421_0040 EZ503U	100	200	4.000	4/1	3400	6000	7.9	8.0	14	11
PE5 (n_{1N} = 3000 rpm, $M_{2acc,max}$ = 250 Nm)															
75	106	114	2.0	1.2	PE522_0400 EZ401U	240	480	40.00	40/1	3600	6000	0.99	10.0	33	12
86	93	100	2.1	1.4	PE522_0350 EZ401U	250	500	35.00	35/1	3600	6000	1.0	10.0	33	12
107	74	80	2.4	1.7	PE522_0280 EZ401U	230	480	28.00	28/1	3600	6000	1.0	10.0	33	12
107	114	125	3.6	1.1	PE522_0280 EZ501U	240	480	28.00	28/1	3600	6000	3.0	10.0	33	13
107	125	138	4.0	1.0	PE522_0280 EZ402U	240	480	28.00	28/1	3600	6000	1.7	10.0	33	13
120	67	71	2.5	1.9	PE522_0250 EZ401U	200	500	25.00	25/1	3400	6000	1.1	10.0	33	12
120	102	112	3.9	1.2	PE522_0250 EZ501U	250	500	25.00	25/1	3400	6000	3.1	10.0	33	13
120	112	124	4.2	1.1	PE522_0250 EZ402U	250	500	25.00	25/1	3400	6000	1.8	10.0	33	13
150	53	57	2.8	2.4	PE522_0200 EZ401U	160	500	20.00	20/1	3400	6000	1.3	10.0	33	12
150	82	89	4.3	1.6	PE522_0200 EZ501U	250	500	20.00	20/1	3400	6000	3.2	10.0	33	13
150	89	99	4.7	1.4	PE522_0200 EZ402U	250	500	20.00	20/1	3400	6000	2.0	10.0	33	13
188	43	46	3.1	3.0	PE522_0160 EZ401U	130	480	16.00	16/1	3400	6000	1.3	10.0	33	12
188	65	71	4.8	1.9	PE522_0160 EZ501U	240	480	16.00	16/1	3400	6000	3.3	10.0	33	13
188	71	79	5.3	1.8	PE522_0160 EZ402U	240	480	16.00	16/1	3400	6000	2.0	10.0	33	13
188	105	131	7.7	1.2	PE522_0160 EZ404U	240	480	16.00	16/1	3400	6000	3.3	10.0	33	15
188	112	122	8.3	1.1	PE522_0160 EZ502U	240	480	16.00	16/1	3400	6000	5.6	10.0	33	15
300	42	46	2.2	2.5	PE521_0100 EZ501U	160	440	10.00	10/1	3000	5000	3.1	8.0	27	11
300	72	78	3.7	1.4	PE521_0100 EZ502U	220	440	10.00	10/1	3000	5000	5.4	8.0	27	12
300	72	81	3.7	1.4	PE521_0100 EZ701U	190	440	10.00	10/1	3000	5000	8.7	8.0	27	14
300	94	108	4.9	1.1	PE521_0100 EZ503U	220	440	10.00	10/1	3000	5000	7.7	8.0	27	14
429	29	32	3.3	3.5	PE521_0070 EZ501U	110	500	7.000	7/1	2800	5000	3.2	8.0	32	11
429	50	54	5.7	2.1	PE521_0070 EZ502U	210	500	7.000	7/1	2800	5000	5.5	8.0	32	12
429	50	56	5.7	2.1	PE521_0070 EZ701U	140	500	7.000	7/1	2800	5000	8.8	8.0	32	14
429	66	75	7.5	1.6	PE521_0070 EZ503U	250	500	7.000	7/1	2800	5000	7.9	8.0	32	14
429	81	98	9.3	1.3	PE521_0070 EZ702U	250	500	7.000	7/1	2800	5000	14	8.0	32	17
429	92	109	10	1.1	PE521_0070 EZ505U	250	500	7.000	7/1	2800	5000	12	8.0	32	17
600	21	23	5.0	4.9	PE521_0050 EZ501U	78	430	5.000	5/1	2600	5000	3.5	8.0	36	11
600	36	39	8.6	2.9	PE521_0050 EZ502U	150	430	5.000	5/1	2600	5000	5.8	8.0	36	12
600	36	40	8.6	2.9	PE521_0050 EZ701U	97	500	5.000	5/1	2600	5000	9.1	8.0	36	14
600	47	54	11	2.2	PE521_0050 EZ503U	210	430	5.000	5/1	2600	5000	8.2	8.0	36	14
600	58	70	14	1.8	PE521_0050 EZ702U	200	500	5.000	5/1	2600	5000	14	8.0	36	17
600	65	78	16	1.6	PE521_0050 EZ505U	250	430	5.000	5/1	2600	5000	13	8.0	36	17
600	80	101	19	1.3	PE521_0050 EZ703U	250	500	5.000	5/1	2600	5000	22	8.0	36	19
750	29	31	11	3.6	PE521_0040 EZ502U	120	350	4.000	4/1	2600	5000	6.2	8.0	37	12
750	29	32	11	3.6	PE521_0040 EZ701U	78	500	4.000	4/1	2600	5000	9.5	8.0	37	14
750	38	43	15	2.7	PE521_0040 EZ503U	170	350	4.000	4/1	2600	5000	8.6	8.0	37	14
750	47	56	18	2.2	PE521_0040 EZ702U	160	500	4.000	4/1	2600	5000	15	8.0	37	17
750	52	62	20	2.0	PE521_0040 EZ505U	250	350	4.000	4/1	2600	5000	13	8.0	37	17
750	64	81	25	1.6	PE521_0040 EZ703U	250	500	4.000	4/1	2600	5000	23	8.0	37	19
750	83	117	32	1.2	PE521_0040 EZ705U	250	500	4.000	4/1	2600	5000	35	8.0	37	24
1000	22	23	23	3.3	PE521_0030 EZ502U	90	260	3.000	3/1	2500	4500	7.1	8.0	33	12
1000	22	24	23	3.3	PE521_0030 EZ701U	58	360	3.000	3/1	2500	4500	10	8.0	33	14
1000	28	32	30	2.5	PE521_0030 EZ503U	130	260	3.000	3/1	2500	4500	9.5	8.0	33	14
1000	35	42	37	2.0	PE521_0030 EZ702U	120	360	3.000	3/1	2500	4500	16	8.0	33	17
1000	39	47	42	1.8	PE521_0030 EZ505U	180	260	3.000	3/1	2500	4500	14	8.0	33	17
1000	48	61	51	1.5	PE521_0030 EZ703U	180	360	3.000	3/1	2500	4500	24	8.0	33	19
1000	62	88	66	1.2	PE521_0030 EZ705U	180	360	3.000	3/1	2500	4500	36	8.0	33	24
PE5 (n_{1N} = 4500 rpm, $M_{2acc,max}$ = 250 Nm)															
643	65	104	8.4	1.4	PE521_0070 EZ505U	250	500	7.000	7/1	2800	5000	12	8.0	32	17
643	82	136	11	1.1	PE521_0070 EZ703U	250	500	7.000	7/1	2800	5000	22	8.0	32	19
900	46	74	13	2.0	PE521_0050 EZ505U	250	430	5.000	5/1	2600	5000	13	8.0	36	17
900	59	97	16	1.5	PE521_0050 EZ703U	250	500	5.000	5/1	2600	5000	22	8.0	36	19
900	80	146	22	1.1	PE521_0050 EZ705U	250	500	5.000	5/1	2600	5000	35	8.0	36	24
1125	37	59	16	2.4	PE521_0040 EZ505U	250	350	4.000	4/1	2600	5000	13	8.0	37	17

n_{2N} [rpm]	M_{2N} [Nm]	$M_{2,0}$ [Nm]	a_{th}	S	Type	M_{2acc} [Nm]	M_{2NOT} [Nm]	i	i_{exakt}	n_{1maxDB} [rpm]	n_{1maxZB} [rpm]	J_1 [kgcm²]	$\Delta\varphi_2$ [arcmin]	C_2 [Nm/ arcmin]	m [kg]
PE5 (n_{1N} = 4500 rpm, $M_{2acc,max}$ = 250 Nm)															
1125	47	78	21	1.9	PE521_0040 EZ703U	250	500	4.000	4/1	2600	5000	23	8.0	37	19
1125	64	116	28	1.4	PE521_0040 EZ705U	250	500	4.000	4/1	2600	5000	35	8.0	37	24
1500	28	45	34	2.3	PE521_0030 EZ505U	180	260	3.000	3/1	2500	4500	14	8.0	33	17
1500	35	58	43	1.8	PE521_0030 EZ703U	180	360	3.000	3/1	2500	4500	24	8.0	33	19
1500	48	87	58	1.3	PE521_0030 EZ705U	180	360	3.000	3/1	2500	4500	36	8.0	33	24
PE5 (n_{1N} = 6000 rpm, $M_{2acc,max}$ = 250 Nm)															
150	87	106	2.1	1.2	PE522_0400 EZ401U	240	480	40.00	40/1	3600	6000	0.99	10.0	33	12
171	76	93	2.2	1.3	PE522_0350 EZ401U	250	500	35.00	35/1	3600	6000	1.0	10.0	33	12
214	61	74	2.5	1.6	PE522_0280 EZ401U	230	480	28.00	28/1	3600	6000	1.0	10.0	33	12
214	90	117	3.6	1.1	PE522_0280 EZ501U	240	480	28.00	28/1	3600	6000	3.0	10.0	33	13
214	93	130	3.7	1.1	PE522_0280 EZ402U	240	480	28.00	28/1	3600	6000	1.7	10.0	33	13
240	55	67	2.6	1.8	PE522_0250 EZ401U	200	500	25.00	25/1	3400	6000	1.1	10.0	33	12
240	81	105	3.8	1.2	PE522_0250 EZ501U	250	500	25.00	25/1	3400	6000	3.1	10.0	33	13
240	83	116	4.0	1.2	PE522_0250 EZ402U	250	500	25.00	25/1	3400	6000	1.8	10.0	33	13
300	44	53	2.9	2.3	PE522_0200 EZ401U	160	500	20.00	20/1	3400	6000	1.3	10.0	33	12
300	65	84	4.3	1.6	PE522_0200 EZ501U	250	500	20.00	20/1	3400	6000	3.2	10.0	33	13
300	67	93	4.4	1.5	PE522_0200 EZ402U	250	500	20.00	20/1	3400	6000	2.0	10.0	33	13
300	99	148	6.6	1.0	PE522_0200 EZ502U	250	500	20.00	20/1	3400	6000	5.5	10.0	33	15
375	35	43	3.3	2.9	PE522_0160 EZ401U	130	480	16.00	16/1	3400	6000	1.3	10.0	33	12
375	52	67	4.8	2.0	PE522_0160 EZ501U	240	480	16.00	16/1	3400	6000	3.3	10.0	33	13
375	53	74	4.9	1.9	PE522_0160 EZ402U	240	480	16.00	16/1	3400	6000	2.0	10.0	33	13
375	79	119	7.4	1.3	PE522_0160 EZ502U	240	480	16.00	16/1	3400	6000	5.6	10.0	33	15
375	88	128	8.2	1.1	PE522_0160 EZ404U	240	480	16.00	16/1	3400	6000	3.3	10.0	33	15
375	94	161	8.8	1.1	PE522_0160 EZ503U	240	480	16.00	16/1	3400	6000	7.9	10.0	33	16

6.3 Dimensional drawings

In this chapter you can find the dimensions of the geared motors.

There is a dimensional drawing for every possible shaft/housing design, each with the tables for gear unit dimensions, motor dimensions and geared motor dimensions.

Dimensions can exceed the specifications of ISO 2768-mK due to casting tolerances or accumulation of individual tolerances.

We reserve the right to make dimensional changes due to ongoing technical development.

You can download 3D models of our standard drives at http://configurator.stoeber.de.

Combination options and the dimensions of forced ventilated geared motors can also be found at http://configurator.stoeber.de.

Tolerances

Solid shaft	Tolerance
Fit	ISO k6
Feather keys	DIN 6885-1, high form A
Balancing	With half feather key

Centering holes in solid shafts in accordance with DIN 332-2, DR shape

Thread size	M4	M5	M6	M8	M10	M12	M16	M20	M24
Thread depth [mm]	10	12.5	16	19	22	28	36	42	50

6.3.1 P shaft design (solid shaft with feather key)

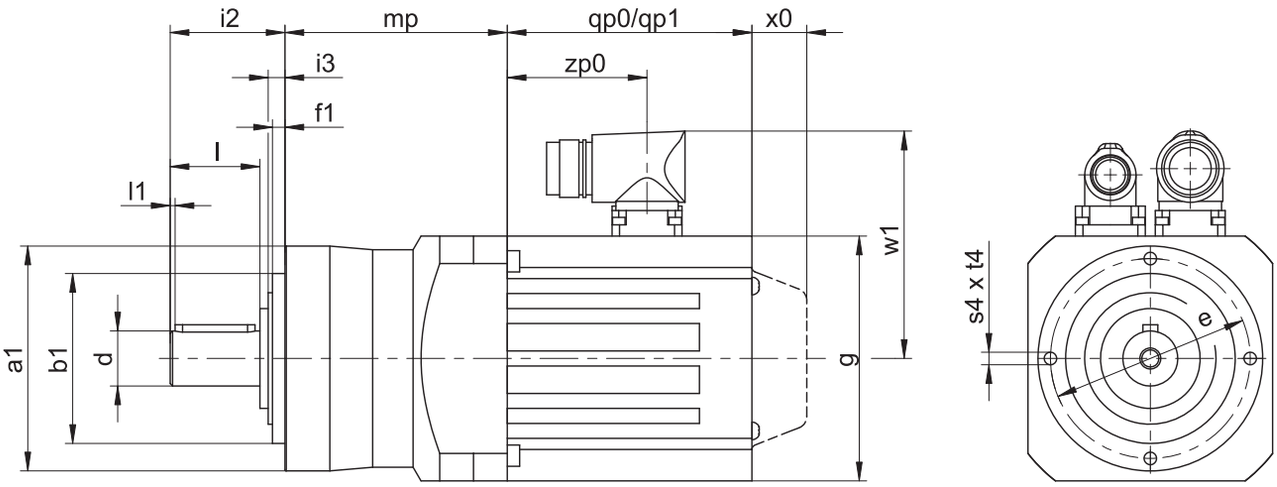

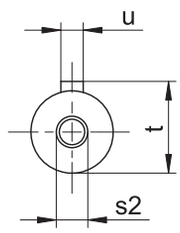

qp0	Applies to motors without brake.	qp1	Applies to motors with brake.
x0	Applies to encoders using an optical measuring method.	w1	Different for the One Cable Solution (OCS), see the chapter [▸ 17.4]

Dimensions of gear units

Type	Øa1	Øb1	Ød	Øe	f1	i2	i3	l	l1	s2	s4	t	t4	u
PE221	50	35_{h6}	12_{k6}	44	4	24.5	5.0	18	2	M4	M4	13.5	8	A4×4×14
PE321	70	52_{h6}	16_{k6}	62	5	36.0	6.0	28	2	M5	M5	18.0	10	A5×5×22
PE322	70	52_{h6}	16_{k6}	62	5	36.0	6.0	28	2	M5	M5	18.0	10	A5×5×22
PE421	90	68_{h6}	22_{k6}	80	5	46.0	6.5	36	2	M8	M6	24.5	12	A6×6×32
PE422	90	68_{h6}	22_{k6}	80	5	46.0	6.5	36	2	M8	M6	24.5	12	A6×6×32
PE521	120	90_{h6}	32_{k6}	108	6	70.0	8.0	58	4	M12	M8	35.0	16	A10×8×50
PE522	120	90_{h6}	32_{k6}	108	6	70.0	8.0	58	4	M12	M8	35.0	16	A10×8×50

Dimensions of motors

Type	□g	qp0	qp1	w1	x0	zp0
EZ301U	72	90	130.0	55.5	21	54.5
EZ302U	72	112	152.0	55.5	21	76.5
EZ303U	72	134	174.0	55.5	21	98.5
EZ401U	98	98	146.5	91.0	22	56.0
EZ402U	98	123	171.5	91.0	22	81.0
EZ404U	98	173	221.5	91.0	22	131.0
EZ501U	115	93	147.5	100.0	22	58.5
EZ502U	115	118	172.5	100.0	22	83.5
EZ503U	115	143	197.5	100.0	22	108.5
EZ505U	115	193	247.5	100.0	22	158.5
EZ701U	145	102	161.0	115.0	22	64.0
EZ702U	145	127	186.0	115.0	22	89.0
EZ703U	145	152	211.0	115.0	22	114.0
EZ705U	145	207	266.0	134.0	22	165.0

Dimensions of geared motors

Type	EZ3	EZ4	EZ5	EZ7
	mp	mp	mp	mp
PE221	73.0	–	–	–
PE321	86.5	83.0	–	–
PE322	120.0	–	–	–
PE421	–	89.0	91.5	–
PE422	129.0	125.5	–	–
PE521	–	–	110.0	113.0
PE522	–	152.0	151.5	–

6.4 Type designation

In this chapter, you can find an explanation of the type designation with the associated options.

Additional ordering information not included in the type designation can be found at the end of the chapter.

Example code

PE	**4**	**2**	**2**	**S**	**P**	**S**	**S**	**0200**	**EZ401U**

Explanation

Code	Designation	Design
PE	Type	Planetary gear unit
4	Size	4 (example)
2	Generation	Generation 2
1	Stages	Single-stage
2		Two-stage
S	Housing	Standard
P	Shaft	Solid shaft with feather key
S	Bearing	Standard bearing
S	Backlash	Standard
0200	Transmission ratio (i x 10)	i = 20 (example)
EZ401U	Motor	EZ synchronous servo motor

To complete the type designation, also specify the following in your order:

- A detailed type designation of the motor, see the chapter [▶ 17]

6.4.1 Nameplate

An example geared motor nameplate is explained in the figure below.

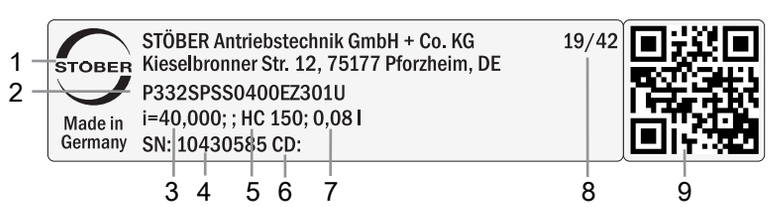

Code	Designation
1	Name of manufacturer
2	Type designation
3	Gear ratio of the gear unit
4	Serial number of the gear unit
5	Lubricant specification
6	Customer-specific data
7	Lubricant fill volume
8	Date of manufacture (year/calendar week)
9	QR code (link to product information)

6.4.1.1 Supporting documents

You can view or download supporting documents for the product by reading off the serial number on the nameplate of the product and entering it at the following address online:
https://id.stober.com

Alternatively, you can use a suitable mobile device to scan in the QR code on the nameplate of the product in order to be linked to the supporting documents.

6.5 Product description

6.5.1 Input options

EZ synchronous servo motor

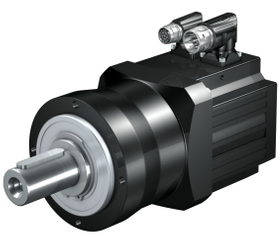

http://www.stoeber.de/en/PEEZ

LM Lean motor

http://www.stoeber.de/en/PELM

6.5.2 Installation conditions

The specified torques and forces only apply when gear units are fastened on the machine side using screws of strength class 10.9. In addition, the gear housings must be adjusted at the pilot. The machine-side fit must be H7.

6.5.3 Lubricants

STOBER fills the gear units with the amount and type of lubricant specified on the nameplate.

You will receive lubricants for use in the food industry upon request.

6.5.4 Other product features

Feature	Value
Max. permitted gear unit temperature (on the surface of the gear unit)	≤ 80 °C
Paint	Black RAL 9005
Explosion-proof design in accordance with (ATEX) Directive 2014/34/EU (optional)	Not available
Efficiency:	
η_{get} single-stage	97%
η_{get} two-stage	95%
Protection class:[1]	
Gear unit	IP64
Motor	IP56, optionally IP66

[1] Observe the protection class of all the components.

6.5.5 Direction of rotation

The input and output rotate in the same direction.

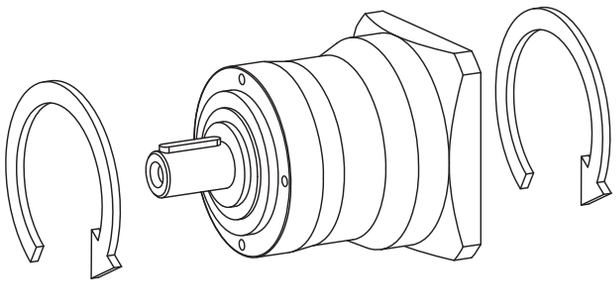

6.6 Project configuration

Project your drives using our SERVOsoft designing software. Download SERVOsoft for free at https://www.stoeber.de/en/ServoSoft.

Observe the limit conditions in this chapter to ensure a safe design for your drives.

An explanation of the formula symbols can be found in Chapter [▸ 23.1].

The formula symbols for values actually present in the application are marked with *.

6.6.1 Calculation of the operating point

Check the following conditions for operating points other than the nominal point M_{2N} specified in the selection tables.

$$n_{1m*} \leq \frac{n_{1maxDB}}{fB_T}$$

$$n_{1max*} \leq \frac{n_{1maxZB}}{fB_T}$$

$$M_{2eff*} \leq M_{2th}$$

$$M_{2acc*} \leq \frac{M_{2acc}}{fB_{ZB}}$$

$$M_{2NOT*} \leq M_{2NOT}$$

$$M_{2eq*} \leq M_{2N} \cdot \frac{S}{fB_{op} \cdot fB_t}$$

The values for n_{1maxDB}, n_{1maxZB}, M_{2acc}, M_{2NOT}, M_{2N} and S can be found in the selection tables.

The values for fB_T, fB_{op}, fB_t and fB_{ZB} can be found in the corresponding tables in this chapter.

Calculate the thermal limit torque M_{2th} for a duty cycle > 50%.

Example of cyclic operation

The following calculations are based on a representation of the power taken from the output based in accordance with the following example:

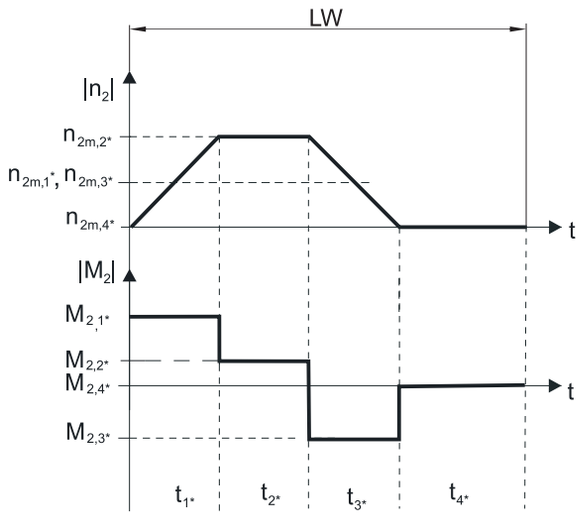

Calculation of the actual average input speed

$$n_{1m*} = n_{2m*} \cdot i$$

$$n_{2m*} = \frac{|n_{2m,1*}| \cdot t_{1*} + \ldots + |n_{2m,n*}| \cdot t_{n*}}{t_{1*} + \ldots + t_{n*}}$$

If $t_{1*} + \ldots + t_{3*} \geq 6$ min, calculate n_{2m*} without the rest phase t_{4*}.

The values for the ratio i can be found in the selection tables.

Calculation of the actual effective torque

$$M_{2eff*} = \sqrt{\frac{t_{1*} \cdot M_{2,1*}^{2} + \ldots + t_{n*} \cdot M_{2,n*}^{2}}{t_{1*} + \ldots + t_{n*}}}$$

Calculation of the actual equivalent torque

$$M_{2eq*} = \sqrt[3]{\frac{|n_{2m,1*}| \cdot t_{1*} \cdot |M_{2,1*}^{3}| + \ldots + |n_{2m,n*}| \cdot t_{n*} \cdot |M_{2,n*}^{3}|}{|n_{2m,1*}| \cdot t_{1*} + \ldots + |n_{2m,n*}| \cdot t_{n*}}}$$

Calculation of the thermal limit torque

Calculate the thermal limit torque M_{2th} for a duty cycle $ED_{10} > 50\%$ and the actual average input speed n_{1m*}. (At $K_{mot,th} \leq 0$ you must reduce the average input speed n_{1m*} accordingly or select another geared motor size.)

$$M_{2th} = M_{op} \cdot i \cdot K_{mot,th}$$

$$K_{mot,th} = 0{,}95 - \frac{a_{th}}{1000} \cdot fB_T \cdot \left(\frac{n_{1m*}}{1000}\right)^3$$

The values for i and a_{th} can be found in the selection tables.

The values for fB_T can be found in the corresponding table in this chapter.

The value for the torque of the motor at operating point M_{op} with the determined average input speed n_{1m*} can be found in the motor curve of Chapter [▶ 17.3]. Note the size, nominal speed n_N and cooling type of the motor. The figure below shows an example of reading the torque M_{op} of a motor with convection cooling at the operating point.

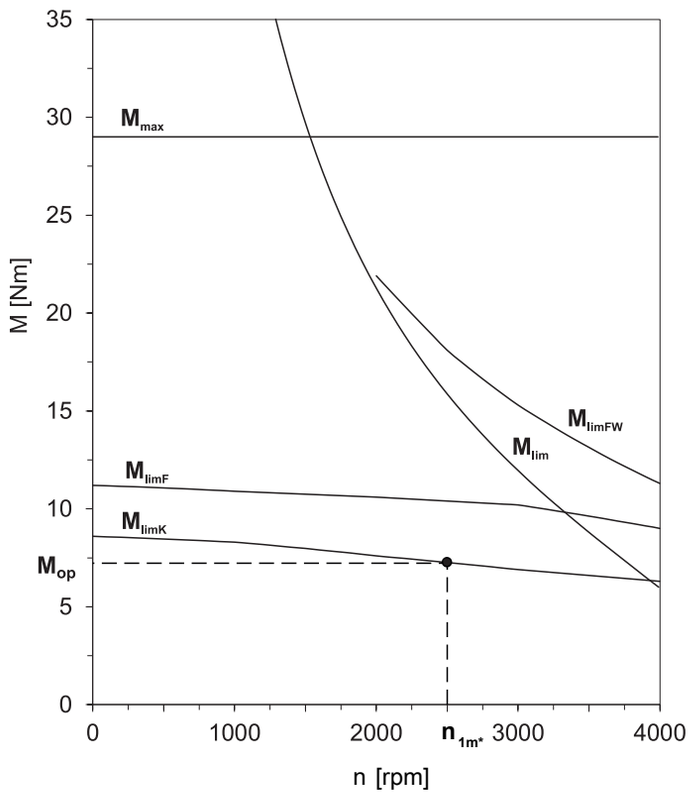

Operating factors

Operating mode	fB_{op}
Uniform continuous operation	1.00
Cyclic operation	1.00
Reversing load cyclic operation	1.00

Run time	fB_t
Daily runtime ≤ 8 h	1.00
Daily runtime ≤ 16 h	1.15
Daily runtime ≤ 24 h	1.20

Cyclic operation	fB_{ZB}
≤ 1000 load changes/hour (LW/h)	1.00
> 1000 load changes/hour (LW/h)	1.15

Temperature		fB_T
Motor cooling	**Surrounding temperature**	
Motor with forced ventilation	≤ 20 °C	0.9
	≤ 30 °C	1.0
	≤ 40 °C	1.15
Motor with convection cooling	≤ 20 °C	1.0
	≤ 30 °C	1.1
	≤ 40 °C	1.25

Notes

- The maximum permitted gear unit temperature (see the "Other product features" chapter) must not be exceeded. Doing so may result in damage to the geared motor.
- For braking from full speed (for example when the power fails or when setting up the machine), note the permitted gear unit torques (M_{2acc}, M_{2NOT}) in the selection tables.

6.6.2 Permitted shaft loads for the output shaft

The values specified in the tables apply to the permitted shaft loads:

- For shaft dimensions in accordance with the catalog
- For output speeds $n_{2m*} \leq 100$ rpm ($F^{2axN} = F_{2ax100}$; $F_{2radN} = F_{2rad100}$; $M_{2kN} = M_{2k100}$)
- Only if radial forces on the gear unit are stabilized by its pilots (housing, flange shaft)

Permitted shaft loads for standard bearing S

Type	z_2 [mm]	F_{2ax100} [N]	$F_{2rad100}$ [N]	$F_{2rad,acc}$ [N]	M_{2k100} [Nm]	$M_{2k,acc}$ [Nm]
PE2	8.0	400	800	800	13	13
PE3	11.0	800	1600	1600	40	40
PE4	13.0	1900	2400	2400	73	73
PE5	16.0	4000	4600	4600	206	206

For other output speeds, download diagrams at http://configurator.stoeber.de.

The following applies to output speeds n_{2m*} > 100 rpm:

$$F_{2axN} = \frac{F_{2ax100}}{\sqrt[3]{\frac{n_{2m*}}{100\ \text{rpm}}}} \qquad F_{2radN} = \frac{F_{2rad100}}{\sqrt[3]{\frac{n_{2m*}}{100\ \text{rpm}}}} \qquad M_{2kN} = \frac{M_{2k100}}{\sqrt[3]{\frac{n_{2m*}}{100\ \text{rpm}}}}$$

The values for F_{2ax100}, $F_{2rad100}$ and M_{2k100} can be found in the table "Permitted shaft loads" in this chapter.

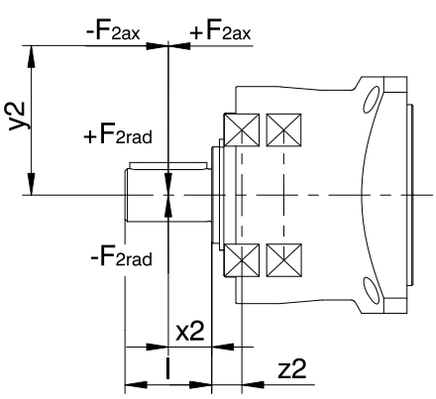

Fig. 1: Force application points

The specified values for $F_{2rad100}$ and $F_{2rad,acc}$ refer to an application of force at the center of the output shaft: $x_2 = l/2$.

Shaft dimensions can be found in the "Dimensional drawings" chapter.

The following applies to other force application points:

$$M_{2k,acc*} = \frac{2 \cdot F_{2ax*} \cdot y_2 + F_{2rad,acc*} \cdot (x_2 + z_2)}{1000} \leq M_{2k,acc}$$

$$F_{2rad,acc*} \leq F_{2rad,acc}$$

$$F_{2ax*} \leq F_{2axN}$$

The values for $F_{2rad,acc}$ and $M_{2k,acc}$ can be found in the table "Permitted shaft loads" in this chapter.

For applications with multiple axial and/or radial forces, you must add the forces as vectors.

In the event of EMERGENCY OFF operation (max. 1000 load changes), you can multiply the permitted forces and torques for F_{2ax100}, $F_{2rad100}$ and M_{2k100} by a factor of two.

Also note the calculation for equivalent values:

$$M_{2k,eq*} = \sqrt[3]{\frac{\left|n_{2m,1*}\right| \cdot t_{1*} \cdot \left|M_{2k,acc,1*}{}^{3}\right| + \ldots + \left|n_{2m,n*}\right| \cdot t_{n*} \cdot \left|M_{2k,acc,n*}{}^{3}\right|}{\left|n_{2m,1*}\right| \cdot t_{1*} + \ldots + \left|n_{2m,n*}\right| \cdot t_{n*}}} \leq M_{2kN}$$

$$F_{2rad,eq^*} = \sqrt[3]{\frac{\left|n_{2m,1^*}\right| \cdot t_{1^*} \cdot \left|F_{2rad,acc,1^*}{}^3\right| + \ldots + \left|n_{2m,n^*}\right| \cdot t_{n^*} \cdot \left|F_{2rad,acc,n^*}{}^3\right|}{\left|n_{2m,1^*}\right| \cdot t_{1^*} + \ldots + \left|n_{2m,n^*}\right| \cdot t_{n^*}}} \leq F_{2radN}$$

The following apply to the bearing service life L_{10h} ($ED_{10} \leq 40\%$):

$L_{10h} > 10000$ h with $1 < M_{2kN}/M_{2k^*} < 1.25$

$L_{10h} > 20000$ h with $1.25 < M_{2kN}/M_{2k^*} < 1.5$

$L_{10h} > 30000$ h with $1.5 < M_{2kN}/M_{2k^*}$

For different duty cycles:

$$L_{10h} > L_{10h(ED_{10}=40\%)} \cdot \frac{40\%}{ED_{10}}$$

6.6.3 Radial shaft seal rings

Leak-proofness

Our gear units are equipped with high-quality radial shaft seal rings and checked for leaks. However, a leak cannot be fully ruled out over the length of use of a gear unit. If you use a gear unit with goods incompatible with the lubricant, you must take measures to prevent direct contact with the gear unit lubricant in case of a leak.

6.7 Additional documentation

Additional documentation related to the product can be found at
http://www.stoeber.de/en/downloads/

Enter the ID of the documentation in the Search... field.

Documentation	ID
Operating manual for PE22 – PE52 planetary gear units and planetary geared motors	443252_en

7 C helical geared motors

Table of contents

7.1 Overview 120

7.2 Selection tables 121

7.3 Dimensional drawings 149

7.3.1 Solid shaft design with feather key, N housing design (foot) 150

7.3.2 Solid shaft design with feather key, G housing design (pitch circle diameter) 152

7.3.3 Solid shaft design with feather key, F housing design (round flange) 154

7.3.4 Solid shaft design with feather key, Q housing design (square flange) 156

7.3.5 Oil expansion tank 158

7.4 Type designation 159

7.4.1 Nameplate 159

7.5 Product description 160

7.5.1 Input options 160

7.5.2 Housing design 160

7.5.3 Shaft design 161

7.5.4 Installation conditions 161

7.5.5 Mounting positions 161

7.5.6 Lubricants 162

7.5.7 Position of the plug connectors 162

7.5.8 Other product features 162

7.5.9 Maintenance 162

7.5.10 Direction of rotation 163

7.6 Project configuration 163

7.6.1 Calculation of the operating point 163

7.6.2 Permitted shaft loads for the output shaft 166

7.6.3 Radial shaft seal rings 167

7.6.4 Oil expansion tank 167

7.7 Additional documentation 167

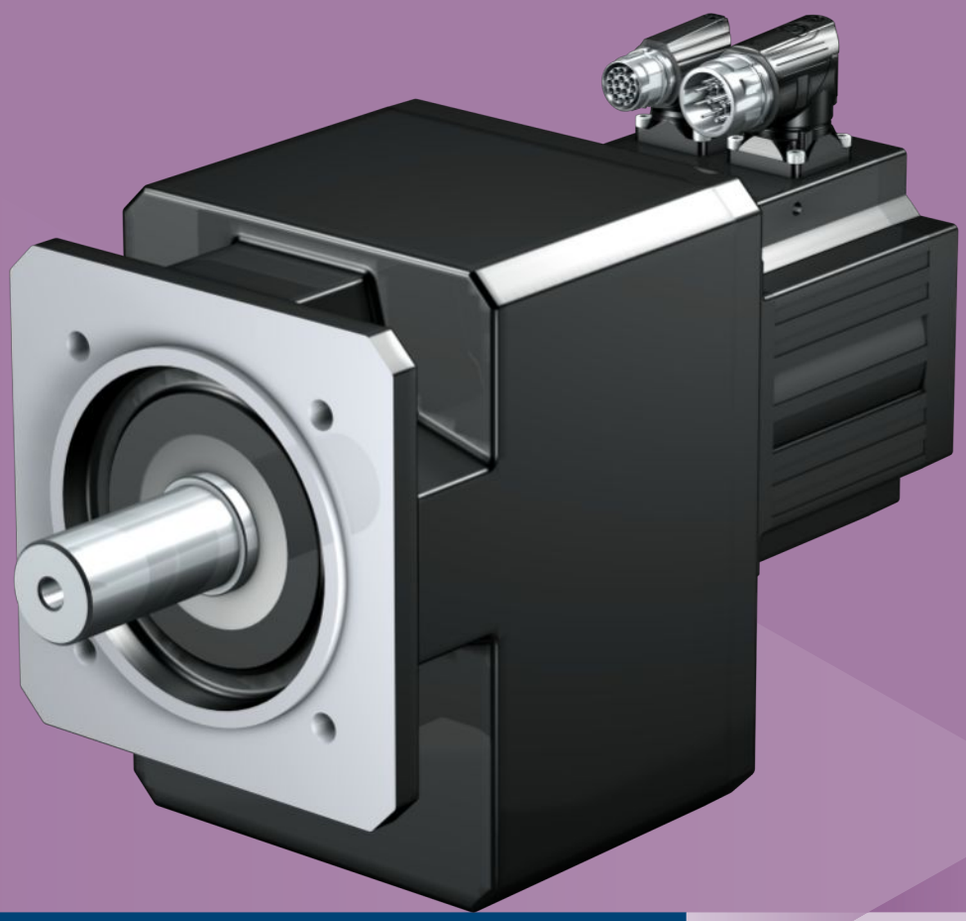

7 Helical geared motors

C

7.1 Overview

Compact helical geared motors

Features

Power density	★☆☆☆☆
Backlash	★★☆☆☆
Price category	€
Shaft load	★★☆☆☆
Smooth operation	★★★☆☆
Torsional stiffness	★★☆☆☆
Mass moment of inertia	★★★★★
Helical gearing	✓
Maintenance-free (C0 – C5)	✓
FKM seal ring at the input	✓
Reinforced output bearing	✓ (on request)
Compact and highly dynamic due to direct motor attachment	✓

Key ★☆☆☆☆ good | ★★★★★ excellent
€ Economy | €€€€€ Premium

Technical data

i	2 – 270
M_{2acc}	9.7 – 6500 Nm
$\Delta\phi_2$	10 – 20 arcmin
η_{get}	96 – 97 %

7.2 Selection tables

The technical data specified in the selection tables applies to:

- Installation altitudes up to 1000 m above sea level
- Surrounding temperatures from 0 °C to 40 °C
- Drives with convection-cooled motors (e.g. EZ401**U**)
- Weight specification for mounting position EL1, housing design N

For the technical data on drives with forced ventilated motors (e.g. EZ401**B**), refer to http://configurator.stoeber.de.

An explanation of the formula symbols can be found in Chapter [▸ 23.1].

n_{2N} [rpm]	M_{2N} [Nm]	$M_{2,0}$ [Nm]	a_{th}	S	Type	M_{2acc} [Nm]	M_{2NOT} [Nm]	i	i_{exakt}	n_{1maxDB} EL1,2,3,4 [rpm]	n_{1maxDB} EL5,6 [rpm]	n_{1maxZB} [rpm]	J_1 [kgcm²]	$\Delta\varphi_2$ [arcmin]	C_2 [Nm/arcmin]	m [kg]
C0 (n_{1N} = 3000 rpm, $M_{2acc,max}$ = 72 Nm)																
60	45	46	1.9	1.3	C002_0500 EZ301U	72	120	49.94	899/18	4000	4000	7000	0.21	16	1.6	7.5
64	42	43	1.9	1.4	C002_0470 EZ301U	65	120	46.82	7865/168	4000	4000	7000	0.21	16	1.6	7.5
72	38	38	1.7	1.6	C002_0420 EZ301U	72	120	41.77	3509/84	4000	4000	7000	0.21	16	1.6	7.5
86	32	32	1.6	1.9	C002_0350 EZ301U	65	120	35.03	1261/36	4000	4000	7000	0.23	16	1.6	7.5
96	28	29	1.5	2.1	C002_0310 EZ301U	72	120	31.26	2813/90	4000	4000	7000	0.23	16	1.6	7.5
96	48	51	2.6	1.2	C002_0310 EZ302U	72	120	31.26	2813/90	4000	4000	7000	0.33	16	1.6	8.1
107	25	26	1.4	2.4	C002_0280 EZ301U	65	120	27.99	2015/72	4000	4000	7000	0.25	16	1.6	7.5
107	43	46	2.4	1.4	C002_0280 EZ302U	65	120	27.99	2015/72	4000	4000	7000	0.35	16	1.6	8.1
120	23	23	1.4	2.7	C002_0250 EZ301U	68	120	24.97	899/36	4000	4000	7000	0.25	16	1.6	7.5
120	39	41	2.3	1.6	C002_0250 EZ302U	72	120	24.97	899/36	4000	4000	7000	0.35	16	1.6	8.1
120	50	53	3.0	1.2	C002_0250 EZ303U	72	120	24.97	899/36	4000	4000	7000	0.46	16	1.6	8.6
129	21	21	1.3	2.9	C002_0230 EZ301U	63	120	23.21	325/14	4000	4000	7000	0.27	16	1.6	7.5
129	36	38	2.2	1.7	C002_0230 EZ302U	65	120	23.21	325/14	4000	4000	7000	0.37	16	1.6	8.1
129	47	49	2.9	1.3	C002_0230 EZ303U	65	120	23.21	325/14	4000	4000	7000	0.48	16	1.6	8.6
145	19	19	1.2	3.2	C002_0210 EZ301U	56	120	20.71	145/7	4000	4000	7000	0.27	16	1.6	7.5
145	32	34	2.1	1.9	C002_0210 EZ302U	72	120	20.71	145/7	4000	4000	7000	0.37	16	1.6	8.1
145	42	44	2.7	1.4	C002_0210 EZ303U	72	120	20.71	145/7	4000	4000	7000	0.48	16	1.6	8.6
171	16	16	1.1	3.8	C002_0175 EZ301U	48	120	17.53	3575/204	4000	4000	6500	0.31	16	1.6	7.5
171	27	29	1.9	2.2	C002_0175 EZ302U	65	120	17.53	3575/204	4000	4000	6500	0.41	16	1.6	8.1
171	35	37	2.5	1.7	C002_0175 EZ303U	65	120	17.53	3575/204	4000	4000	6500	0.52	16	1.6	8.6
192	14	14	1.1	4.3	C002_0155 EZ301U	42	110	15.64	1595/102	4000	4000	6500	0.31	16	1.6	7.5
192	24	25	1.8	2.5	C002_0155 EZ302U	72	110	15.64	1595/102	4000	4000	6500	0.41	16	1.6	8.1
192	31	33	2.4	1.9	C002_0155 EZ303U	72	110	15.64	1595/102	4000	4000	6500	0.52	16	1.6	8.6
192	42	46	3.2	1.4	C002_0155 EZ401U	72	120	15.64	1595/102	4000	4000	6500	1.0	16	1.6	10
213	13	13	1.0	4.7	C002_0140 EZ301U	38	100	14.08	169/12	4000	4000	6500	0.35	16	1.6	7.5
213	22	23	1.7	2.8	C002_0140 EZ302U	65	100	14.08	169/12	4000	4000	6500	0.45	16	1.6	8.1
213	28	30	2.3	2.1	C002_0140 EZ303U	65	100	14.08	169/12	4000	4000	6500	0.56	16	1.6	8.6
213	38	41	3.1	1.6	C002_0140 EZ401U	65	120	14.08	169/12	4000	4000	6500	1.1	16	1.6	10
239	19	20	1.6	3.1	C002_0125 EZ302U	61	91	12.57	377/30	4000	4000	6500	0.45	16	1.6	8.1
239	25	27	2.1	2.4	C002_0125 EZ303U	72	91	12.57	377/30	4000	4000	6500	0.56	16	1.6	8.6
239	34	37	2.9	1.8	C002_0125 EZ401U	72	120	12.57	377/30	4000	4000	6500	1.1	16	1.6	10
260	18	19	1.6	3.3	C002_0115 EZ302U	56	84	11.54	3185/276	3700	3700	6000	0.49	16	1.6	8.1
260	23	25	2.1	2.5	C002_0115 EZ303U	65	84	11.54	3185/276	3700	3700	6000	0.60	16	1.6	8.6
260	31	34	2.9	1.9	C002_0115 EZ401U	65	120	11.54	3185/276	3700	3700	6000	1.1	16	1.6	10
291	16	17	1.6	3.5	C002_0105 EZ302U	50	75	10.30	1421/138	3700	3700	6000	0.49	16	1.6	8.1
291	21	22	2.1	2.7	C002_0105 EZ303U	60	75	10.30	1421/138	3700	3700	6000	0.60	16	1.6	8.6
291	28	30	2.8	2.0	C002_0105 EZ401U	72	120	10.30	1421/138	3700	3700	6000	1.1	16	1.6	10
291	43	47	4.3	1.3	C002_0105 EZ501U	72	120	10.30	1421/138	3700	3700	6000	3.1	16	1.6	11
291	47	52	4.7	1.2	C002_0105 EZ402U	72	120	10.30	1421/138	3700	3700	6000	1.8	16	1.6	11
325	14	15	1.6	3.8	C002_0092 EZ302U	45	67	9.228	1495/162	3700	3700	6000	0.56	16	1.6	8.1
325	19	20	2.0	2.9	C002_0092 EZ303U	54	67	9.228	1495/162	3700	3700	6000	0.67	16	1.6	8.6
325	25	27	2.7	2.2	C002_0092 EZ401U	65	120	9.228	1495/162	3700	3700	6000	1.2	16	1.6	10
325	38	42	4.2	1.4	C002_0092 EZ501U	65	120	9.228	1495/162	3700	3700	6000	3.2	16	1.6	11
325	42	47	4.6	1.3	C002_0092 EZ402U	65	120	9.228	1495/162	3700	3700	6000	1.9	16	1.6	11
364	13	13	1.7	3.8	C002_0082 EZ302U	40	60	8.235	667/81	3700	3700	6000	0.56	16	1.6	8.1
364	17	17	2.2	2.9	C002_0082 EZ303U	48	60	8.235	667/81	3700	3700	6000	0.67	16	1.6	8.6
364	22	24	2.7	2.3	C002_0082 EZ401U	68	120	8.235	667/81	3700	3700	6000	1.2	16	1.6	10
364	34	38	4.1	1.5	C002_0082 EZ501U	72	120	8.235	667/81	3700	3700	6000	3.2	16	1.6	11
364	38	42	4.5	1.4	C002_0082 EZ402U	72	120	8.235	667/81	3700	3700	6000	1.9	16	1.6	11
389	12	13	1.8	3.5	C002_0077 EZ302U	37	53	7.714	54/7	4000	4000	7000	0.38	20	1.3	8.1
389	15	16	2.4	2.7	C002_0077 EZ303U	42	53	7.714	54/7	4000	4000	7000	0.49	20	1.3	8.6

n_{2N} [rpm]	M_{2N} [Nm]	$M_{2,0}$ [Nm]	a_{th}	S	Type	M_{2acc} [Nm]	M_{2NOT} [Nm]	i	i_{exakt}	n_{1maxDB} EL1,2,3,4 [rpm]	n_{1maxDB} EL5,6 [rpm]	n_{1maxZB} [rpm]	J_1 [kgcm²]	$\Delta\varphi_2$ [arcmin]	C_2 [Nm/arcmin]	m [kg]
C0 (n_{1N} = 3000 rpm, $M_{2acc,max}$ = 72 Nm)																
389	21	22	3.1	2.1	C002_0077 EZ401U	64	110	7.714	54/7	4000	4000	7000	1.0	20	1.3	10
389	32	35	4.8	1.3	C002_0077 EZ501U	65	110	7.714	54/7	4000	4000	7000	3.0	20	1.3	11
389	35	39	5.3	1.2	C002_0077 EZ402U	65	110	7.714	54/7	4000	4000	7000	1.7	20	1.3	11
476	9.7	10	1.9	3.8	C002_0063 EZ302U	31	46	6.300	2035/323	4000	4000	6500	0.43	20	1.3	8.1
476	13	13	2.5	2.9	C002_0063 EZ303U	37	46	6.300	2035/323	4000	4000	6500	0.54	20	1.3	8.6
476	17	18	3.0	2.4	C002_0063 EZ401U	52	110	6.300	2035/323	4000	4000	6500	1.1	20	1.3	10
476	26	29	4.7	1.5	C002_0063 EZ501U	65	110	6.300	2035/323	4000	4000	6500	3.0	20	1.3	11
476	29	32	5.1	1.4	C002_0063 EZ402U	65	110	6.300	2035/323	4000	4000	6500	1.8	20	1.3	11
515	9.0	9.5	2.0	3.8	C002_0058 EZ302U	28	42	5.824	99/17	4000	4000	6500	0.43	20	1.3	8.1
515	12	12	2.6	2.9	C002_0058 EZ303U	34	42	5.824	99/17	4000	4000	6500	0.54	20	1.3	8.6
515	16	17	3.0	2.5	C002_0058 EZ401U	48	110	5.824	99/17	4000	4000	6500	1.1	20	1.3	10
515	24	27	4.6	1.6	C002_0058 EZ501U	65	110	5.824	99/17	4000	4000	6500	3.0	20	1.3	11
515	27	29	5.0	1.5	C002_0058 EZ402U	65	110	5.824	99/17	4000	4000	6500	1.8	20	1.3	11
515	39	49	7.4	1.0	C002_0058 EZ404U	65	110	5.824	99/17	4000	4000	6500	3.1	20	1.3	13
593	7.8	8.3	2.1	3.8	C002_0051 EZ302U	25	37	5.063	481/95	4000	4000	6500	0.48	20	1.3	8.1
593	10	11	2.8	2.9	C002_0051 EZ303U	29	37	5.063	481/95	4000	4000	6500	0.59	20	1.3	8.6
593	14	15	2.9	2.7	C002_0051 EZ401U	42	110	5.063	481/95	4000	4000	6500	1.1	20	1.3	10
593	21	23	4.5	1.8	C002_0051 EZ501U	65	110	5.063	481/95	4000	4000	6500	3.1	20	1.3	11
593	23	26	4.9	1.6	C002_0051 EZ402U	65	110	5.063	481/95	4000	4000	6500	1.8	20	1.3	11
593	34	42	7.2	1.1	C002_0051 EZ404U	65	110	5.063	481/95	4000	4000	6500	3.2	20	1.3	13
593	36	39	7.8	1.0	C002_0051 EZ502U	65	110	5.063	481/95	4000	4000	6500	5.4	20	1.3	13
593	36	41	7.8	1.0	C002_0051 EZ701U	65	110	5.063	481/95	4000	4000	6500	8.7	20	1.3	14
641	7.2	7.6	2.2	3.8	C002_0047 EZ302U	23	34	4.680	117/25	4000	4000	6500	0.49	20	1.3	8.1
641	9.4	9.9	2.9	2.9	C002_0047 EZ303U	27	34	4.680	117/25	4000	4000	6500	0.60	20	1.3	8.6
641	13	14	2.9	2.9	C002_0047 EZ401U	39	110	4.680	117/25	4000	4000	6500	1.1	20	1.3	10
641	20	21	4.5	1.9	C002_0047 EZ501U	65	110	4.680	117/25	4000	4000	6500	3.1	20	1.3	11
641	21	24	4.9	1.7	C002_0047 EZ402U	65	110	4.680	117/25	4000	4000	6500	1.8	20	1.3	11
641	31	39	7.1	1.2	C002_0047 EZ404U	65	110	4.680	117/25	4000	4000	6500	3.2	20	1.3	13
641	34	36	7.7	1.1	C002_0047 EZ502U	65	110	4.680	117/25	4000	4000	6500	5.4	20	1.3	13
641	34	38	7.7	1.1	C002_0047 EZ701U	65	110	4.680	117/25	4000	4000	6500	8.7	20	1.3	14
723	6.4	6.8	2.3	3.8	C002_0041 EZ302U	20	30	4.149	1813/437	3700	3700	6000	0.55	20	1.3	8.1
723	8.3	8.8	3.0	2.9	C002_0041 EZ303U	24	30	4.149	1813/437	3700	3700	6000	0.66	20	1.3	8.6
723	11	12	2.8	3.1	C002_0041 EZ401U	34	110	4.149	1813/437	3700	3700	6000	1.2	20	1.3	10
723	17	19	4.4	2.0	C002_0041 EZ501U	64	110	4.149	1813/437	3700	3700	6000	3.2	20	1.3	11
723	19	21	4.8	1.9	C002_0041 EZ402U	64	110	4.149	1813/437	3700	3700	6000	1.9	20	1.3	11
723	28	35	7.0	1.3	C002_0041 EZ404U	65	110	4.149	1813/437	3700	3700	6000	3.2	20	1.3	13
723	30	32	7.5	1.2	C002_0041 EZ502U	65	110	4.149	1813/437	3700	3700	6000	5.5	20	1.3	13
723	30	33	7.5	1.2	C002_0041 EZ701U	65	110	4.149	1813/437	3700	3700	6000	8.8	20	1.3	14
782	5.9	6.3	2.4	3.8	C002_0038 EZ302U	19	28	3.835	441/115	3700	3700	6000	0.55	20	1.3	8.1
782	7.7	8.1	3.2	2.9	C002_0038 EZ303U	22	28	3.835	441/115	3700	3700	6000	0.66	20	1.3	8.6
782	10	11	2.8	3.3	C002_0038 EZ401U	32	110	3.835	441/115	3700	3700	6000	1.2	20	1.3	10
782	16	17	4.3	2.1	C002_0038 EZ501U	60	110	3.835	441/115	3700	3700	6000	3.2	20	1.3	11
782	17	19	4.7	2.0	C002_0038 EZ402U	60	110	3.835	441/115	3700	3700	6000	1.9	20	1.3	11
782	26	32	6.9	1.3	C002_0038 EZ404U	65	110	3.835	441/115	3700	3700	6000	3.2	20	1.3	13
782	28	30	7.4	1.2	C002_0038 EZ502U	65	110	3.835	441/115	3700	3700	6000	5.5	20	1.3	13
782	28	31	7.4	1.2	C002_0038 EZ701U	65	110	3.835	441/115	3700	3700	6000	8.8	20	1.3	14
904	5.1	5.4	2.6	3.8	C002_0033 EZ302U	16	24	3.318	1702/513	3700	3700	6000	0.65	20	1.3	8.1
904	6.7	7.0	3.4	2.9	C002_0033 EZ303U	19	24	3.318	1702/513	3700	3700	6000	0.76	20	1.3	8.6
904	9.0	9.7	2.7	3.6	C002_0033 EZ401U	27	97	3.318	1702/513	3700	3700	6000	1.3	20	1.3	10
904	14	15	4.2	2.4	C002_0033 EZ501U	51	97	3.318	1702/513	3700	3700	6000	3.3	20	1.3	11
904	15	17	4.6	2.2	C002_0033 EZ402U	51	97	3.318	1702/513	3700	3700	6000	2.0	20	1.3	11
904	22	28	6.7	1.5	C002_0033 EZ404U	62	97	3.318	1702/513	3700	3700	6000	3.3	20	1.3	13
904	24	26	7.2	1.4	C002_0033 EZ502U	62	97	3.318	1702/513	3700	3700	6000	5.6	20	1.3	13
904	24	27	7.2	1.4	C002_0033 EZ701U	62	97	3.318	1702/513	3700	3700	6000	8.9	20	1.3	14
904	31	36	9.5	1.0	C002_0033 EZ503U	62	97	3.318	1702/513	3700	3700	6000	7.9	20	1.3	14
978	4.7	5.0	2.7	3.8	C002_0031 EZ302U	15	22	3.067	46/15	3700	3700	6000	0.66	20	1.3	8.1
978	6.2	6.5	3.5	2.9	C002_0031 EZ303U	18	22	3.067	46/15	3700	3700	6000	0.77	20	1.3	8.6
978	8.3	8.9	2.7	3.8	C002_0031 EZ401U	25	89	3.067	46/15	3700	3700	6000	1.3	20	1.3	10
978	13	14	4.1	2.5	C002_0031 EZ501U	48	89	3.067	46/15	3700	3700	6000	3.3	20	1.3	11
978	14	15	4.5	2.3	C002_0031 EZ402U	48	89	3.067	46/15	3700	3700	6000	2.0	20	1.3	11
978	21	26	6.7	1.5	C002_0031 EZ404U	60	89	3.067	46/15	3700	3700	6000	3.3	20	1.3	13
978	22	24	7.1	1.4	C002_0031 EZ502U	60	89	3.067	46/15	3700	3700	6000	5.6	20	1.3	13
978	22	25	7.1	1.4	C002_0031 EZ701U	60	89	3.067	46/15	3700	3700	6000	8.9	20	1.3	14
978	29	33	9.4	1.1	C002_0031 EZ503U	60	89	3.067	46/15	3700	3700	6000	7.9	20	1.3	14

n_{2N} [rpm]	M_{2N} [Nm]	$M_{2,0}$ [Nm]	a_{th}	S	Type	M_{2acc} [Nm]	M_{2NOT} [Nm]	i	i_{exakt}	n_{1maxDB} EL1,2,3,4 [rpm]	n_{1maxDB} EL5,6 [rpm]	n_{1maxZB} [rpm]	J_1 [kgcm²]	$\Delta\varphi_2$ [arcmin]	C_2 [Nm/arcmin]	m [kg]
C0 (n_{1N} = 3000 rpm, $M_{2acc,max}$ = 72 Nm)																
1083	7.5	8.1	2.7	4.1	C002_0028 EZ401U	23	81	2.769	36/13	3500	3500	6000	1.4	20	1.3	10
1083	12	13	4.1	2.7	C002_0028 EZ501U	43	81	2.769	36/13	3500	3500	6000	3.3	20	1.3	11
1083	13	14	4.5	2.4	C002_0028 EZ402U	43	81	2.769	36/13	3500	3500	6000	2.1	20	1.3	11
1083	19	23	6.5	1.7	C002_0028 EZ404U	58	81	2.769	36/13	3500	3500	6000	3.4	20	1.3	13
1083	20	21	7.0	1.5	C002_0028 EZ502U	58	81	2.769	36/13	3500	3500	6000	5.6	20	1.3	13
1083	20	22	7.0	1.5	C002_0028 EZ701U	54	81	2.769	36/13	3500	3500	6000	8.9	20	1.3	14
1083	26	30	9.2	1.2	C002_0028 EZ503U	58	81	2.769	36/13	3500	3500	6000	8.0	20	1.3	14
1502	3.1	3.3	3.4	3.8	C002_0020 EZ302U	9.7	15	1.997	1480/741	3500	3500	6000	1.0	20	1.3	8.1
1502	4.0	4.2	4.4	2.9	C002_0020 EZ303U	12	15	1.997	1480/741	3500	3500	6000	1.1	20	1.3	8.6
1502	8.3	9.1	3.9	3.3	C002_0020 EZ501U	31	58	1.997	1480/741	3500	3500	6000	3.6	20	1.3	11
1502	9.1	10	4.2	3.0	C002_0020 EZ402U	31	58	1.997	1480/741	3500	3500	6000	2.4	20	1.3	11
1502	13	17	6.2	2.1	C002_0020 EZ404U	47	58	1.997	1480/741	3500	3500	6000	3.7	20	1.3	13
1502	14	15	6.6	1.9	C002_0020 EZ502U	47	58	1.997	1480/741	3500	3500	6000	5.9	20	1.3	13
1502	14	16	6.6	1.9	C002_0020 EZ701U	39	58	1.997	1480/741	3500	3500	6000	9.2	20	1.3	14
1502	19	22	8.7	1.5	C002_0020 EZ503U	47	58	1.997	1480/741	3500	3500	6000	8.3	20	1.3	14
C0 (n_{1N} = 6000 rpm, $M_{2acc,max}$ = 72 Nm)																
120	43	46	1.8	1.4	C002_0500 EZ301U	72	120	49.94	899/18	4000	4000	7000	0.21	16	1.6	7.5
128	40	43	1.8	1.5	C002_0470 EZ301U	65	120	46.82	7865/168	4000	4000	7000	0.21	16	1.6	7.5
144	36	38	1.7	1.7	C002_0420 EZ301U	72	120	41.77	3509/84	4000	4000	7000	0.21	16	1.6	7.5
171	30	32	1.5	2.0	C002_0350 EZ301U	65	120	35.03	1261/36	4000	4000	7000	0.23	16	1.6	7.5
192	27	29	1.4	2.2	C002_0310 EZ301U	72	120	31.26	2813/90	4000	4000	7000	0.23	16	1.6	7.5
192	45	51	2.4	1.3	C002_0310 EZ302U	72	120	31.26	2813/90	4000	4000	7000	0.33	16	1.6	8.1
214	24	26	1.4	2.5	C002_0280 EZ301U	65	120	27.99	2015/72	4000	4000	7000	0.25	16	1.6	7.5
214	41	46	2.3	1.5	C002_0280 EZ302U	65	120	27.99	2015/72	4000	4000	7000	0.35	16	1.6	8.1
240	22	23	1.3	2.8	C002_0250 EZ301U	68	120	24.97	899/36	4000	4000	7000	0.25	16	1.6	7.5
240	36	41	2.2	1.6	C002_0250 EZ302U	72	120	24.97	899/36	4000	4000	7000	0.35	16	1.6	8.1
240	47	55	2.9	1.3	C002_0250 EZ303U	72	120	24.97	899/36	4000	4000	7000	0.46	16	1.6	8.6
258	20	21	1.3	2.9	C002_0230 EZ301U	63	120	23.21	325/14	4000	4000	7000	0.27	16	1.6	7.5
258	34	38	2.2	1.7	C002_0230 EZ302U	65	120	23.21	325/14	4000	4000	7000	0.37	16	1.6	8.1
290	18	19	1.3	3.1	C002_0210 EZ301U	56	120	20.71	145/7	4000	4000	7000	0.27	16	1.6	7.5
290	30	34	2.1	1.9	C002_0210 EZ302U	72	120	20.71	145/7	4000	4000	7000	0.37	16	1.6	8.1
290	39	45	2.8	1.4	C002_0210 EZ303U	72	120	20.71	145/7	4000	4000	7000	0.48	16	1.6	8.6
342	15	16	1.2	3.5	C002_0175 EZ301U	48	120	17.53	3575/204	4000	4000	6500	0.31	16	1.6	7.5
342	25	29	2.1	2.1	C002_0175 EZ302U	65	120	17.53	3575/204	4000	4000	6500	0.41	16	1.6	8.1
342	33	38	2.7	1.6	C002_0175 EZ303U	65	120	17.53	3575/204	4000	4000	6500	0.52	16	1.6	8.6
342	39	48	3.2	1.4	C002_0175 EZ401U	65	120	17.53	3575/204	4000	4000	6500	1.0	16	1.6	10
384	13	14	1.2	3.8	C002_0155 EZ301U	42	110	15.64	1595/102	4000	4000	6500	0.31	16	1.6	7.5
384	23	25	2.0	2.3	C002_0155 EZ302U	72	110	15.64	1595/102	4000	4000	6500	0.41	16	1.6	8.1
384	30	34	2.6	1.7	C002_0155 EZ303U	72	110	15.64	1595/102	4000	4000	6500	0.52	16	1.6	8.6
384	35	42	3.1	1.5	C002_0155 EZ401U	72	120	15.64	1595/102	4000	4000	6500	1.0	16	1.6	10
426	12	13	1.2	4.1	C002_0140 EZ301U	38	100	14.08	169/12	4000	4000	6500	0.35	16	1.6	7.5
426	20	23	2.0	2.4	C002_0140 EZ302U	65	100	14.08	169/12	4000	4000	6500	0.45	16	1.6	8.1
426	27	31	2.6	1.8	C002_0140 EZ303U	65	100	14.08	169/12	4000	4000	6500	0.56	16	1.6	8.6
426	31	38	3.1	1.6	C002_0140 EZ401U	65	120	14.08	169/12	4000	4000	6500	1.1	16	1.6	10
477	11	12	1.2	4.4	C002_0125 EZ301U	34	91	12.57	377/30	4000	4000	6500	0.35	16	1.6	7.5
477	18	20	2.0	2.6	C002_0125 EZ302U	61	91	12.57	377/30	4000	4000	6500	0.45	16	1.6	8.1
477	24	27	2.5	2.0	C002_0125 EZ303U	72	91	12.57	377/30	4000	4000	6500	0.56	16	1.6	8.6
477	28	34	3.0	1.7	C002_0125 EZ401U	72	120	12.57	377/30	4000	4000	6500	1.1	16	1.6	10
477	41	54	4.4	1.1	C002_0125 EZ501U	72	120	12.57	377/30	4000	4000	6500	3.1	16	1.6	11
520	10	11	1.1	4.6	C002_0115 EZ301U	31	84	11.54	3185/276	3700	3700	6000	0.39	16	1.6	7.5
520	17	19	1.9	2.8	C002_0115 EZ302U	56	84	11.54	3185/276	3700	3700	6000	0.49	16	1.6	8.1
520	22	25	2.5	2.1	C002_0115 EZ303U	65	84	11.54	3185/276	3700	3700	6000	0.60	16	1.6	8.6
520	26	31	2.9	1.8	C002_0115 EZ401U	65	120	11.54	3185/276	3700	3700	6000	1.1	16	1.6	10
520	38	49	4.4	1.2	C002_0115 EZ501U	65	120	11.54	3185/276	3700	3700	6000	3.1	16	1.6	11
583	15	17	1.9	3.0	C002_0105 EZ302U	50	75	10.30	1421/138	3700	3700	6000	0.49	16	1.6	8.1
583	20	22	2.5	2.3	C002_0105 EZ303U	60	75	10.30	1421/138	3700	3700	6000	0.60	16	1.6	8.6
583	23	28	2.9	1.9	C002_0105 EZ401U	72	120	10.30	1421/138	3700	3700	6000	1.1	16	1.6	10
583	34	44	4.3	1.3	C002_0105 EZ501U	72	120	10.30	1421/138	3700	3700	6000	3.1	16	1.6	11
583	35	49	4.4	1.3	C002_0105 EZ402U	72	120	10.30	1421/138	3700	3700	6000	1.8	16	1.6	11
650	13	15	1.9	3.2	C002_0092 EZ302U	45	67	9.228	1495/162	3700	3700	6000	0.56	16	1.6	8.1
650	18	20	2.4	2.4	C002_0092 EZ303U	54	67	9.228	1495/162	3700	3700	6000	0.67	16	1.6	8.6
650	21	25	2.8	2.1	C002_0092 EZ401U	65	120	9.228	1495/162	3700	3700	6000	1.2	16	1.6	10
650	30	39	4.2	1.4	C002_0092 EZ501U	65	120	9.228	1495/162	3700	3700	6000	3.2	16	1.6	11
650	31	44	4.3	1.4	C002_0092 EZ402U	65	120	9.228	1495/162	3700	3700	6000	1.9	16	1.6	11

n_{2N} [rpm]	M_{2N} [Nm]	$M_{2,0}$ [Nm]	a_{th}	S	Type	M_{2acc} [Nm]	M_{2NOT} [Nm]	i	i_{exakt}	n_{1maxDB} EL1,2,3,4 [rpm]	n_{1maxDB} EL5,6 [rpm]	n_{1maxZB} [rpm]	J_1 [kgcm²]	$\Delta\varphi_2$ [arcmin]	C_2 [Nm/arcmin]	m [kg]
C0 (n_{1N} = 6000 rpm, $M_{2acc,max}$ = 72 Nm)																
729	12	13	1.8	3.5	C002_0082 EZ302U	40	60	8.235	667/81	3700	3700	6000	0.56	16	1.6	8.1
729	16	18	2.4	2.6	C002_0082 EZ303U	48	60	8.235	667/81	3700	3700	6000	0.67	16	1.6	8.6
729	18	22	2.8	2.3	C002_0082 EZ401U	68	120	8.235	667/81	3700	3700	6000	1.2	16	1.6	10
729	27	35	4.1	1.5	C002_0082 EZ501U	72	120	8.235	667/81	3700	3700	6000	3.2	16	1.6	11
729	28	39	4.2	1.5	C002_0082 EZ402U	72	120	8.235	667/81	3700	3700	6000	1.9	16	1.6	11
778	11	13	2.1	3.1	C002_0077 EZ302U	37	53	7.714	54/7	4000	4000	7000	0.38	20	1.3	8.1
778	15	17	2.8	2.3	C002_0077 EZ303U	42	53	7.714	54/7	4000	4000	7000	0.49	20	1.3	8.6
778	17	21	3.3	2.0	C002_0077 EZ401U	64	110	7.714	54/7	4000	4000	7000	1.0	20	1.3	10
778	25	33	4.8	1.3	C002_0077 EZ501U	65	110	7.714	54/7	4000	4000	7000	3.0	20	1.3	11
778	26	37	5.0	1.3	C002_0077 EZ402U	65	110	7.714	54/7	4000	4000	7000	1.7	20	1.3	11
952	9.2	10	2.1	3.5	C002_0063 EZ302U	31	46	6.300	2035/323	4000	4000	6500	0.43	20	1.3	8.1
952	12	14	2.7	2.7	C002_0063 EZ303U	37	46	6.300	2035/323	4000	4000	6500	0.54	20	1.3	8.6
952	14	17	3.2	2.3	C002_0063 EZ401U	52	110	6.300	2035/323	4000	4000	6500	1.1	20	1.3	10
952	21	27	4.7	1.5	C002_0063 EZ501U	65	110	6.300	2035/323	4000	4000	6500	3.0	20	1.3	11
952	21	30	4.8	1.5	C002_0063 EZ402U	65	110	6.300	2035/323	4000	4000	6500	1.8	20	1.3	11
952	32	48	7.1	1.0	C002_0063 EZ502U	65	110	6.300	2035/323	4000	4000	6500	5.3	20	1.3	13
952	32	48	7.1	1.0	C002_0063 EZ701U	65	110	6.300	2035/323	4000	4000	6500	8.6	20	1.3	14
1030	8.5	9.5	2.0	3.7	C002_0058 EZ302U	28	42	5.824	99/17	4000	4000	6500	0.43	20	1.3	8.1
1030	11	13	2.7	2.8	C002_0058 EZ303U	34	42	5.824	99/17	4000	4000	6500	0.54	20	1.3	8.6
1030	13	16	3.1	2.4	C002_0058 EZ401U	48	110	5.824	99/17	4000	4000	6500	1.1	20	1.3	10
1030	19	25	4.6	1.6	C002_0058 EZ501U	65	110	5.824	99/17	4000	4000	6500	3.0	20	1.3	11
1030	20	28	4.7	1.6	C002_0058 EZ402U	65	110	5.824	99/17	4000	4000	6500	1.8	20	1.3	11
1030	29	44	7.0	1.1	C002_0058 EZ502U	65	110	5.824	99/17	4000	4000	6500	5.3	20	1.3	13
1030	29	45	7.0	1.1	C002_0058 EZ701U	65	110	5.824	99/17	4000	4000	6500	8.6	20	1.3	14
1185	7.4	8.3	2.0	4.0	C002_0051 EZ302U	25	37	5.063	481/95	4000	4000	6500	0.48	20	1.3	8.1
1185	9.6	11	2.6	3.1	C002_0051 EZ303U	29	37	5.063	481/95	4000	4000	6500	0.59	20	1.3	8.6
1185	11	14	3.0	2.6	C002_0051 EZ401U	42	110	5.063	481/95	4000	4000	6500	1.1	20	1.3	10
1185	17	22	4.5	1.8	C002_0051 EZ501U	65	110	5.063	481/95	4000	4000	6500	3.1	20	1.3	11
1185	17	24	4.6	1.7	C002_0051 EZ402U	65	110	5.063	481/95	4000	4000	6500	1.8	20	1.3	11
1185	26	38	6.9	1.2	C002_0051 EZ502U	65	110	5.063	481/95	4000	4000	6500	5.4	20	1.3	13
1185	26	39	6.9	1.2	C002_0051 EZ701U	65	110	5.063	481/95	4000	4000	6500	8.7	20	1.3	14
1185	28	41	7.7	1.0	C002_0051 EZ404U	65	110	5.063	481/95	4000	4000	6500	3.2	20	1.3	13
1282	6.8	7.6	2.1	4.0	C002_0047 EZ302U	23	34	4.680	117/25	4000	4000	6500	0.49	20	1.3	8.1
1282	8.9	10	2.7	3.1	C002_0047 EZ303U	27	34	4.680	117/25	4000	4000	6500	0.60	20	1.3	8.6
1282	10	13	3.0	2.8	C002_0047 EZ401U	39	110	4.680	117/25	4000	4000	6500	1.1	20	1.3	10
1282	15	20	4.4	1.9	C002_0047 EZ501U	65	110	4.680	117/25	4000	4000	6500	3.1	20	1.3	11
1282	16	22	4.6	1.8	C002_0047 EZ402U	65	110	4.680	117/25	4000	4000	6500	1.8	20	1.3	11
1282	24	35	6.8	1.2	C002_0047 EZ502U	65	110	4.680	117/25	4000	4000	6500	5.4	20	1.3	13
1282	24	36	6.8	1.2	C002_0047 EZ701U	65	110	4.680	117/25	4000	4000	6500	8.7	20	1.3	14
1282	26	38	7.6	1.1	C002_0047 EZ404U	65	110	4.680	117/25	4000	4000	6500	3.2	20	1.3	13
1282	28	48	8.1	1.0	C002_0047 EZ503U	65	110	4.680	117/25	4000	4000	6500	7.8	20	1.3	14
1446	6.0	6.8	2.2	4.0	C002_0041 EZ302U	20	30	4.149	1813/437	3700	3700	6000	0.55	20	1.3	8.1
1446	7.9	9.1	2.9	3.1	C002_0041 EZ303U	24	30	4.149	1813/437	3700	3700	6000	0.66	20	1.3	8.6
1446	9.3	11	2.9	3.0	C002_0041 EZ401U	34	110	4.149	1813/437	3700	3700	6000	1.2	20	1.3	10
1446	14	18	4.3	2.0	C002_0041 EZ501U	64	110	4.149	1813/437	3700	3700	6000	3.2	20	1.3	11
1446	14	20	4.5	2.0	C002_0041 EZ402U	64	110	4.149	1813/437	3700	3700	6000	1.9	20	1.3	11
1446	21	31	6.6	1.3	C002_0041 EZ502U	65	110	4.149	1813/437	3700	3700	6000	5.5	20	1.3	13
1446	21	32	6.6	1.3	C002_0041 EZ701U	65	110	4.149	1813/437	3700	3700	6000	8.8	20	1.3	14
1446	23	34	7.4	1.2	C002_0041 EZ404U	65	110	4.149	1813/437	3700	3700	6000	3.2	20	1.3	13
1446	25	43	7.9	1.1	C002_0041 EZ503U	65	110	4.149	1813/437	3700	3700	6000	7.8	20	1.3	14
1565	5.6	6.3	2.3	4.0	C002_0038 EZ302U	19	28	3.835	441/115	3700	3700	6000	0.55	20	1.3	8.1
1565	7.3	8.4	3.0	3.1	C002_0038 EZ303U	22	28	3.835	441/115	3700	3700	6000	0.66	20	1.3	8.6
1565	8.6	10	2.9	3.2	C002_0038 EZ401U	32	110	3.835	441/115	3700	3700	6000	1.2	20	1.3	10
1565	13	16	4.3	2.1	C002_0038 EZ501U	60	110	3.835	441/115	3700	3700	6000	3.2	20	1.3	11
1565	13	18	4.4	2.1	C002_0038 EZ402U	60	110	3.835	441/115	3700	3700	6000	1.9	20	1.3	11
1565	19	29	6.6	1.4	C002_0038 EZ502U	65	110	3.835	441/115	3700	3700	6000	5.5	20	1.3	13
1565	19	29	6.6	1.4	C002_0038 EZ701U	65	110	3.835	441/115	3700	3700	6000	8.8	20	1.3	14
1565	22	31	7.3	1.3	C002_0038 EZ404U	65	110	3.835	441/115	3700	3700	6000	3.2	20	1.3	13
1565	23	39	7.8	1.2	C002_0038 EZ503U	65	110	3.835	441/115	3700	3700	6000	7.8	20	1.3	14
1808	4.8	5.4	2.5	4.0	C002_0033 EZ302U	16	24	3.318	1702/513	3700	3700	6000	0.65	20	1.3	8.1
1808	6.3	7.2	3.2	3.1	C002_0033 EZ303U	19	24	3.318	1702/513	3700	3700	6000	0.76	20	1.3	8.6
1808	7.4	9.0	2.8	3.5	C002_0033 EZ401U	27	97	3.318	1702/513	3700	3700	6000	1.3	20	1.3	10
1808	11	14	4.2	2.4	C002_0033 EZ501U	51	97	3.318	1702/513	3700	3700	6000	3.3	20	1.3	11
1808	11	16	4.3	2.3	C002_0033 EZ402U	51	97	3.318	1702/513	3700	3700	6000	2.0	20	1.3	11

n_{2N} [rpm]	M_{2N} [Nm]	$M_{2,0}$ [Nm]	a_{th}	S	Type	M_{2acc} [Nm]	M_{2NOT} [Nm]	i	i_{exakt}	n_{1maxDB} EL1,2,3,4 [rpm]	n_{1maxDB} EL5,6 [rpm]	n_{1maxZB} [rpm]	J_1 [kgcm²]	$\Delta\varphi_2$ [arcmin]	C_2 [Nm/arcmin]	m [kg]
C0 (n_{1N} = 6000 rpm, $M_{2acc,max}$ = 72 Nm)																
1808	17	25	6.4	1.5	C002_0033 EZ502U	62	97	3.318	1702/513	3700	3700	6000	5.6	20	1.3	13
1808	17	25	6.4	1.5	C002_0033 EZ701U	62	97	3.318	1702/513	3700	3700	6000	8.9	20	1.3	14
1808	19	27	7.1	1.4	C002_0033 EZ404U	62	97	3.318	1702/513	3700	3700	6000	3.3	20	1.3	13
1808	20	34	7.6	1.3	C002_0033 EZ503U	62	97	3.318	1702/513	3700	3700	6000	7.9	20	1.3	14
1956	4.5	5.0	2.6	4.0	C002_0031 EZ302U	15	22	3.067	46/15	3700	3700	6000	0.66	20	1.3	8.1
1956	5.8	6.7	3.4	3.1	C002_0031 EZ303U	18	22	3.067	46/15	3700	3700	6000	0.77	20	1.3	8.6
1956	6.8	8.3	2.8	3.7	C002_0031 EZ401U	25	89	3.067	46/15	3700	3700	6000	1.3	20	1.3	10
1956	10	13	4.1	2.5	C002_0031 EZ501U	48	89	3.067	46/15	3700	3700	6000	3.3	20	1.3	11
1956	10	15	4.3	2.4	C002_0031 EZ402U	48	89	3.067	46/15	3700	3700	6000	2.0	20	1.3	11
1956	15	23	6.3	1.6	C002_0031 EZ502U	60	89	3.067	46/15	3700	3700	6000	5.6	20	1.3	13
1956	15	24	6.3	1.6	C002_0031 EZ701U	60	89	3.067	46/15	3700	3700	6000	8.9	20	1.3	14
1956	17	25	7.0	1.5	C002_0031 EZ404U	60	89	3.067	46/15	3700	3700	6000	3.3	20	1.3	13
1956	18	32	7.5	1.4	C002_0031 EZ503U	60	89	3.067	46/15	3700	3700	6000	7.9	20	1.3	14
2167	6.2	7.5	2.7	3.9	C002_0028 EZ401U	23	81	2.769	36/13	3500	3500	6000	1.4	20	1.3	10
2167	9.1	12	4.1	2.7	C002_0028 EZ501U	43	81	2.769	36/13	3500	3500	6000	3.3	20	1.3	11
2167	9.4	13	4.2	2.6	C002_0028 EZ402U	43	81	2.769	36/13	3500	3500	6000	2.1	20	1.3	11
2167	14	21	6.2	1.7	C002_0028 EZ502U	58	81	2.769	36/13	3500	3500	6000	5.6	20	1.3	13
2167	14	21	6.2	1.7	C002_0028 EZ701U	54	81	2.769	36/13	3500	3500	6000	8.9	20	1.3	14
2167	16	23	6.9	1.6	C002_0028 EZ404U	58	81	2.769	36/13	3500	3500	6000	3.4	20	1.3	13
2167	17	28	7.4	1.5	C002_0028 EZ503U	58	81	2.769	36/13	3500	3500	6000	8.0	20	1.3	14
3005	2.9	3.3	3.2	4.0	C002_0020 EZ302U	9.7	15	1.997	1480/741	3500	3500	6000	1.0	20	1.3	8.1
3005	3.8	4.4	4.2	3.1	C002_0020 EZ303U	12	15	1.997	1480/741	3500	3500	6000	1.1	20	1.3	8.6
3005	4.5	5.4	2.6	4.9	C002_0020 EZ401U	16	58	1.997	1480/741	3500	3500	6000	1.7	20	1.3	10
3005	6.6	8.5	3.8	3.3	C002_0020 EZ501U	31	58	1.997	1480/741	3500	3500	6000	3.6	20	1.3	11
3005	6.8	9.5	4.0	3.2	C002_0020 EZ402U	31	58	1.997	1480/741	3500	3500	6000	2.4	20	1.3	11
3005	10	15	5.9	2.2	C002_0020 EZ502U	47	58	1.997	1480/741	3500	3500	6000	5.9	20	1.3	13
3005	10	15	5.9	2.2	C002_0020 EZ701U	39	58	1.997	1480/741	3500	3500	6000	9.2	20	1.3	14
3005	11	16	6.6	1.9	C002_0020 EZ404U	47	58	1.997	1480/741	3500	3500	6000	3.7	20	1.3	13
3005	12	21	7.0	1.8	C002_0020 EZ503U	47	58	1.997	1480/741	3500	3500	6000	8.3	20	1.3	14
C1 (n_{1N} = 3000 rpm, $M_{2acc,max}$ = 140 Nm)																
27	99	101	1.6	1.2	C103_1110 EZ301U	140	240	111.1	1222/11	4000	4000	6500	0.25	15	3.9	15
33	82	84	1.4	1.5	C103_0920 EZ301U	140	240	92.13	16215/176	4000	4000	6500	0.25	15	3.9	15
37	73	74	1.3	1.7	C103_0820 EZ301U	140	240	81.64	31349/384	4000	4000	6500	0.25	15	3.9	15
43	64	65	1.3	1.9	C102_0700 EZ301U	140	240	70.46	775/11	4000	4000	6500	0.22	15	3.9	12
48	56	58	1.2	2.1	C102_0620 EZ301U	140	230	62.43	4495/72	4000	4000	6500	0.22	15	3.9	12
48	96	102	2.0	1.2	C102_0620 EZ302U	140	230	62.43	4495/72	4000	4000	6500	0.32	15	3.9	13
53	51	52	1.1	2.4	C102_0560 EZ301U	140	240	56.36	620/11	4000	4000	6500	0.24	15	3.9	12
53	87	92	1.9	1.4	C102_0560 EZ302U	140	240	56.36	620/11	4000	4000	6500	0.34	15	3.9	13
60	45	46	1.1	2.7	C102_0500 EZ301U	140	240	49.94	899/18	4000	4000	6500	0.24	15	3.9	12
60	77	81	1.8	1.6	C102_0500 EZ302U	140	240	49.94	899/18	4000	4000	6500	0.34	15	3.9	13
60	100	106	2.4	1.2	C102_0500 EZ303U	140	240	49.94	899/18	4000	4000	6500	0.45	15	3.9	14
64	42	43	1.0	2.8	C102_0470 EZ301U	130	240	46.91	516/11	4000	4000	6500	0.26	15	3.9	12
64	72	76	1.8	1.7	C102_0470 EZ302U	140	240	46.91	516/11	4000	4000	6500	0.36	15	3.9	13
64	94	100	2.3	1.3	C102_0470 EZ303U	140	240	46.91	516/11	4000	4000	6500	0.47	15	3.9	14
72	37	38	1.0	3.2	C102_0420 EZ301U	110	230	41.57	1247/30	4000	4000	6500	0.26	15	3.9	12
72	64	68	1.7	1.9	C102_0420 EZ302U	140	230	41.57	1247/30	4000	4000	6500	0.36	15	3.9	13
72	83	88	2.2	1.4	C102_0420 EZ303U	140	230	41.57	1247/30	4000	4000	6500	0.47	15	3.9	14
86	32	32	0.9	3.8	C102_0350 EZ301U	95	220	35.07	2700/77	4000	4000	6500	0.30	15	3.9	12
86	54	57	1.5	2.2	C102_0350 EZ302U	140	220	35.07	2700/77	4000	4000	6500	0.40	15	3.9	13
86	70	74	2.0	1.7	C102_0350 EZ303U	140	220	35.07	2700/77	4000	4000	6500	0.51	15	3.9	14
86	95	102	2.7	1.3	C102_0350 EZ401U	140	240	35.07	2700/77	4000	4000	6500	1.0	15	3.9	15
97	28	29	0.8	4.3	C102_0310 EZ301U	84	190	31.07	435/14	4000	4000	6500	0.30	15	3.9	12
97	48	51	1.4	2.5	C102_0310 EZ302U	140	190	31.07	435/14	4000	4000	6500	0.40	15	3.9	13
97	62	66	1.9	1.9	C102_0310 EZ303U	140	190	31.07	435/14	4000	4000	6500	0.51	15	3.9	14
97	84	90	2.5	1.4	C102_0310 EZ401U	140	240	31.07	435/14	4000	4000	6500	1.0	15	3.9	15
106	77	83	2.4	1.6	C102_0280 EZ401U	140	240	28.36	312/11	4000	4000	6500	1.1	15	3.9	15
119	68	73	2.3	1.8	C102_0250 EZ401U	140	240	25.13	377/15	4000	4000	6500	1.1	15	3.9	15
128	36	38	1.2	3.3	C102_0240 EZ302U	110	170	23.52	1035/44	4000	4000	6500	0.49	15	3.9	13
128	47	50	1.6	2.5	C102_0240 EZ303U	140	170	23.52	1035/44	4000	4000	6500	0.60	15	3.9	14
128	64	68	2.2	1.9	C102_0240 EZ401U	140	240	23.52	1035/44	4000	4000	6500	1.1	15	3.9	15
144	32	34	1.2	3.7	C102_0210 EZ302U	100	150	20.84	667/32	4000	4000	6500	0.49	15	3.9	13
144	42	44	1.5	2.9	C102_0210 EZ303U	120	150	20.84	667/32	4000	4000	6500	0.60	15	3.9	14
144	57	61	2.1	2.1	C102_0210 EZ401U	140	240	20.84	667/32	4000	4000	6500	1.1	15	3.9	15
144	87	95	3.2	1.4	C102_0210 EZ501U	140	240	20.84	667/32	4000	4000	6500	3.1	15	3.9	16

n_{2N} [rpm]	M_{2N} [Nm]	$M_{2,0}$ [Nm]	a_{th}	S	Type	M_{2acc} [Nm]	M_{2NOT} [Nm]	i	i_{exakt}	n_{1maxDB} EL1,2,3,4 [rpm]	n_{1maxDB} EL5,6 [rpm]	n_{1maxZB} [rpm]	J_1 [kgcm²]	$\Delta\varphi_2$ [arcmin]	C_2 [Nm/arcmin]	m [kg]
C1 (n_{1N} = 3000 rpm, $M_{2acc,max}$ = 140 Nm)																
144	95	105	3.5	1.3	C102_0210 EZ402U	140	240	20.84	667/32	4000	4000	6500	1.8	15	3.9	16
169	27	29	1.3	3.8	C102_0175 EZ302U	86	130	17.73	195/11	3800	3800	6000	0.59	15	3.9	13
169	36	38	1.6	2.9	C102_0175 EZ303U	100	130	17.73	195/11	3800	3800	6000	0.70	15	3.9	14
169	48	52	1.9	2.5	C102_0175 EZ401U	140	240	17.73	195/11	3800	3800	6000	1.2	15	3.9	15
169	74	81	2.9	1.6	C102_0175 EZ501U	140	240	17.73	195/11	3800	3800	6000	3.2	15	3.9	16
169	81	89	3.2	1.5	C102_0175 EZ402U	140	240	17.73	195/11	3800	3800	6000	1.9	15	3.9	16
191	24	26	1.3	3.8	C102_0155 EZ302U	76	110	15.71	377/24	3800	3800	6000	0.60	15	3.9	13
191	32	33	1.7	2.9	C102_0155 EZ303U	91	110	15.71	377/24	3800	3800	6000	0.71	15	3.9	14
191	43	46	1.8	2.8	C102_0155 EZ401U	130	240	15.71	377/24	3800	3800	6000	1.2	15	3.9	15
191	66	72	2.8	1.8	C102_0155 EZ501U	140	240	15.71	377/24	3800	3800	6000	3.2	15	3.9	16
191	72	79	3.0	1.7	C102_0155 EZ402U	140	240	15.71	377/24	3800	3800	6000	1.9	15	3.9	16
213	38	41	1.7	3.1	C102_0140 EZ401U	120	240	14.06	2010/143	3800	3800	6000	1.3	15	3.9	15
213	59	64	2.6	2.0	C102_0140 EZ501U	140	240	14.06	2010/143	3800	3800	6000	3.3	15	3.9	16
213	64	71	2.8	1.9	C102_0140 EZ402U	140	240	14.06	2010/143	3800	3800	6000	2.0	15	3.9	16
241	34	36	1.6	3.5	C102_0125 EZ401U	100	240	12.46	1943/156	3800	3800	6000	1.3	15	3.9	15
241	52	57	2.5	2.3	C102_0125 EZ501U	140	240	12.46	1943/156	3800	3800	6000	3.3	15	3.9	16
241	57	63	2.7	2.1	C102_0125 EZ402U	140	240	12.46	1943/156	3800	3800	6000	2.0	15	3.9	16
241	83	104	4.0	1.4	C102_0125 EZ404U	140	240	12.46	1943/156	3800	3800	6000	3.4	15	3.9	18
241	89	97	4.2	1.3	C102_0125 EZ502U	140	240	12.46	1943/156	3800	3800	6000	5.6	15	3.9	17
241	89	100	4.2	1.3	C102_0125 EZ701U	140	240	12.46	1943/156	3800	3800	6000	8.9	15	3.9	19
256	18	19	1.5	3.8	C102_0115 EZ302U	57	85	11.72	1160/99	3600	3600	6000	0.82	15	3.9	13
256	24	25	2.0	2.9	C102_0115 EZ303U	68	85	11.72	1160/99	3600	3600	6000	0.93	15	3.9	14
256	32	34	1.6	3.7	C102_0115 EZ401U	97	240	11.72	1160/99	3600	3600	6000	1.5	15	3.9	15
256	49	53	2.4	2.4	C102_0115 EZ501U	140	240	11.72	1160/99	3600	3600	6000	3.4	15	3.9	16
256	53	59	2.7	2.2	C102_0115 EZ402U	140	240	11.72	1160/99	3600	3600	6000	2.2	15	3.9	16
256	78	98	3.9	1.5	C102_0115 EZ404U	140	240	11.72	1160/99	3600	3600	6000	3.5	15	3.9	18
256	84	91	4.2	1.4	C102_0115 EZ502U	140	240	11.72	1160/99	3600	3600	6000	5.7	15	3.9	17
256	84	94	4.2	1.4	C102_0115 EZ701U	140	240	11.72	1160/99	3600	3600	6000	9.0	15	3.9	19
289	16	17	1.6	3.8	C102_0105 EZ302U	50	76	10.38	841/81	3600	3600	6000	0.83	15	3.9	13
289	21	22	2.1	2.9	C102_0105 EZ303U	60	76	10.38	841/81	3600	3600	6000	0.94	15	3.9	14
289	28	30	1.6	4.0	C102_0105 EZ401U	86	240	10.38	841/81	3600	3600	6000	1.5	15	3.9	15
289	43	47	2.4	2.6	C102_0105 EZ501U	140	240	10.38	841/81	3600	3600	6000	3.4	15	3.9	16
289	47	52	2.6	2.4	C102_0105 EZ402U	140	240	10.38	841/81	3600	3600	6000	2.2	15	3.9	16
289	69	87	3.8	1.6	C102_0105 EZ404U	140	240	10.38	841/81	3600	3600	6000	3.5	15	3.9	18
289	75	81	4.1	1.5	C102_0105 EZ502U	140	240	10.38	841/81	3600	3600	6000	5.7	15	3.9	17
289	75	84	4.1	1.5	C102_0105 EZ701U	140	240	10.38	841/81	3600	3600	6000	9.0	15	3.9	19
322	25	27	1.5	4.3	C102_0093 EZ401U	77	240	9.326	3180/341	3600	3600	6000	1.6	15	3.9	15
322	39	43	2.3	2.8	C102_0093 EZ501U	140	240	9.326	3180/341	3600	3600	6000	3.6	15	3.9	16
322	43	47	2.6	2.6	C102_0093 EZ402U	140	240	9.326	3180/341	3600	3600	6000	2.3	15	3.9	16
322	62	78	3.8	1.7	C102_0093 EZ404U	140	240	9.326	3180/341	3600	3600	6000	3.7	15	3.9	18
322	67	72	4.0	1.6	C102_0093 EZ502U	140	240	9.326	3180/341	3600	3600	6000	5.9	15	3.9	17
322	67	75	4.0	1.6	C102_0093 EZ701U	140	240	9.326	3180/341	3600	3600	6000	9.2	15	3.9	19
322	88	100	5.3	1.2	C102_0093 EZ503U	140	240	9.326	3180/341	3600	3600	6000	8.3	15	3.9	19
363	22	24	1.5	4.6	C102_0083 EZ401U	68	240	8.263	1537/186	3600	3600	6000	1.7	15	3.9	15
363	34	38	2.3	3.0	C102_0083 EZ501U	130	240	8.263	1537/186	3600	3600	6000	3.6	15	3.9	16
363	38	42	2.5	2.8	C102_0083 EZ402U	130	240	8.263	1537/186	3600	3600	6000	2.4	15	3.9	16
363	55	69	3.7	1.9	C102_0083 EZ404U	140	240	8.263	1537/186	3600	3600	6000	3.7	15	3.9	18
363	59	64	4.0	1.8	C102_0083 EZ502U	140	240	8.263	1537/186	3600	3600	6000	5.9	15	3.9	17
363	59	67	4.0	1.8	C102_0083 EZ701U	140	240	8.263	1537/186	3600	3600	6000	9.2	15	3.9	19
363	78	89	5.2	1.3	C102_0083 EZ503U	140	240	8.263	1537/186	3600	3600	6000	8.3	15	3.9	19
385	12	13	1.9	3.8	C102_0078 EZ302U	38	57	7.796	3243/416	4000	4000	6500	0.54	18	3.1	13
385	16	17	2.5	2.9	C102_0078 EZ303U	45	57	7.796	3243/416	4000	4000	6500	0.65	18	3.1	14
385	21	23	1.8	4.1	C102_0078 EZ401U	64	210	7.796	3243/416	4000	4000	6500	1.2	18	3.1	15
385	33	36	2.7	2.7	C102_0078 EZ501U	120	210	7.796	3243/416	4000	4000	6500	3.1	18	3.1	16
385	36	39	2.9	2.4	C102_0078 EZ402U	120	210	7.796	3243/416	4000	4000	6500	1.9	18	3.1	16
385	52	65	4.3	1.7	C102_0078 EZ404U	130	210	7.796	3243/416	4000	4000	6500	3.2	18	3.1	18
385	56	60	4.6	1.5	C102_0078 EZ502U	130	210	7.796	3243/416	4000	4000	6500	5.4	18	3.1	17
385	56	63	4.6	1.5	C102_0078 EZ701U	130	220	7.796	3243/416	4000	4000	6500	8.7	18	3.1	19
385	73	84	6.1	1.2	C102_0078 EZ503U	130	210	7.796	3243/416	4000	4000	6500	7.8	18	3.1	19
473	9.8	10	2.1	3.8	C102_0063 EZ302U	31	46	6.338	507/80	3800	3800	6000	0.67	18	3.1	13
473	13	13	2.7	2.9	C102_0063 EZ303U	37	46	6.338	507/80	3800	3800	6000	0.78	18	3.1	14
473	17	18	1.7	4.7	C102_0063 EZ401U	52	180	6.338	507/80	3800	3800	6000	1.3	18	3.1	15
473	26	29	2.6	3.1	C102_0063 EZ501U	98	180	6.338	507/80	3800	3800	6000	3.3	18	3.1	16
473	29	32	2.8	2.8	C102_0063 EZ402U	98	180	6.338	507/80	3800	3800	6000	2.0	18	3.1	16

n_{2N} [rpm]	M_{2N} [Nm]	$M_{2,0}$ [Nm]	a_{th}	S	Type	M_{2acc} [Nm]	M_{2NOT} [Nm]	i	i_{exakt}	n_{1maxDB} EL1,2,3,4 [rpm]	n_{1maxDB} EL5,6 [rpm]	n_{1maxZB} [rpm]	J_1 [kgcm²]	$\Delta\varphi_2$ [arcmin]	C_2 [Nm/arcmin]	m [kg]
C1 (n_{1N} = 3000 rpm, $M_{2acc,max}$ = 140 Nm)																
473	42	53	4.2	1.9	C102_0063 EZ404U	130	180	6.338	507/80	3800	3800	6000	3.4	18	3.1	18
473	45	49	4.5	1.8	C102_0063 EZ502U	130	180	6.338	507/80	3800	3800	6000	5.6	18	3.1	17
473	45	51	4.5	1.8	C102_0063 EZ701U	120	220	6.338	507/80	3800	3800	6000	8.9	18	3.1	19
473	60	68	5.9	1.4	C102_0063 EZ503U	130	180	6.338	507/80	3800	3800	6000	8.0	18	3.1	19
473	74	89	7.3	1.1	C102_0063 EZ702U	130	220	6.338	507/80	3800	3800	6000	14	18	3.1	22
511	9.1	9.6	2.2	3.8	C102_0059 EZ302U	28	43	5.875	47/8	3800	3800	6000	0.67	18	3.1	13
511	12	12	2.8	2.9	C102_0059 EZ303U	34	43	5.875	47/8	3800	3800	6000	0.78	18	3.1	14
511	16	17	1.7	4.9	C102_0059 EZ401U	48	170	5.875	47/8	3800	3800	6000	1.3	18	3.1	15
511	25	27	2.6	3.2	C102_0059 EZ501U	91	170	5.875	47/8	3800	3800	6000	3.3	18	3.1	16
511	27	30	2.8	2.9	C102_0059 EZ402U	91	170	5.875	47/8	3800	3800	6000	2.0	18	3.1	16
511	39	49	4.1	2.0	C102_0059 EZ404U	130	170	5.875	47/8	3800	3800	6000	3.4	18	3.1	18
511	42	46	4.4	1.9	C102_0059 EZ502U	130	170	5.875	47/8	3800	3800	6000	5.6	18	3.1	17
511	42	47	4.4	1.9	C102_0059 EZ701U	110	220	5.875	47/8	3800	3800	6000	8.9	18	3.1	19
511	55	63	5.8	1.4	C102_0059 EZ503U	130	170	5.875	47/8	3800	3800	6000	8.0	18	3.1	19
511	68	82	7.2	1.2	C102_0059 EZ702U	130	220	5.875	47/8	3800	3800	6000	14	18	3.1	22
511	77	91	8.1	1.0	C102_0059 EZ505U	130	220	5.875	47/8	3800	3800	6000	13	18	3.1	22
597	21	23	2.5	3.6	C102_0050 EZ501U	78	150	5.025	201/40	3800	3800	6000	3.4	18	3.1	16
597	23	25	2.7	3.3	C102_0050 EZ402U	78	150	5.025	201/40	3800	3800	6000	2.2	18	3.1	16
597	34	42	4.0	2.2	C102_0050 EZ404U	120	150	5.025	201/40	3800	3800	6000	3.5	18	3.1	18
597	36	39	4.3	2.1	C102_0050 EZ502U	120	150	5.025	201/40	3800	3800	6000	5.7	18	3.1	17
597	36	40	4.3	2.1	C102_0050 EZ701U	97	220	5.025	201/40	3800	3800	6000	9.0	18	3.1	19
597	47	54	5.6	1.6	C102_0050 EZ503U	120	150	5.025	201/40	3800	3800	6000	8.1	18	3.1	19
597	58	70	7.0	1.3	C102_0050 EZ702U	130	220	5.025	201/40	3800	3800	6000	14	18	3.1	22
597	66	78	7.9	1.1	C102_0050 EZ505U	130	220	5.025	201/40	3800	3800	6000	13	18	3.1	22
644	19	21	2.5	3.8	C102_0047 EZ501U	72	140	4.658	3149/676	3800	3800	6000	3.4	18	3.1	16
644	21	23	2.7	3.4	C102_0047 EZ402U	72	140	4.658	3149/676	3800	3800	6000	2.2	18	3.1	16
644	31	39	4.0	2.3	C102_0047 EZ404U	110	140	4.658	3149/676	3800	3800	6000	3.5	18	3.1	18
644	33	36	4.3	2.2	C102_0047 EZ502U	110	140	4.658	3149/676	3800	3800	6000	5.7	18	3.1	17
644	33	38	4.3	2.2	C102_0047 EZ701U	90	220	4.658	3149/676	3800	3800	6000	9.0	18	3.1	19
644	44	50	5.6	1.7	C102_0047 EZ503U	110	140	4.658	3149/676	3800	3800	6000	8.1	18	3.1	19
644	54	65	6.9	1.3	C102_0047 EZ702U	130	220	4.658	3149/676	3800	3800	6000	14	18	3.1	22
644	61	72	7.8	1.2	C102_0047 EZ505U	130	220	4.658	3149/676	3800	3800	6000	13	18	3.1	22
716	6.5	6.8	2.6	3.8	C102_0042 EZ302U	20	30	4.189	377/90	3600	3600	6000	0.99	18	3.1	13
716	8.4	8.9	3.4	2.9	C102_0042 EZ303U	24	30	4.189	377/90	3600	3600	6000	1.1	18	3.1	14
716	17	19	2.4	4.0	C102_0042 EZ501U	65	120	4.189	377/90	3600	3600	6000	3.6	18	3.1	16
716	19	21	2.7	3.7	C102_0042 EZ402U	65	120	4.189	377/90	3600	3600	6000	2.3	18	3.1	16
716	28	35	3.9	2.5	C102_0042 EZ404U	98	120	4.189	377/90	3600	3600	6000	3.7	18	3.1	18
716	30	33	4.2	2.3	C102_0042 EZ502U	98	120	4.189	377/90	3600	3600	6000	5.9	18	3.1	17
716	30	34	4.2	2.3	C102_0042 EZ701U	81	220	4.189	377/90	3600	3600	6000	9.2	18	3.1	19
716	39	45	5.5	1.8	C102_0042 EZ503U	98	120	4.189	377/90	3600	3600	6000	8.3	18	3.1	19
716	49	59	6.8	1.4	C102_0042 EZ702U	130	220	4.189	377/90	3600	3600	6000	14	18	3.1	22
716	55	65	7.6	1.3	C102_0042 EZ505U	130	220	4.189	377/90	3600	3600	6000	13	18	3.1	22
716	67	85	9.3	1.1	C102_0042 EZ703U	130	220	4.189	377/90	3600	3600	6000	22	18	3.1	24
773	6.0	6.3	2.7	3.8	C102_0039 EZ302U	19	28	3.883	1363/351	3600	3600	6000	1.0	18	3.1	13
773	7.8	8.2	3.5	2.9	C102_0039 EZ303U	23	28	3.883	1363/351	3600	3600	6000	1.1	18	3.1	14
773	16	18	2.4	4.2	C102_0039 EZ501U	60	110	3.883	1363/351	3600	3600	6000	3.6	18	3.1	16
773	18	20	2.6	3.9	C102_0039 EZ402U	60	110	3.883	1363/351	3600	3600	6000	2.3	18	3.1	16
773	26	32	3.8	2.6	C102_0039 EZ404U	90	110	3.883	1363/351	3600	3600	6000	3.7	18	3.1	18
773	28	30	4.1	2.5	C102_0039 EZ502U	90	110	3.883	1363/351	3600	3600	6000	5.9	18	3.1	17
773	28	31	4.1	2.5	C102_0039 EZ701U	75	220	3.883	1363/351	3600	3600	6000	9.2	18	3.1	19
773	37	42	5.4	1.9	C102_0039 EZ503U	90	110	3.883	1363/351	3600	3600	6000	8.3	18	3.1	19
773	45	54	6.7	1.5	C102_0039 EZ702U	130	220	3.883	1363/351	3600	3600	6000	14	18	3.1	22
773	51	60	7.5	1.3	C102_0039 EZ505U	130	220	3.883	1363/351	3600	3600	6000	13	18	3.1	22
773	62	78	9.2	1.1	C102_0039 EZ703U	130	220	3.883	1363/351	3600	3600	6000	22	18	3.1	24
900	14	15	2.3	4.7	C102_0033 EZ501U	52	97	3.334	2067/620	3600	3600	6000	3.9	18	3.1	16
900	15	17	2.6	4.3	C102_0033 EZ402U	52	97	3.334	2067/620	3600	3600	6000	2.6	18	3.1	16
900	22	28	3.7	2.9	C102_0033 EZ404U	78	97	3.334	2067/620	3600	3600	6000	4.0	18	3.1	18
900	24	26	4.0	2.7	C102_0033 EZ502U	78	97	3.334	2067/620	3600	3600	6000	6.2	18	3.1	17
900	24	27	4.0	2.7	C102_0033 EZ701U	65	220	3.334	2067/620	3600	3600	6000	9.5	18	3.1	19
900	31	36	5.3	2.1	C102_0033 EZ503U	78	97	3.334	2067/620	3600	3600	6000	8.6	18	3.1	19
900	39	47	6.5	1.7	C102_0033 EZ702U	120	220	3.334	2067/620	3600	3600	6000	15	18	3.1	22
900	44	52	7.3	1.5	C102_0033 EZ505U	120	220	3.334	2067/620	3600	3600	6000	13	18	3.1	22
900	53	67	9.0	1.2	C102_0033 EZ703U	120	220	3.334	2067/620	3600	3600	6000	23	18	3.1	24
971	13	14	2.3	4.9	C102_0031 EZ501U	48	90	3.091	2491/806	3600	3600	6000	3.9	18	3.1	16

n_{2N} [rpm]	M_{2N} [Nm]	$M_{2,0}$ [Nm]	a_{th}	S	Type	M_{2acc} [Nm]	M_{2NOT} [Nm]	i	i_{exakt}	n_{1maxDB} EL1,2,3,4 [rpm]	n_{1maxDB} EL5,6 [rpm]	n_{1maxZB} [rpm]	J_1 [kgcm²]	$\Delta\varphi_2$ [arcmin]	C_2 [Nm/arcmin]	m [kg]
C1 (n_{1N} = 3000 rpm, $M_{2acc,max}$ = 140 Nm)																
971	14	16	2.5	4.5	C102_0031 EZ402U	48	90	3.091	2491/806	3600	3600	6000	2.6	18	3.1	16
971	21	26	3.7	3.1	C102_0031 EZ404U	72	90	3.091	2491/806	3600	3600	6000	4.0	18	3.1	18
971	22	24	4.0	2.9	C102_0031 EZ502U	72	90	3.091	2491/806	3600	3600	6000	6.2	18	3.1	17
971	22	25	4.0	2.9	C102_0031 EZ701U	60	220	3.091	2491/806	3600	3600	6000	9.5	18	3.1	19
971	29	33	5.2	2.2	C102_0031 EZ503U	72	90	3.091	2491/806	3600	3600	6000	8.6	18	3.1	19
971	36	43	6.4	1.8	C102_0031 EZ702U	120	220	3.091	2491/806	3600	3600	6000	15	18	3.1	22
971	40	48	7.2	1.6	C102_0031 EZ505U	120	220	3.091	2491/806	3600	3600	6000	13	18	3.1	22
971	49	62	8.9	1.3	C102_0031 EZ703U	120	220	3.091	2491/806	3600	3600	6000	23	18	3.1	24
1162	19	21	3.9	3.2	C102_0026 EZ701U	50	190	2.582	1911/740	3100	3100	5000	10	18	3.1	19
1162	30	36	6.2	2.0	C102_0026 EZ702U	100	190	2.582	1911/740	3100	3100	5000	15	18	3.1	22
1162	34	40	7.0	1.8	C102_0026 EZ505U	110	190	2.582	1911/740	3100	3100	5000	14	18	3.1	22
1162	41	52	8.6	1.4	C102_0026 EZ703U	110	190	2.582	1911/740	3100	3100	5000	23	18	3.1	24
1253	17	19	3.8	3.4	C102_0024 EZ701U	46	170	2.394	2303/962	3100	3100	5000	10	18	3.1	19
1253	28	33	6.2	2.1	C102_0024 EZ702U	95	170	2.394	2303/962	3100	3100	5000	15	18	3.1	22
1253	31	37	6.9	1.9	C102_0024 EZ505U	110	170	2.394	2303/962	3100	3100	5000	14	18	3.1	22
1253	38	48	8.5	1.5	C102_0024 EZ703U	110	170	2.394	2303/962	3100	3100	5000	23	18	3.1	24
1378	15	18	3.9	3.5	C102_0022 EZ404U	51	63	2.177	468/215	3100	3100	5000	4.8	18	3.1	18
1378	16	17	4.2	3.2	C102_0022 EZ502U	51	63	2.177	468/215	3100	3100	5000	7.0	18	3.1	17
1378	16	18	3.7	3.6	C102_0022 EZ701U	42	160	2.177	468/215	3100	3100	5000	10	18	3.1	19
1378	20	23	5.5	2.5	C102_0022 EZ503U	51	63	2.177	468/215	3100	3100	5000	9.4	18	3.1	19
1378	25	30	6.1	2.2	C102_0022 EZ702U	87	160	2.177	468/215	3100	3100	5000	16	18	3.1	22
1378	29	34	6.8	2.0	C102_0022 EZ505U	110	160	2.177	468/215	3100	3100	5000	14	18	3.1	22
1378	35	44	8.3	1.6	C102_0022 EZ703U	110	160	2.177	468/215	3100	3100	5000	23	18	3.1	24
1487	14	17	4.0	3.5	C102_0020 EZ404U	47	59	2.018	1128/559	3100	3100	5000	4.9	18	3.1	18
1487	14	16	4.3	3.2	C102_0020 EZ502U	47	59	2.018	1128/559	3100	3100	5000	7.1	18	3.1	17
1487	14	16	3.7	3.8	C102_0020 EZ701U	39	150	2.018	1128/559	3100	3100	5000	10	18	3.1	19
1487	19	22	5.7	2.5	C102_0020 EZ503U	47	59	2.018	1128/559	3100	3100	5000	9.5	18	3.1	19
1487	23	28	6.0	2.3	C102_0020 EZ702U	80	150	2.018	1128/559	3100	3100	5000	16	18	3.1	22
1487	26	31	6.7	2.1	C102_0020 EZ505U	100	150	2.018	1128/559	3100	3100	5000	14	18	3.1	22
1487	32	41	8.2	1.7	C102_0020 EZ703U	100	150	2.018	1128/559	3100	3100	5000	24	18	3.1	24
C1 (n_{1N} = 4500 rpm, $M_{2acc,max}$ = 130 Nm)																
710	58	94	6.6	1.2	C102_0063 EZ505U	130	220	6.338	507/80	3800	3800	6000	13	18	3.1	22
766	54	87	6.5	1.3	C102_0059 EZ505U	130	220	5.875	47/8	3800	3800	6000	13	18	3.1	22
896	46	75	6.3	1.4	C102_0050 EZ505U	130	220	5.025	201/40	3800	3800	6000	13	18	3.1	22
896	59	97	8.1	1.1	C102_0050 EZ703U	130	220	5.025	201/40	3800	3800	6000	22	18	3.1	24
966	43	69	6.2	1.5	C102_0047 EZ505U	130	220	4.658	3149/676	3800	3800	6000	13	18	3.1	22
966	55	90	8.0	1.2	C102_0047 EZ703U	130	220	4.658	3149/676	3800	3800	6000	22	18	3.1	24
1074	39	62	6.1	1.6	C102_0042 EZ505U	130	220	4.189	377/90	3600	3600	6000	13	18	3.1	22
1074	49	81	7.8	1.3	C102_0042 EZ703U	130	220	4.189	377/90	3600	3600	6000	22	18	3.1	24
1159	36	58	6.1	1.7	C102_0039 EZ505U	130	220	3.883	1363/351	3600	3600	6000	13	18	3.1	22
1159	46	75	7.7	1.3	C102_0039 EZ703U	130	220	3.883	1363/351	3600	3600	6000	22	18	3.1	24
1350	31	49	5.9	1.9	C102_0033 EZ505U	120	220	3.334	2067/620	3600	3600	6000	13	18	3.1	22
1350	39	65	7.5	1.5	C102_0033 EZ703U	120	220	3.334	2067/620	3600	3600	6000	23	18	3.1	24
1456	28	46	5.8	2.0	C102_0031 EZ505U	120	220	3.091	2491/806	3600	3600	6000	13	18	3.1	22
1456	36	60	7.4	1.5	C102_0031 EZ703U	120	220	3.091	2491/806	3600	3600	6000	23	18	3.1	24
1743	24	38	5.7	2.2	C102_0026 EZ505U	110	190	2.582	1911/740	3100	3100	5000	14	18	3.1	22
1743	30	50	7.2	1.7	C102_0026 EZ703U	110	190	2.582	1911/740	3100	3100	5000	23	18	3.1	24
1880	22	36	5.6	2.3	C102_0024 EZ505U	110	170	2.394	2303/962	3100	3100	5000	14	18	3.1	22
1880	28	46	7.1	1.8	C102_0024 EZ703U	110	170	2.394	2303/962	3100	3100	5000	23	18	3.1	24
2067	20	32	5.5	2.5	C102_0022 EZ505U	110	160	2.177	468/215	3100	3100	5000	14	18	3.1	22
2067	26	42	7.0	1.9	C102_0022 EZ703U	110	160	2.177	468/215	3100	3100	5000	23	18	3.1	24
2230	19	30	5.4	2.6	C102_0020 EZ505U	100	150	2.018	1128/559	3100	3100	5000	14	18	3.1	22
2230	24	39	6.9	2.0	C102_0020 EZ703U	100	150	2.018	1128/559	3100	3100	5000	24	18	3.1	24
C1 (n_{1N} = 6000 rpm, $M_{2acc,max}$ = 140 Nm)																
54	95	101	1.5	1.3	C103_1110 EZ301U	140	240	111.1	1222/11	4000	4000	6500	0.25	15	3.9	15
65	78	84	1.4	1.5	C103_0920 EZ301U	140	240	92.13	16215/176	4000	4000	6500	0.25	15	3.9	15
73	69	74	1.3	1.7	C103_0820 EZ301U	140	240	81.64	31349/384	4000	4000	6500	0.25	15	3.9	15
85	61	65	1.2	2.0	C102_0700 EZ301U	140	240	70.46	775/11	4000	4000	6500	0.22	15	3.9	12
96	54	58	1.1	2.2	C102_0620 EZ301U	140	230	62.43	4495/72	4000	4000	6500	0.22	15	3.9	12
96	91	102	1.9	1.3	C102_0620 EZ302U	140	230	62.43	4495/72	4000	4000	6500	0.32	15	3.9	13
106	49	52	1.1	2.5	C102_0560 EZ301U	140	240	56.36	620/11	4000	4000	6500	0.24	15	3.9	12
106	82	92	1.8	1.5	C102_0560 EZ302U	140	240	56.36	620/11	4000	4000	6500	0.34	15	3.9	13
120	43	46	1.0	2.8	C102_0500 EZ301U	140	240	49.94	899/18	4000	4000	6500	0.24	15	3.9	12
120	73	81	1.7	1.7	C102_0500 EZ302U	140	240	49.94	899/18	4000	4000	6500	0.34	15	3.9	13

n_{2N} [rpm]	M_{2N} [Nm]	$M_{2,0}$ [Nm]	a_{th}	S	Type	M_{2acc} [Nm]	M_{2NOT} [Nm]	i	i_{exakt}	n_{1maxDB} EL1,2,3,4 [rpm]	n_{1maxDB} EL5,6 [rpm]	n_{1maxZB} [rpm]	J_1 [kgcm²]	$\Delta\varphi_2$ [arcmin]	C_2 [Nm/arcmin]	m [kg]
C1 (n_{1N} = 6000 rpm, $M_{2acc,max}$ = 140 Nm)																
128	40	43	1.0	3.0	C102_0470 EZ301U	130	240	46.91	516/11	4000	4000	6500	0.26	15	3.9	12
128	68	76	1.7	1.8	C102_0470 EZ302U	140	240	46.91	516/11	4000	4000	6500	0.36	15	3.9	13
128	89	102	2.2	1.3	C102_0470 EZ303U	140	240	46.91	516/11	4000	4000	6500	0.47	15	3.9	14
144	36	38	0.9	3.3	C102_0420 EZ301U	110	230	41.57	1247/30	4000	4000	6500	0.26	15	3.9	12
144	60	68	1.6	2.0	C102_0420 EZ302U	140	230	41.57	1247/30	4000	4000	6500	0.36	15	3.9	13
144	79	91	2.0	1.5	C102_0420 EZ303U	140	230	41.57	1247/30	4000	4000	6500	0.47	15	3.9	14
171	30	32	0.9	4.0	C102_0350 EZ301U	95	220	35.07	2700/77	4000	4000	6500	0.30	15	3.9	12
171	51	57	1.4	2.4	C102_0350 EZ302U	140	220	35.07	2700/77	4000	4000	6500	0.40	15	3.9	13
171	67	77	1.9	1.8	C102_0350 EZ303U	140	220	35.07	2700/77	4000	4000	6500	0.51	15	3.9	14
171	78	95	2.2	1.5	C102_0350 EZ401U	140	240	35.07	2700/77	4000	4000	6500	1.0	15	3.9	15
193	27	29	0.8	4.5	C102_0310 EZ301U	84	190	31.07	435/14	4000	4000	6500	0.30	15	3.9	12
193	45	51	1.4	2.7	C102_0310 EZ302U	140	190	31.07	435/14	4000	4000	6500	0.40	15	3.9	13
193	59	68	1.8	2.0	C102_0310 EZ303U	140	190	31.07	435/14	4000	4000	6500	0.51	15	3.9	14
193	69	84	2.1	1.7	C102_0310 EZ401U	140	240	31.07	435/14	4000	4000	6500	1.0	15	3.9	15
212	63	77	2.0	1.9	C102_0280 EZ401U	140	240	28.36	312/11	4000	4000	6500	1.1	15	3.9	15
239	56	68	1.9	2.1	C102_0250 EZ401U	140	240	25.13	377/15	4000	4000	6500	1.1	15	3.9	15
255	34	38	1.2	3.4	C102_0240 EZ302U	110	170	23.52	1035/44	4000	4000	6500	0.49	15	3.9	13
255	45	51	1.6	2.6	C102_0240 EZ303U	140	170	23.52	1035/44	4000	4000	6500	0.60	15	3.9	14
255	52	64	1.8	2.2	C102_0240 EZ401U	140	240	23.52	1035/44	4000	4000	6500	1.1	15	3.9	15
255	78	100	2.7	1.5	C102_0240 EZ501U	140	240	23.52	1035/44	4000	4000	6500	3.1	15	3.9	16
288	30	34	1.2	3.7	C102_0210 EZ302U	100	150	20.84	667/32	4000	4000	6500	0.49	15	3.9	13
288	40	45	1.5	2.8	C102_0210 EZ303U	120	150	20.84	667/32	4000	4000	6500	0.60	15	3.9	14
288	47	57	1.8	2.4	C102_0210 EZ401U	140	240	20.84	667/32	4000	4000	6500	1.1	15	3.9	15
288	69	89	2.7	1.6	C102_0210 EZ501U	140	240	20.84	667/32	4000	4000	6500	3.1	15	3.9	16
288	71	99	2.8	1.6	C102_0210 EZ402U	140	240	20.84	667/32	4000	4000	6500	1.8	15	3.9	16
338	26	29	1.2	4.0	C102_0175 EZ302U	86	130	17.73	195/11	3800	3800	6000	0.59	15	3.9	13
338	34	39	1.6	3.1	C102_0175 EZ303U	100	130	17.73	195/11	3800	3800	6000	0.70	15	3.9	14
338	40	48	1.8	2.7	C102_0175 EZ401U	140	240	17.73	195/11	3800	3800	6000	1.2	15	3.9	15
338	58	76	2.6	1.8	C102_0175 EZ501U	140	240	17.73	195/11	3800	3800	6000	3.2	15	3.9	16
338	60	84	2.7	1.8	C102_0175 EZ402U	140	240	17.73	195/11	3800	3800	6000	1.9	15	3.9	16
382	23	26	1.3	4.0	C102_0155 EZ302U	76	110	15.71	377/24	3800	3800	6000	0.60	15	3.9	13
382	30	34	1.6	3.1	C102_0155 EZ303U	91	110	15.71	377/24	3800	3800	6000	0.71	15	3.9	14
382	35	43	1.7	2.9	C102_0155 EZ401U	130	240	15.71	377/24	3800	3800	6000	1.2	15	3.9	15
382	52	67	2.6	2.0	C102_0155 EZ501U	140	240	15.71	377/24	3800	3800	6000	3.2	15	3.9	16
382	53	75	2.6	1.9	C102_0155 EZ402U	140	240	15.71	377/24	3800	3800	6000	1.9	15	3.9	16
427	31	38	1.7	3.2	C102_0140 EZ401U	120	240	14.06	2010/143	3800	3800	6000	1.3	15	3.9	15
427	46	60	2.5	2.1	C102_0140 EZ501U	140	240	14.06	2010/143	3800	3800	6000	3.3	15	3.9	16
427	48	67	2.6	2.1	C102_0140 EZ402U	140	240	14.06	2010/143	3800	3800	6000	2.0	15	3.9	16
427	71	106	3.8	1.4	C102_0140 EZ502U	140	240	14.06	2010/143	3800	3800	6000	5.6	15	3.9	17
482	28	34	1.7	3.4	C102_0125 EZ401U	100	240	12.46	1943/156	3800	3800	6000	1.3	15	3.9	15
482	41	53	2.5	2.3	C102_0125 EZ501U	140	240	12.46	1943/156	3800	3800	6000	3.3	15	3.9	16
482	42	59	2.5	2.2	C102_0125 EZ402U	140	240	12.46	1943/156	3800	3800	6000	2.0	15	3.9	16
482	63	94	3.8	1.5	C102_0125 EZ502U	140	240	12.46	1943/156	3800	3800	6000	5.6	15	3.9	17
482	63	95	3.8	1.5	C102_0125 EZ701U	140	240	12.46	1943/156	3800	3800	6000	8.9	15	3.9	19
482	70	101	4.2	1.4	C102_0125 EZ404U	140	240	12.46	1943/156	3800	3800	6000	3.4	15	3.9	18
512	17	19	1.5	4.0	C102_0115 EZ302U	57	85	11.72	1160/99	3600	3600	6000	0.82	15	3.9	13
512	22	26	1.9	3.1	C102_0115 EZ303U	68	85	11.72	1160/99	3600	3600	6000	0.93	15	3.9	14
512	26	32	1.6	3.6	C102_0115 EZ401U	97	240	11.72	1160/99	3600	3600	6000	1.5	15	3.9	15
512	39	50	2.4	2.4	C102_0115 EZ501U	140	240	11.72	1160/99	3600	3600	6000	3.4	15	3.9	16
512	40	56	2.5	2.3	C102_0115 EZ402U	140	240	11.72	1160/99	3600	3600	6000	2.2	15	3.9	16
512	59	89	3.7	1.6	C102_0115 EZ502U	140	240	11.72	1160/99	3600	3600	6000	5.7	15	3.9	17
512	59	90	3.7	1.6	C102_0115 EZ701U	140	240	11.72	1160/99	3600	3600	6000	9.0	15	3.9	19
512	66	95	4.1	1.4	C102_0115 EZ404U	140	240	11.72	1160/99	3600	3600	6000	3.5	15	3.9	18
578	15	17	1.6	4.0	C102_0105 EZ302U	50	76	10.38	841/81	3600	3600	6000	0.83	15	3.9	13
578	20	23	2.0	3.1	C102_0105 EZ303U	60	76	10.38	841/81	3600	3600	6000	0.94	15	3.9	14
578	23	28	1.6	3.9	C102_0105 EZ401U	86	240	10.38	841/81	3600	3600	6000	1.5	15	3.9	15
578	34	44	2.4	2.6	C102_0105 EZ501U	140	240	10.38	841/81	3600	3600	6000	3.4	15	3.9	16
578	35	49	2.4	2.5	C102_0105 EZ402U	140	240	10.38	841/81	3600	3600	6000	2.2	15	3.9	16
578	52	79	3.6	1.7	C102_0105 EZ502U	140	240	10.38	841/81	3600	3600	6000	5.7	15	3.9	17
578	52	80	3.6	1.7	C102_0105 EZ701U	140	240	10.38	841/81	3600	3600	6000	9.0	15	3.9	19
578	58	85	4.1	1.5	C102_0105 EZ404U	140	240	10.38	841/81	3600	3600	6000	3.5	15	3.9	18
643	21	25	1.6	4.1	C102_0093 EZ401U	77	240	9.326	3180/341	3600	3600	6000	1.6	15	3.9	15
643	31	40	2.3	2.8	C102_0093 EZ501U	140	240	9.326	3180/341	3600	3600	6000	3.6	15	3.9	16
643	32	44	2.4	2.7	C102_0093 EZ402U	140	240	9.326	3180/341	3600	3600	6000	2.3	15	3.9	16

n_{2N} [rpm]	M_{2N} [Nm]	$M_{2,0}$ [Nm]	a_{th}	S	Type	M_{2acc} [Nm]	M_{2NOT} [Nm]	i	i_{exakt}	n_{1maxDB} EL1,2,3,4 [rpm]	n_{1maxDB} EL5,6 [rpm]	n_{1maxZB} [rpm]	J_1 [kgcm²]	$\Delta\varphi_2$ [arcmin]	C_2 [Nm/arcmin]	m [kg]
C1 (n_{1N} = 6000 rpm, $M_{2acc,max}$ = 140 Nm)																
643	47	71	3.6	1.8	C102_0093 EZ502U	140	240	9.326	3180/341	3600	3600	6000	5.9	15	3.9	17
643	47	71	3.6	1.8	C102_0093 EZ701U	140	240	9.326	3180/341	3600	3600	6000	9.2	15	3.9	19
643	52	76	4.0	1.6	C102_0093 EZ404U	140	240	9.326	3180/341	3600	3600	6000	3.7	15	3.9	18
643	56	96	4.3	1.5	C102_0093 EZ503U	140	240	9.326	3180/341	3600	3600	6000	8.3	15	3.9	19
726	18	22	1.6	4.5	C102_0083 EZ401U	68	240	8.263	1537/186	3600	3600	6000	1.7	15	3.9	15
726	27	35	2.3	3.0	C102_0083 EZ501U	130	240	8.263	1537/186	3600	3600	6000	3.6	15	3.9	16
726	28	39	2.4	3.0	C102_0083 EZ402U	130	240	8.263	1537/186	3600	3600	6000	2.4	15	3.9	16
726	42	63	3.5	2.0	C102_0083 EZ502U	140	240	8.263	1537/186	3600	3600	6000	5.9	15	3.9	17
726	42	63	3.5	2.0	C102_0083 EZ701U	140	240	8.263	1537/186	3600	3600	6000	9.2	15	3.9	19
726	46	67	3.9	1.8	C102_0083 EZ404U	140	240	8.263	1537/186	3600	3600	6000	3.7	15	3.9	18
726	50	85	4.2	1.7	C102_0083 EZ503U	140	240	8.263	1537/186	3600	3600	6000	8.3	15	3.9	19
770	11	13	1.8	4.0	C102_0078 EZ302U	38	57	7.796	3243/416	4000	4000	6500	0.54	18	3.1	13
770	15	17	2.3	3.1	C102_0078 EZ303U	45	57	7.796	3243/416	4000	4000	6500	0.65	18	3.1	14
770	17	21	1.8	4.0	C102_0078 EZ401U	64	210	7.796	3243/416	4000	4000	6500	1.2	18	3.1	15
770	26	33	2.7	2.7	C102_0078 EZ501U	120	210	7.796	3243/416	4000	4000	6500	3.1	18	3.1	16
770	26	37	2.8	2.6	C102_0078 EZ402U	120	210	7.796	3243/416	4000	4000	6500	1.9	18	3.1	16
770	39	59	4.1	1.7	C102_0078 EZ502U	130	210	7.796	3243/416	4000	4000	6500	5.4	18	3.1	17
770	39	60	4.1	1.7	C102_0078 EZ701U	130	220	7.796	3243/416	4000	4000	6500	8.7	18	3.1	19
770	44	64	4.6	1.6	C102_0078 EZ404U	130	210	7.796	3243/416	4000	4000	6500	3.2	18	3.1	18
770	47	80	4.9	1.5	C102_0078 EZ503U	130	210	7.796	3243/416	4000	4000	6500	7.8	18	3.1	19
947	9.2	10	2.0	4.0	C102_0063 EZ302U	31	46	6.338	507/80	3800	3800	6000	0.67	18	3.1	13
947	12	14	2.6	3.1	C102_0063 EZ303U	37	46	6.338	507/80	3800	3800	6000	0.78	18	3.1	14
947	14	17	1.8	4.5	C102_0063 EZ401U	52	180	6.338	507/80	3800	3800	6000	1.3	18	3.1	15
947	21	27	2.6	3.1	C102_0063 EZ501U	98	180	6.338	507/80	3800	3800	6000	3.3	18	3.1	16
947	22	30	2.7	3.0	C102_0063 EZ402U	98	180	6.338	507/80	3800	3800	6000	2.0	18	3.1	16
947	32	48	4.0	2.0	C102_0063 EZ502U	130	180	6.338	507/80	3800	3800	6000	5.6	18	3.1	17
947	32	49	4.0	2.0	C102_0063 EZ701U	120	220	6.338	507/80	3800	3800	6000	8.9	18	3.1	19
947	36	52	4.4	1.8	C102_0063 EZ404U	130	180	6.338	507/80	3800	3800	6000	3.4	18	3.1	18
947	38	65	4.7	1.7	C102_0063 EZ503U	130	180	6.338	507/80	3800	3800	6000	8.0	18	3.1	19
947	44	88	5.5	1.4	C102_0063 EZ702U	130	220	6.338	507/80	3800	3800	6000	14	18	3.1	22
1021	8.5	9.6	2.1	4.0	C102_0059 EZ302U	28	43	5.875	47/8	3800	3800	6000	0.67	18	3.1	13
1021	11	13	2.7	3.1	C102_0059 EZ303U	34	43	5.875	47/8	3800	3800	6000	0.78	18	3.1	14
1021	13	16	1.7	4.8	C102_0059 EZ401U	48	170	5.875	47/8	3800	3800	6000	1.3	18	3.1	15
1021	19	25	2.6	3.2	C102_0059 EZ501U	91	170	5.875	47/8	3800	3800	6000	3.3	18	3.1	16
1021	20	28	2.6	3.1	C102_0059 EZ402U	91	170	5.875	47/8	3800	3800	6000	2.0	18	3.1	16
1021	30	44	3.9	2.1	C102_0059 EZ502U	130	170	5.875	47/8	3800	3800	6000	5.6	18	3.1	17
1021	30	45	3.9	2.1	C102_0059 EZ701U	110	220	5.875	47/8	3800	3800	6000	8.9	18	3.1	19
1021	33	48	4.4	1.9	C102_0059 EZ404U	130	170	5.875	47/8	3800	3800	6000	3.4	18	3.1	18
1021	35	60	4.7	1.8	C102_0059 EZ503U	130	170	5.875	47/8	3800	3800	6000	8.0	18	3.1	19
1021	41	81	5.4	1.5	C102_0059 EZ702U	130	220	5.875	47/8	3800	3800	6000	14	18	3.1	22
1194	17	21	2.5	3.6	C102_0050 EZ501U	78	150	5.025	201/40	3800	3800	6000	3.4	18	3.1	16
1194	17	24	2.6	3.5	C102_0050 EZ402U	78	150	5.025	201/40	3800	3800	6000	2.2	18	3.1	16
1194	25	38	3.8	2.3	C102_0050 EZ502U	120	150	5.025	201/40	3800	3800	6000	5.7	18	3.1	17
1194	25	39	3.8	2.3	C102_0050 EZ701U	97	220	5.025	201/40	3800	3800	6000	9.0	18	3.1	19
1194	28	41	4.3	2.1	C102_0050 EZ404U	120	150	5.025	201/40	3800	3800	6000	3.5	18	3.1	18
1194	30	52	4.5	2.0	C102_0050 EZ503U	120	150	5.025	201/40	3800	3800	6000	8.1	18	3.1	19
1194	35	70	5.3	1.7	C102_0050 EZ702U	130	220	5.025	201/40	3800	3800	6000	14	18	3.1	22
1288	15	20	2.5	3.8	C102_0047 EZ501U	72	140	4.658	3149/676	3800	3800	6000	3.4	18	3.1	16
1288	16	22	2.5	3.7	C102_0047 EZ402U	72	140	4.658	3149/676	3800	3800	6000	2.2	18	3.1	16
1288	23	35	3.8	2.5	C102_0047 EZ502U	110	140	4.658	3149/676	3800	3800	6000	5.7	18	3.1	17
1288	23	36	3.8	2.5	C102_0047 EZ701U	90	220	4.658	3149/676	3800	3800	6000	9.0	18	3.1	19
1288	26	38	4.2	2.2	C102_0047 EZ404U	110	140	4.658	3149/676	3800	3800	6000	3.5	18	3.1	18
1288	28	48	4.5	2.1	C102_0047 EZ503U	110	140	4.658	3149/676	3800	3800	6000	8.1	18	3.1	19
1288	33	65	5.2	1.8	C102_0047 EZ702U	130	220	4.658	3149/676	3800	3800	6000	14	18	3.1	22
1432	6.1	6.8	2.4	4.0	C102_0042 EZ302U	20	30	4.189	377/90	3600	3600	6000	0.99	18	3.1	13
1432	8.0	9.1	3.2	3.1	C102_0042 EZ303U	24	30	4.189	377/90	3600	3600	6000	1.1	18	3.1	14
1432	14	18	2.4	4.0	C102_0042 EZ501U	65	120	4.189	377/90	3600	3600	6000	3.6	18	3.1	16
1432	14	20	2.5	3.9	C102_0042 EZ402U	65	120	4.189	377/90	3600	3600	6000	2.3	18	3.1	16
1432	21	32	3.7	2.6	C102_0042 EZ502U	98	120	4.189	377/90	3600	3600	6000	5.9	18	3.1	17
1432	21	32	3.7	2.6	C102_0042 EZ701U	81	220	4.189	377/90	3600	3600	6000	9.2	18	3.1	19
1432	24	34	4.1	2.4	C102_0042 EZ404U	98	120	4.189	377/90	3600	3600	6000	3.7	18	3.1	18
1432	25	43	4.4	2.2	C102_0042 EZ503U	98	120	4.189	377/90	3600	3600	6000	8.3	18	3.1	19
1432	29	58	5.1	1.9	C102_0042 EZ702U	130	220	4.189	377/90	3600	3600	6000	14	18	3.1	22
1545	5.7	6.3	2.5	4.0	C102_0039 EZ302U	19	28	3.883	1363/351	3600	3600	6000	1.0	18	3.1	13

n_{2N} [rpm]	M_{2N} [Nm]	$M_{2,0}$ [Nm]	a_{th}	S	Type	M_{2acc} [Nm]	M_{2NOT} [Nm]	i	i_{exakt}	n_{1maxDB} EL1,2,3,4 [rpm]	n_{1maxDB} EL5,6 [rpm]	n_{1maxZB} [rpm]	J_1 [kgcm²]	$\Delta\varphi_2$ [arcmin]	C_2 [Nm/arcmin]	m [kg]
C1 (n_{1N} = 6000 rpm, $M_{2acc,max}$ = 140 Nm)																
1545	7.4	8.5	3.3	3.1	C102_0039 EZ303U	23	28	3.883	1363/351	3600	3600	6000	1.1	18	3.1	14
1545	13	17	2.4	4.3	C102_0039 EZ501U	60	110	3.883	1363/351	3600	3600	6000	3.6	18	3.1	16
1545	13	18	2.5	4.1	C102_0039 EZ402U	60	110	3.883	1363/351	3600	3600	6000	2.3	18	3.1	16
1545	20	29	3.7	2.8	C102_0039 EZ502U	90	110	3.883	1363/351	3600	3600	6000	5.9	18	3.1	17
1545	20	30	3.7	2.8	C102_0039 EZ701U	75	220	3.883	1363/351	3600	3600	6000	9.2	18	3.1	19
1545	22	32	4.1	2.5	C102_0039 EZ404U	90	110	3.883	1363/351	3600	3600	6000	3.7	18	3.1	18
1545	23	40	4.4	2.3	C102_0039 EZ503U	90	110	3.883	1363/351	3600	3600	6000	8.3	18	3.1	19
1545	27	54	5.1	2.0	C102_0039 EZ702U	130	220	3.883	1363/351	3600	3600	6000	14	18	3.1	22
1800	11	14	2.3	4.7	C102_0033 EZ501U	52	97	3.334	2067/620	3600	3600	6000	3.9	18	3.1	16
1800	11	16	2.4	4.6	C102_0033 EZ402U	52	97	3.334	2067/620	3600	3600	6000	2.6	18	3.1	16
1800	17	25	3.6	3.1	C102_0033 EZ502U	78	97	3.334	2067/620	3600	3600	6000	6.2	18	3.1	17
1800	17	26	3.6	3.1	C102_0033 EZ701U	65	220	3.334	2067/620	3600	3600	6000	9.5	18	3.1	19
1800	19	27	4.0	2.8	C102_0033 EZ404U	78	97	3.334	2067/620	3600	3600	6000	4.0	18	3.1	18
1800	20	34	4.2	2.6	C102_0033 EZ503U	78	97	3.334	2067/620	3600	3600	6000	8.6	18	3.1	19
1800	23	46	4.9	2.2	C102_0033 EZ702U	120	220	3.334	2067/620	3600	3600	6000	15	18	3.1	22
1941	10	13	2.3	5.0	C102_0031 EZ501U	48	90	3.091	2491/806	3600	3600	6000	3.9	18	3.1	16
1941	10	15	2.4	4.8	C102_0031 EZ402U	48	90	3.091	2491/806	3600	3600	6000	2.6	18	3.1	16
1941	16	23	3.5	3.2	C102_0031 EZ502U	72	90	3.091	2491/806	3600	3600	6000	6.2	18	3.1	17
1941	16	24	3.5	3.2	C102_0031 EZ701U	60	220	3.091	2491/806	3600	3600	6000	9.5	18	3.1	19
1941	17	25	3.9	2.9	C102_0031 EZ404U	72	90	3.091	2491/806	3600	3600	6000	4.0	18	3.1	18
1941	19	32	4.2	2.7	C102_0031 EZ503U	72	90	3.091	2491/806	3600	3600	6000	8.6	18	3.1	19
1941	22	43	4.9	2.3	C102_0031 EZ702U	120	220	3.091	2491/806	3600	3600	6000	15	18	3.1	22
C2 (n_{1N} = 3000 rpm, $M_{2acc,max}$ = 230 Nm)																
32	140	148	1.6	1.4	C203_0920 EZ302U	230	400	92.40	29939/324	4000	4000	6500	0.36	14	8.3	22
37	123	129	1.5	1.6	C203_0810 EZ302U	230	400	80.62	11609/144	4000	4000	6500	0.36	14	8.3	22
37	160	169	2.0	1.3	C203_0810 EZ303U	230	400	80.62	11609/144	4000	4000	6500	0.47	14	8.3	22
43	108	115	1.4	1.8	C202_0700 EZ302U	230	300	70.32	7595/108	4000	4000	6500	0.36	14	8.3	17
43	141	149	1.9	1.4	C202_0700 EZ303U	230	300	70.32	7595/108	4000	4000	6500	0.47	14	8.3	18
49	95	100	1.4	2.0	C202_0610 EZ302U	210	260	61.35	2945/48	4000	4000	6500	0.36	14	8.3	17
49	123	130	1.8	1.5	C202_0610 EZ303U	210	260	61.35	2945/48	4000	4000	6500	0.47	14	8.3	18
53	153	164	2.2	1.3	C202_0560 EZ401U	230	400	56.42	1862/33	4000	4000	6500	1.0	14	8.3	19
61	134	143	2.1	1.5	C202_0490 EZ401U	230	400	49.23	1083/22	4000	4000	6500	1.0	14	8.3	19
64	127	136	2.0	1.6	C202_0470 EZ401U	230	400	46.82	2107/45	4000	4000	6500	1.1	14	8.3	19
73	111	119	1.9	1.8	C202_0410 EZ401U	230	400	40.85	817/20	4000	4000	6500	1.1	14	8.3	19
85	96	102	1.8	2.1	C202_0350 EZ401U	230	400	35.18	1372/39	4000	4000	6500	1.2	14	8.3	19
85	147	160	2.7	1.4	C202_0350 EZ501U	230	400	35.18	1372/39	4000	4000	6500	3.1	14	8.3	20
85	160	177	3.0	1.2	C202_0350 EZ402U	230	400	35.18	1372/39	4000	4000	6500	1.9	14	8.3	20
98	83	89	1.7	2.4	C202_0310 EZ401U	230	400	30.69	399/13	4000	4000	6500	1.2	14	8.3	19
98	128	140	2.5	1.6	C202_0310 EZ501U	230	400	30.69	399/13	4000	4000	6500	3.1	14	8.3	20
98	140	155	2.8	1.4	C202_0310 EZ402U	230	400	30.69	399/13	4000	4000	6500	1.9	14	8.3	20
106	77	82	1.6	2.6	C202_0280 EZ401U	230	400	28.24	4067/144	4000	4000	6500	1.2	14	8.3	19
106	118	129	2.4	1.7	C202_0280 EZ501U	230	400	28.24	4067/144	4000	4000	6500	3.2	14	8.3	20
106	129	142	2.7	1.6	C202_0280 EZ402U	230	400	28.24	4067/144	4000	4000	6500	1.9	14	8.3	20
122	67	72	1.5	3.0	C202_0250 EZ401U	200	400	24.64	1577/64	4000	4000	6500	1.3	14	8.3	19
122	103	112	2.3	1.9	C202_0250 EZ501U	230	400	24.64	1577/64	4000	4000	6500	3.2	14	8.3	20
122	112	124	2.5	1.8	C202_0250 EZ402U	230	400	24.64	1577/64	4000	4000	6500	2.0	14	8.3	20
127	64	69	1.5	3.1	C202_0240 EZ401U	190	400	23.59	637/27	4000	4000	6500	1.3	14	8.3	19
127	98	108	2.2	2.0	C202_0240 EZ501U	230	400	23.59	637/27	4000	4000	6500	3.3	14	8.3	20
127	108	119	2.4	1.9	C202_0240 EZ402U	230	400	23.59	637/27	4000	4000	6500	2.0	14	8.3	20
146	56	60	1.4	3.6	C202_0210 EZ401U	170	400	20.58	247/12	4000	4000	6500	1.4	14	8.3	19
146	86	94	2.1	2.3	C202_0210 EZ501U	230	400	20.58	247/12	4000	4000	6500	3.3	14	8.3	20
146	94	104	2.3	2.1	C202_0210 EZ402U	230	400	20.58	247/12	4000	4000	6500	2.1	14	8.3	20
146	138	172	3.3	1.5	C202_0210 EZ404U	230	400	20.58	247/12	4000	4000	6500	3.4	14	8.3	22
146	148	160	3.6	1.4	C202_0210 EZ502U	230	400	20.58	247/12	4000	4000	6500	5.6	14	8.3	21
146	148	166	3.6	1.4	C202_0210 EZ701U	230	400	20.58	247/12	4000	4000	6500	8.9	14	8.3	23
171	48	51	1.3	4.2	C202_0175 EZ401U	140	400	17.52	3626/207	3700	3700	5500	1.6	14	8.3	19
171	73	80	1.9	2.7	C202_0175 EZ501U	230	400	17.52	3626/207	3700	3700	5500	3.5	14	8.3	20
171	80	88	2.1	2.5	C202_0175 EZ402U	230	400	17.52	3626/207	3700	3700	5500	2.3	14	8.3	20
171	117	146	3.1	1.7	C202_0175 EZ404U	230	400	17.52	3626/207	3700	3700	5500	3.6	14	8.3	22
171	126	136	3.3	1.6	C202_0175 EZ502U	230	400	17.52	3626/207	3700	3700	5500	5.8	14	8.3	21
171	126	141	3.3	1.6	C202_0175 EZ701U	230	400	17.52	3626/207	3700	3700	5500	9.1	14	8.3	23
196	42	44	1.2	4.8	C202_0155 EZ401U	130	400	15.28	703/46	3700	3700	5500	1.6	14	8.3	19
196	64	70	1.8	3.1	C202_0155 EZ501U	230	400	15.28	703/46	3700	3700	5500	3.5	14	8.3	20
196	70	77	2.0	2.9	C202_0155 EZ402U	230	400	15.28	703/46	3700	3700	5500	2.3	14	8.3	20

n_{2N} [rpm]	M_{2N} [Nm]	$M_{2,0}$ [Nm]	a_{th}	S	Type	M_{2acc} [Nm]	M_{2NOT} [Nm]	i	i_{exakt}	n_{1maxDB} EL1,2,3,4 [rpm]	n_{1maxDB} EL5,6 [rpm]	n_{1maxZB} [rpm]	J_1 [kgcm²]	$\Delta\varphi_2$ [arcmin]	C_2 [Nm/arcmin]	m [kg]
C2 (n_{1N} = 3000 rpm, $M_{2acc,max}$ = 230 Nm)																
196	102	127	2.9	2.0	C202_0155 EZ404U	230	400	15.28	703/46	3700	3700	5500	3.6	14	8.3	22
196	110	119	3.1	1.8	C202_0155 EZ502U	230	400	15.28	703/46	3700	3700	5500	5.8	14	8.3	21
196	110	123	3.1	1.8	C202_0155 EZ701U	230	400	15.28	703/46	3700	3700	5500	9.1	14	8.3	23
196	144	165	4.0	1.4	C202_0155 EZ503U	230	400	15.28	703/46	3700	3700	5500	8.2	14	8.3	23
213	59	64	1.7	3.4	C202_0140 EZ501U	220	400	14.12	3430/243	3700	3700	5500	3.7	14	8.3	20
213	64	71	1.9	3.1	C202_0140 EZ402U	220	400	14.12	3430/243	3700	3700	5500	2.5	14	8.3	20
213	94	118	2.8	2.1	C202_0140 EZ404U	230	400	14.12	3430/243	3700	3700	5500	3.8	14	8.3	22
213	101	110	3.0	2.0	C202_0140 EZ502U	230	400	14.12	3430/243	3700	3700	5500	6.0	14	8.3	21
213	101	114	3.0	2.0	C202_0140 EZ701U	230	400	14.12	3430/243	3700	3700	5500	9.3	14	8.3	23
213	133	152	3.9	1.5	C202_0140 EZ503U	230	400	14.12	3430/243	3700	3700	5500	8.4	14	8.3	23
244	51	56	1.6	3.8	C202_0125 EZ501U	190	360	12.32	665/54	3700	3700	5500	3.8	14	8.3	20
244	56	62	1.8	3.5	C202_0125 EZ402U	190	360	12.32	665/54	3700	3700	5500	2.5	14	8.3	20
244	82	103	2.6	2.4	C202_0125 EZ404U	230	360	12.32	665/54	3700	3700	5500	3.8	14	8.3	22
244	88	96	2.8	2.2	C202_0125 EZ502U	230	360	12.32	665/54	3700	3700	5500	6.1	14	8.3	21
244	88	99	2.8	2.2	C202_0125 EZ701U	230	400	12.32	665/54	3700	3700	5500	9.4	14	8.3	23
244	116	133	3.7	1.7	C202_0125 EZ503U	230	360	12.32	665/54	3700	3700	5500	8.4	14	8.3	23
244	143	172	4.6	1.4	C202_0125 EZ702U	230	400	12.32	665/54	3700	3700	5500	15	14	8.3	26
255	49	54	1.6	3.9	C202_0120 EZ501U	180	340	11.76	294/25	3500	3500	5000	4.0	14	8.3	20
255	54	59	1.8	3.6	C202_0120 EZ402U	180	340	11.76	294/25	3500	3500	5000	2.7	14	8.3	20
255	79	98	2.6	2.4	C202_0120 EZ404U	230	340	11.76	294/25	3500	3500	5000	4.1	14	8.3	22
255	84	91	2.8	2.3	C202_0120 EZ502U	230	340	11.76	294/25	3500	3500	5000	6.3	14	8.3	21
255	84	95	2.8	2.3	C202_0120 EZ701U	230	400	11.76	294/25	3500	3500	5000	9.6	14	8.3	23
255	111	127	3.7	1.7	C202_0120 EZ503U	230	340	11.76	294/25	3500	3500	5000	8.7	14	8.3	23
255	137	164	4.6	1.4	C202_0120 EZ702U	230	400	11.76	294/25	3500	3500	5000	15	14	8.3	26
292	43	47	1.6	4.3	C202_0105 EZ501U	160	300	10.26	513/50	3500	3500	5000	4.0	14	8.3	20
292	47	52	1.7	3.9	C202_0105 EZ402U	160	300	10.26	513/50	3500	3500	5000	2.8	14	8.3	20
292	69	86	2.6	2.7	C202_0105 EZ404U	230	300	10.26	513/50	3500	3500	5000	4.1	14	8.3	22
292	74	80	2.7	2.5	C202_0105 EZ502U	230	300	10.26	513/50	3500	3500	5000	6.3	14	8.3	21
292	74	83	2.7	2.5	C202_0105 EZ701U	200	400	10.26	513/50	3500	3500	5000	9.6	14	8.3	23
292	97	110	3.6	1.9	C202_0105 EZ503U	230	300	10.26	513/50	3500	3500	5000	8.7	14	8.3	23
292	119	143	4.5	1.5	C202_0105 EZ702U	230	400	10.26	513/50	3500	3500	5000	15	14	8.3	26
292	134	159	5.0	1.4	C202_0105 EZ505U	230	400	10.26	513/50	3500	3500	5000	13	14	8.3	26
320	67	76	2.7	2.7	C202_0094 EZ701U	180	400	9.387	2450/261	3500	3500	5000	10	14	8.3	23
320	109	131	4.4	1.6	C202_0094 EZ702U	230	400	9.387	2450/261	3500	3500	5000	15	14	8.3	26
320	123	146	4.9	1.5	C202_0094 EZ505U	230	400	9.387	2450/261	3500	3500	5000	14	14	8.3	26
366	59	66	2.6	2.9	C202_0082 EZ701U	160	400	8.190	475/58	3500	3500	5000	10	14	8.3	23
366	95	114	4.3	1.8	C202_0082 EZ702U	230	400	8.190	475/58	3500	3500	5000	15	14	8.3	26
366	107	127	4.8	1.6	C202_0082 EZ505U	230	400	8.190	475/58	3500	3500	5000	14	14	8.3	26
366	131	165	5.9	1.3	C202_0082 EZ703U	230	400	8.190	475/58	3500	3500	5000	23	14	8.3	28
385	33	36	1.9	4.1	C202_0078 EZ501U	120	220	7.800	39/5	4000	4000	6500	3.4	17	6.0	20
385	36	39	2.1	3.7	C202_0078 EZ402U	120	220	7.800	39/5	4000	4000	6500	2.1	17	6.0	20
385	52	65	3.1	2.5	C202_0078 EZ404U	170	220	7.800	39/5	4000	4000	6500	3.5	17	6.0	22
385	56	61	3.3	2.4	C202_0078 EZ502U	170	220	7.800	39/5	4000	4000	6500	5.7	17	6.0	21
385	56	63	3.3	2.4	C202_0078 EZ701U	150	350	7.800	39/5	4000	4000	6500	9.0	17	6.0	23
385	73	84	4.4	1.8	C202_0078 EZ503U	170	220	7.800	39/5	4000	4000	6500	8.1	17	6.0	23
385	91	109	5.4	1.5	C202_0078 EZ702U	200	350	7.800	39/5	4000	4000	6500	14	17	6.0	26
385	102	121	6.1	1.3	C202_0078 EZ505U	200	350	7.800	39/5	4000	4000	6500	13	17	6.0	26
477	26	29	1.9	4.7	C202_0063 EZ501U	98	180	6.295	3330/529	3700	3700	5500	3.7	17	6.0	20
477	29	32	2.0	4.3	C202_0063 EZ402U	98	180	6.295	3330/529	3700	3700	5500	2.4	17	6.0	20
477	42	53	3.0	2.9	C202_0063 EZ404U	150	180	6.295	3330/529	3700	3700	5500	3.8	17	6.0	22
477	45	49	3.2	2.7	C202_0063 EZ502U	150	180	6.295	3330/529	3700	3700	5500	6.0	17	6.0	21
477	45	51	3.2	2.7	C202_0063 EZ701U	120	350	6.295	3330/529	3700	3700	5500	9.3	17	6.0	23
477	59	68	4.2	2.1	C202_0063 EZ503U	150	180	6.295	3330/529	3700	3700	5500	8.4	17	6.0	23
477	73	88	5.2	1.7	C202_0063 EZ702U	200	350	6.295	3330/529	3700	3700	5500	15	17	6.0	26
477	82	98	5.9	1.5	C202_0063 EZ505U	200	350	6.295	3330/529	3700	3700	5500	13	17	6.0	26
477	101	127	7.2	1.2	C202_0063 EZ703U	200	350	6.295	3330/529	3700	3700	5500	22	17	6.0	28
518	24	26	1.8	5.0	C202_0058 EZ501U	90	170	5.791	666/115	3700	3700	5500	3.7	17	6.0	20
518	26	29	2.0	4.5	C202_0058 EZ402U	90	170	5.791	666/115	3700	3700	5500	2.4	17	6.0	20
518	39	48	3.0	3.1	C202_0058 EZ404U	130	170	5.791	666/115	3700	3700	5500	3.8	17	6.0	22
518	42	45	3.2	2.9	C202_0058 EZ502U	130	170	5.791	666/115	3700	3700	5500	6.0	17	6.0	21
518	42	47	3.2	2.9	C202_0058 EZ701U	110	350	5.791	666/115	3700	3700	5500	9.3	17	6.0	23
518	54	62	4.2	2.2	C202_0058 EZ503U	130	170	5.791	666/115	3700	3700	5500	8.4	17	6.0	23
518	67	81	5.1	1.8	C202_0058 EZ702U	200	350	5.791	666/115	3700	3700	5500	15	17	6.0	26
518	76	90	5.8	1.6	C202_0058 EZ505U	200	350	5.791	666/115	3700	3700	5500	13	17	6.0	26

n_{2N} [rpm]	M_{2N} [Nm]	$M_{2,0}$ [Nm]	a_{th}	S	Type	M_{2acc} [Nm]	M_{2NOT} [Nm]	i	i_{exakt}	n_{1maxDB} EL1,2,3,4 [rpm]	n_{1maxDB} EL5,6 [rpm]	n_{1maxZB} [rpm]	J_1 [kgcm²]	$\Delta\varphi_2$ [arcmin]	C_2 [Nm/arcmin]	m [kg]
C2 (n_{1N} = 3000 rpm, $M_{2acc,max}$ = 230 Nm)																
518	93	117	7.1	1.3	C202_0058 EZ703U	200	350	5.791	666/115	3700	3700	5500	22	17	6.0	28
591	23	26	2.0	5.0	C202_0051 EZ402U	79	150	5.072	350/69	3700	3700	5500	2.7	17	6.0	20
591	34	42	2.9	3.4	C202_0051 EZ404U	120	150	5.072	350/69	3700	3700	5500	4.1	17	6.0	22
591	36	39	3.1	3.1	C202_0051 EZ502U	120	150	5.072	350/69	3700	3700	5500	6.3	17	6.0	21
591	36	41	3.1	3.1	C202_0051 EZ701U	98	350	5.072	350/69	3700	3700	5500	9.6	17	6.0	23
591	48	55	4.1	2.4	C202_0051 EZ503U	120	150	5.072	350/69	3700	3700	5500	8.7	17	6.0	23
591	59	71	5.0	1.9	C202_0051 EZ702U	200	350	5.072	350/69	3700	3700	5500	15	17	6.0	26
591	66	79	5.7	1.7	C202_0051 EZ505U	200	350	5.072	350/69	3700	3700	5500	13	17	6.0	26
591	81	102	6.9	1.4	C202_0051 EZ703U	200	350	5.072	350/69	3700	3700	5500	23	17	6.0	28
643	31	39	2.9	3.5	C202_0047 EZ404U	110	140	4.667	14/3	3700	3700	5500	4.1	17	6.0	22
643	34	36	3.1	3.2	C202_0047 EZ502U	110	140	4.667	14/3	3700	3700	5500	6.3	17	6.0	21
643	34	38	3.1	3.3	C202_0047 EZ701U	91	340	4.667	14/3	3700	3700	5500	9.6	17	6.0	23
643	44	50	4.1	2.5	C202_0047 EZ503U	110	140	4.667	14/3	3700	3700	5500	8.7	17	6.0	23
643	54	65	5.0	2.1	C202_0047 EZ702U	190	340	4.667	14/3	3700	3700	5500	15	17	6.0	26
643	61	72	5.6	1.8	C202_0047 EZ505U	200	340	4.667	14/3	3700	3700	5500	13	17	6.0	26
643	75	94	6.8	1.5	C202_0047 EZ703U	200	340	4.667	14/3	3700	3700	5500	23	17	6.0	28
710	28	35	3.1	3.5	C202_0042 EZ404U	98	120	4.226	486/115	3500	3500	5000	4.4	17	6.0	22
710	30	33	3.3	3.2	C202_0042 EZ502U	98	120	4.226	486/115	3500	3500	5000	6.6	17	6.0	21
710	30	34	3.0	3.6	C202_0042 EZ701U	82	310	4.226	486/115	3500	3500	5000	9.9	17	6.0	23
710	40	46	4.3	2.5	C202_0042 EZ503U	98	120	4.226	486/115	3500	3500	5000	9.0	17	6.0	23
710	49	59	4.9	2.2	C202_0042 EZ702U	170	310	4.226	486/115	3500	3500	5000	15	17	6.0	26
710	55	66	5.5	1.9	C202_0042 EZ505U	200	310	4.226	486/115	3500	3500	5000	14	17	6.0	26
710	68	85	6.7	1.6	C202_0042 EZ703U	200	310	4.226	486/115	3500	3500	5000	23	17	6.0	28
772	26	32	3.2	3.5	C202_0039 EZ404U	91	110	3.888	486/125	3500	3500	5000	4.5	17	6.0	22
772	28	30	3.4	3.2	C202_0039 EZ502U	91	110	3.888	486/125	3500	3500	5000	6.7	17	6.0	21
772	28	31	3.0	3.8	C202_0039 EZ701U	75	280	3.888	486/125	3500	3500	5000	10	17	6.0	23
772	37	42	4.5	2.5	C202_0039 EZ503U	91	110	3.888	486/125	3500	3500	5000	9.1	17	6.0	23
772	45	54	4.8	2.3	C202_0039 EZ702U	150	280	3.888	486/125	3500	3500	5000	15	17	6.0	26
772	51	60	5.4	2.1	C202_0039 EZ505U	200	280	3.888	486/125	3500	3500	5000	14	17	6.0	26
772	62	78	6.6	1.7	C202_0039 EZ703U	200	280	3.888	486/125	3500	3500	5000	23	17	6.0	28
889	24	27	2.9	4.1	C202_0034 EZ701U	65	250	3.373	2250/667	3500	3500	5000	11	17	6.0	23
889	39	47	4.7	2.5	C202_0034 EZ702U	130	250	3.373	2250/667	3500	3500	5000	16	17	6.0	26
889	44	52	5.3	2.3	C202_0034 EZ505U	190	250	3.373	2250/667	3500	3500	5000	14	17	6.0	26
889	54	68	6.5	1.9	C202_0034 EZ703U	190	250	3.373	2250/667	3500	3500	5000	24	17	6.0	28
967	22	25	2.9	4.4	C202_0031 EZ701U	60	230	3.103	90/29	3500	3500	5000	11	17	6.0	23
967	36	43	4.6	2.7	C202_0031 EZ702U	120	230	3.103	90/29	3500	3500	5000	16	17	6.0	26
967	41	48	5.2	2.4	C202_0031 EZ505U	180	230	3.103	90/29	3500	3500	5000	14	17	6.0	26
967	50	63	6.4	2.0	C202_0031 EZ703U	180	230	3.103	90/29	3500	3500	5000	24	17	6.0	28
1115	19	22	2.8	4.8	C202_0027 EZ701U	52	200	2.690	495/184	3000	3000	4500	11	17	6.0	23
1115	31	38	4.5	3.0	C202_0027 EZ702U	110	200	2.690	495/184	3000	3000	4500	17	17	6.0	26
1115	35	42	5.1	2.6	C202_0027 EZ505U	160	200	2.690	495/184	3000	3000	4500	15	17	6.0	26
1115	43	54	6.2	2.2	C202_0027 EZ703U	160	200	2.690	495/184	3000	3000	4500	24	17	6.0	28
1212	29	35	4.5	3.1	C202_0025 EZ702U	98	180	2.475	99/40	3000	3000	4500	17	17	6.0	26
1212	32	38	5.0	2.8	C202_0025 EZ505U	140	180	2.475	99/40	3000	3000	4500	15	17	6.0	26
1212	40	50	6.1	2.3	C202_0025 EZ703U	140	180	2.475	99/40	3000	3000	4500	25	17	6.0	28
1374	25	31	4.4	3.4	C202_0022 EZ702U	87	160	2.184	2160/989	3000	3000	4500	17	17	6.0	26
1374	29	34	4.9	3.0	C202_0022 EZ505U	130	160	2.184	2160/989	3000	3000	4500	16	17	6.0	26
1374	35	44	6.0	2.5	C202_0022 EZ703U	130	160	2.184	2160/989	3000	3000	4500	25	17	6.0	28
1374	45	64	7.8	1.9	C202_0022 EZ705U	160	350	2.184	2160/989	3000	3000	4500	38	17	6.0	33
1493	23	28	4.3	3.6	C202_0020 EZ702U	80	150	2.009	432/215	3000	3000	4500	18	17	6.0	26
1493	26	31	4.9	3.2	C202_0020 EZ505U	120	150	2.009	432/215	3000	3000	4500	16	17	6.0	26
1493	32	41	5.9	2.6	C202_0020 EZ703U	120	150	2.009	432/215	3000	3000	4500	26	17	6.0	28
1493	42	59	7.7	2.0	C202_0020 EZ705U	160	350	2.009	432/215	3000	3000	4500	38	17	6.0	33
C2 (n_{1N} = 4500 rpm, $M_{2acc,max}$ = 230 Nm)																
383	108	175	4.1	1.6	C202_0120 EZ505U	230	400	11.76	294/25	3500	3500	5000	13	14	8.3	26
439	95	152	4.0	1.7	C202_0105 EZ505U	230	400	10.26	513/50	3500	3500	5000	13	14	8.3	26
479	87	139	4.0	1.8	C202_0094 EZ505U	230	400	9.387	2450/261	3500	3500	5000	14	14	8.3	26
549	75	122	3.9	2.0	C202_0082 EZ505U	230	400	8.190	475/58	3500	3500	5000	14	14	8.3	26
549	96	159	5.0	1.6	C202_0082 EZ703U	230	400	8.190	475/58	3500	3500	5000	23	14	8.3	28
577	72	116	4.9	1.6	C202_0078 EZ505U	200	350	7.800	39/5	4000	4000	6500	13	17	6.0	26
577	92	151	6.2	1.3	C202_0078 EZ703U	200	350	7.800	39/5	4000	4000	6500	22	17	6.0	28
715	58	93	4.7	1.9	C202_0063 EZ505U	200	350	6.295	3330/529	3700	3700	5500	13	17	6.0	26
715	74	122	6.0	1.5	C202_0063 EZ703U	200	350	6.295	3330/529	3700	3700	5500	22	17	6.0	28
777	53	86	4.7	2.0	C202_0058 EZ505U	200	350	5.791	666/115	3700	3700	5500	13	17	6.0	26

n_{2N} [rpm]	M_{2N} [Nm]	$M_{2,0}$ [Nm]	a_{th}	S	Type	M_{2acc} [Nm]	M_{2NOT} [Nm]	i	i_{exakt}	n_{1maxDB} EL1,2,3,4 [rpm]	n_{1maxDB} EL5,6 [rpm]	n_{1maxZB} [rpm]	J_1 [kgcm²]	$\Delta\varphi_2$ [arcmin]	C_2 [Nm/arcmin]	m [kg]
C2 (n_{1N} = 4500 rpm, $M_{2acc,max}$ = 230 Nm)																
777	68	112	5.9	1.5	C202_0058 EZ703U	200	350	5.791	666/115	3700	3700	5500	22	17	6.0	28
887	47	75	4.6	2.1	C202_0051 EZ505U	200	350	5.072	350/69	3700	3700	5500	13	17	6.0	26
887	60	98	5.8	1.7	C202_0051 EZ703U	200	350	5.072	350/69	3700	3700	5500	23	17	6.0	28
964	43	69	4.5	2.3	C202_0047 EZ505U	200	340	4.667	14/3	3700	3700	5500	13	17	6.0	26
964	55	91	5.7	1.8	C202_0047 EZ703U	200	340	4.667	14/3	3700	3700	5500	23	17	6.0	28
1065	39	63	4.4	2.4	C202_0042 EZ505U	200	310	4.226	486/115	3500	3500	5000	14	17	6.0	26
1065	50	82	5.6	1.9	C202_0042 EZ703U	200	310	4.226	486/115	3500	3500	5000	23	17	6.0	28
1157	36	58	4.4	2.6	C202_0039 EZ505U	200	280	3.888	486/125	3500	3500	5000	14	17	6.0	26
1157	46	75	5.6	2.0	C202_0039 EZ703U	200	280	3.888	486/125	3500	3500	5000	23	17	6.0	28
1334	31	50	4.3	2.8	C202_0034 EZ505U	190	250	3.373	2250/667	3500	3500	5000	14	17	6.0	26
1334	40	65	5.4	2.2	C202_0034 EZ703U	190	250	3.373	2250/667	3500	3500	5000	24	17	6.0	28
1450	29	46	4.2	3.0	C202_0031 EZ505U	180	230	3.103	90/29	3500	3500	5000	14	17	6.0	26
1450	36	60	5.4	2.3	C202_0031 EZ703U	180	230	3.103	90/29	3500	3500	5000	24	17	6.0	28
1673	25	40	4.1	3.3	C202_0027 EZ505U	160	200	2.690	495/184	3000	3000	4500	15	17	6.0	26
1673	32	52	5.2	2.6	C202_0027 EZ703U	160	200	2.690	495/184	3000	3000	4500	24	17	6.0	28
1818	23	37	4.0	3.5	C202_0025 EZ505U	140	180	2.475	99/40	3000	3000	4500	15	17	6.0	26
1818	29	48	5.2	2.7	C202_0025 EZ703U	140	180	2.475	99/40	3000	3000	4500	25	17	6.0	28
2060	20	32	4.0	3.8	C202_0022 EZ505U	130	160	2.184	2160/989	3000	3000	4500	16	17	6.0	26
2060	26	42	5.1	2.9	C202_0022 EZ703U	130	160	2.184	2160/989	3000	3000	4500	25	17	6.0	28
2060	35	64	6.8	2.2	C202_0022 EZ705U	160	350	2.184	2160/989	3000	3000	4500	38	17	6.0	33
2240	19	30	3.9	4.0	C202_0020 EZ505U	120	150	2.009	432/215	3000	3000	4500	16	17	6.0	26
2240	24	39	5.0	3.1	C202_0020 EZ703U	120	150	2.009	432/215	3000	3000	4500	26	17	6.0	28
2240	32	58	6.7	2.3	C202_0020 EZ705U	160	350	2.009	432/215	3000	3000	4500	38	17	6.0	33
C2 (n_{1N} = 6000 rpm, $M_{2acc,max}$ = 230 Nm)																
65	133	148	1.5	1.5	C203_0920 EZ302U	230	400	92.40	29939/324	4000	4000	6500	0.36	14	8.3	22
74	116	129	1.4	1.7	C203_0810 EZ302U	230	400	80.62	11609/144	4000	4000	6500	0.36	14	8.3	22
74	151	173	1.9	1.3	C203_0810 EZ303U	230	400	80.62	11609/144	4000	4000	6500	0.47	14	8.3	22
85	102	115	1.3	2.0	C202_0700 EZ302U	230	300	70.32	7595/108	4000	4000	6500	0.36	14	8.3	17
85	134	153	1.8	1.5	C202_0700 EZ303U	230	300	70.32	7595/108	4000	4000	6500	0.47	14	8.3	18
98	89	100	1.3	2.1	C202_0610 EZ302U	210	260	61.35	2945/48	4000	4000	6500	0.36	14	8.3	17
98	117	134	1.8	1.6	C202_0610 EZ303U	210	260	61.35	2945/48	4000	4000	6500	0.47	14	8.3	18
106	126	153	1.8	1.6	C202_0560 EZ401U	230	400	56.42	1862/33	4000	4000	6500	1.0	14	8.3	19
122	110	134	1.7	1.8	C202_0490 EZ401U	230	400	49.23	1083/22	4000	4000	6500	1.0	14	8.3	19
128	104	127	1.7	1.9	C202_0470 EZ401U	230	400	46.82	2107/45	4000	4000	6500	1.1	14	8.3	19
147	91	111	1.6	2.2	C202_0410 EZ401U	230	400	40.85	817/20	4000	4000	6500	1.1	14	8.3	19
147	135	174	2.3	1.5	C202_0410 EZ501U	230	400	40.85	817/20	4000	4000	6500	3.0	14	8.3	20
171	78	96	1.5	2.5	C202_0350 EZ401U	230	400	35.18	1372/39	4000	4000	6500	1.2	14	8.3	19
171	116	150	2.2	1.7	C202_0350 EZ501U	230	400	35.18	1372/39	4000	4000	6500	3.1	14	8.3	20
171	119	167	2.2	1.7	C202_0350 EZ402U	230	400	35.18	1372/39	4000	4000	6500	1.9	14	8.3	20
195	68	83	1.4	2.9	C202_0310 EZ401U	230	400	30.69	399/13	4000	4000	6500	1.2	14	8.3	19
195	101	131	2.0	2.0	C202_0310 EZ501U	230	400	30.69	399/13	4000	4000	6500	3.1	14	8.3	20
195	104	146	2.1	1.9	C202_0310 EZ402U	230	400	30.69	399/13	4000	4000	6500	1.9	14	8.3	20
212	63	77	1.3	3.2	C202_0280 EZ401U	230	400	28.24	4067/144	4000	4000	6500	1.2	14	8.3	19
212	93	121	1.9	2.1	C202_0280 EZ501U	230	400	28.24	4067/144	4000	4000	6500	3.2	14	8.3	20
212	96	134	2.0	2.1	C202_0280 EZ402U	230	400	28.24	4067/144	4000	4000	6500	1.9	14	8.3	20
243	55	67	1.2	3.6	C202_0250 EZ401U	200	400	24.64	1577/64	4000	4000	6500	1.3	14	8.3	19
243	81	105	1.8	2.4	C202_0250 EZ501U	230	400	24.64	1577/64	4000	4000	6500	3.2	14	8.3	20
243	84	117	1.9	2.3	C202_0250 EZ402U	230	400	24.64	1577/64	4000	4000	6500	2.0	14	8.3	20
254	53	64	1.2	3.7	C202_0240 EZ401U	190	400	23.59	637/27	4000	4000	6500	1.3	14	8.3	19
254	78	101	1.8	2.5	C202_0240 EZ501U	230	400	23.59	637/27	4000	4000	6500	3.3	14	8.3	20
254	80	112	1.9	2.4	C202_0240 EZ402U	230	400	23.59	637/27	4000	4000	6500	2.0	14	8.3	20
292	46	56	1.2	4.0	C202_0210 EZ401U	170	400	20.58	247/12	4000	4000	6500	1.4	14	8.3	19
292	68	88	1.8	2.7	C202_0210 EZ501U	230	400	20.58	247/12	4000	4000	6500	3.3	14	8.3	20
292	70	98	1.8	2.6	C202_0210 EZ402U	230	400	20.58	247/12	4000	4000	6500	2.1	14	8.3	20
292	104	156	2.7	1.8	C202_0210 EZ502U	230	400	20.58	247/12	4000	4000	6500	5.6	14	8.3	21
292	104	158	2.7	1.8	C202_0210 EZ701U	230	400	20.58	247/12	4000	4000	6500	8.9	14	8.3	23
292	116	168	3.0	1.6	C202_0210 EZ404U	230	400	20.58	247/12	4000	4000	6500	3.4	14	8.3	22
769	26	33	1.9	4.1	C202_0078 EZ501U	120	220	7.800	39/5	4000	4000	6500	3.4	17	6.0	20
769	26	37	2.0	4.0	C202_0078 EZ402U	120	220	7.800	39/5	4000	4000	6500	2.1	17	6.0	20
769	39	59	3.0	2.7	C202_0078 EZ502U	170	220	7.800	39/5	4000	4000	6500	5.7	17	6.0	21
769	39	60	3.0	2.7	C202_0078 EZ701U	150	350	7.800	39/5	4000	4000	6500	9.0	17	6.0	23
769	44	64	3.3	2.4	C202_0078 EZ404U	170	220	7.800	39/5	4000	4000	6500	3.5	17	6.0	22
769	47	80	3.5	2.2	C202_0078 EZ503U	170	220	7.800	39/5	4000	4000	6500	8.1	17	6.0	23
769	54	108	4.1	1.9	C202_0078 EZ702U	200	350	7.800	39/5	4000	4000	6500	14	17	6.0	26

n_{2N} [rpm]	M_{2N} [Nm]	$M_{2,0}$ [Nm]	a_{th}	S	Type	M_{2acc} [Nm]	M_{2NOT} [Nm]	i	i_{exakt}	n_{1maxDB} EL1,2,3,4 [rpm]	n_{1maxDB} EL5,6 [rpm]	n_{1maxZB} [rpm]	J_1 [kgcm²]	$\Delta\varphi_2$ [arcmin]	C_2 [Nm/arcmin]	m [kg]
C3 (n_{1N} = 2000 rpm, $M_{2acc,max}$ = 320 Nm)																
516	164	249	10	1.2	C302_0039 EZ805U	320	550	3.878	190/49	3200	3200	4800	135	16	7.1	66
597	142	215	10	1.3	C302_0034 EZ805U	310	550	3.352	429/128	3200	3200	4800	136	16	7.1	66
643	132	199	9.8	1.4	C302_0031 EZ805U	300	550	3.110	1045/336	3200	3200	4800	136	16	7.1	66
739	115	173	9.6	1.5	C302_0027 EZ805U	290	520	2.705	1677/620	2700	2700	4000	138	16	7.1	66
797	106	161	9.5	1.6	C302_0025 EZ805U	280	490	2.510	1634/651	2700	2700	4000	138	16	7.1	66
919	92	140	9.3	1.8	C302_0022 EZ805U	270	420	2.177	468/215	2700	2700	4000	139	16	7.1	66
990	86	130	9.2	1.8	C302_0020 EZ805U	260	390	2.020	608/301	2700	2700	4000	140	16	7.1	66
C3 (n_{1N} = 3000 rpm, $M_{2acc,max}$ = 400 Nm)																
22	209	220	1.2	1.7	C303_1370 EZ302U	350	700	137.2	59267/432	3800	3800	6000	0.36	13	8.7	26
27	167	176	1.1	2.1	C303_1100 EZ302U	350	700	109.6	94705/864	3800	3800	6000	0.37	13	8.7	26
27	217	229	1.4	1.6	C303_1100 EZ303U	350	700	109.6	94705/864	3800	3800	6000	0.48	13	8.7	27
33	140	148	1.0	2.5	C303_0920 EZ302U	350	590	91.93	39715/432	3800	3800	6000	0.38	13	8.7	26
33	182	192	1.3	1.9	C303_0920 EZ303U	350	590	91.93	39715/432	3800	3800	6000	0.49	13	8.7	27
33	246	264	1.8	1.4	C303_0920 EZ401U	350	590	91.93	39715/432	3800	3800	6000	1.0	13	8.7	28
37	124	131	0.9	2.8	C303_0810 EZ302U	390	520	81.47	1222/15	3800	3800	6000	0.38	13	8.7	26
37	161	171	1.2	2.2	C303_0810 EZ303U	400	520	81.47	1222/15	3800	3800	6000	0.49	13	8.7	27
37	218	234	1.7	1.6	C303_0810 EZ401U	400	520	81.47	1222/15	3800	3800	6000	1.0	13	8.7	28
48	258	282	2.4	1.3	C302_0620 EZ501U	400	660	61.92	1548/25	3800	3800	6000	3.0	13	8.7	25
53	234	256	2.1	1.5	C302_0560 EZ501U	350	700	56.14	1235/22	3800	3800	6000	3.1	13	8.7	25
60	207	227	2.0	1.7	C302_0500 EZ501U	400	700	49.75	2736/55	3800	3800	6000	3.1	13	8.7	25
64	195	213	2.0	1.8	C302_0470 EZ501U	350	700	46.67	140/3	3800	3800	6000	3.1	13	8.7	25
73	172	189	1.8	2.0	C302_0410 EZ501U	400	700	41.35	2688/65	3800	3800	6000	3.1	13	8.7	25
86	146	160	1.7	2.4	C302_0350 EZ501U	350	700	35.03	1261/36	3800	3800	6000	3.3	13	8.7	25
97	129	142	1.6	2.7	C302_0310 EZ501U	400	700	31.04	776/25	3800	3800	6000	3.3	13	8.7	25
97	223	241	2.7	1.6	C302_0310 EZ502U	400	700	31.04	776/25	3800	3800	6000	5.6	13	8.7	27
97	223	250	2.7	1.6	C302_0310 EZ701U	400	700	31.04	776/25	3800	3800	6000	8.9	13	8.7	28
107	117	128	1.5	3.0	C302_0280 EZ501U	350	700	27.99	2015/72	3800	3800	6000	3.4	13	8.7	25
107	201	217	2.6	1.7	C302_0280 EZ502U	350	700	27.99	2015/72	3800	3800	6000	5.7	13	8.7	27
107	201	225	2.6	1.7	C302_0280 EZ701U	350	700	27.99	2015/72	3800	3800	6000	9.0	13	8.7	28
121	103	113	1.4	3.4	C302_0250 EZ501U	380	670	24.80	124/5	3800	3800	6000	3.4	13	8.7	25
121	178	192	2.5	2.0	C302_0250 EZ502U	400	670	24.80	124/5	3800	3800	6000	5.7	13	8.7	27
121	178	200	2.5	2.0	C302_0250 EZ701U	400	700	24.80	124/5	3800	3800	6000	9.0	13	8.7	28
121	233	267	3.2	1.5	C302_0250 EZ503U	400	670	24.80	124/5	3800	3800	6000	8.1	13	8.7	28
128	98	107	1.4	3.6	C302_0230 EZ501U	350	680	23.47	845/36	3800	3800	6000	3.6	13	8.7	25
128	168	182	2.4	2.1	C302_0230 EZ502U	350	680	23.47	845/36	3800	3800	6000	5.9	13	8.7	27
128	168	189	2.4	2.1	C302_0230 EZ701U	350	700	23.47	845/36	3800	3800	6000	9.2	13	8.7	28
128	221	253	3.1	1.6	C302_0230 EZ503U	350	680	23.47	845/36	3800	3800	6000	8.3	13	8.7	28
144	87	95	1.3	4.0	C302_0210 EZ501U	320	610	20.80	104/5	3800	3800	6000	3.6	13	8.7	25
144	149	161	2.2	2.3	C302_0210 EZ502U	400	610	20.80	104/5	3800	3800	6000	5.9	13	8.7	27
144	149	167	2.2	2.3	C302_0210 EZ701U	400	700	20.80	104/5	3800	3800	6000	9.2	13	8.7	28
144	196	224	2.9	1.8	C302_0210 EZ503U	400	610	20.80	104/5	3800	3800	6000	8.3	13	8.7	28
144	242	291	3.6	1.4	C302_0210 EZ702U	400	700	20.80	104/5	3800	3800	6000	14	13	8.7	31
171	126	141	2.1	2.7	C302_0175 EZ701U	340	700	17.54	1105/63	3500	3500	5500	9.6	13	8.7	28
171	204	245	3.4	1.7	C302_0175 EZ702U	350	700	17.54	1105/63	3500	3500	5500	15	13	8.7	31
193	112	125	2.1	2.9	C302_0155 EZ701U	300	700	15.54	544/35	3500	3500	5500	9.6	13	8.7	28
193	181	217	3.4	1.8	C302_0155 EZ702U	400	700	15.54	544/35	3500	3500	5500	15	13	8.7	31
193	204	241	3.8	1.6	C302_0155 EZ505U	400	700	15.54	544/35	3500	3500	5500	13	13	8.7	31
214	100	113	2.0	3.2	C302_0140 EZ701U	270	700	13.99	2015/144	3500	3500	5500	10	13	8.7	28
214	163	195	3.3	1.9	C302_0140 EZ702U	350	700	13.99	2015/144	3500	3500	5500	15	13	8.7	31
214	183	217	3.7	1.7	C302_0140 EZ505U	350	700	13.99	2015/144	3500	3500	5500	14	13	8.7	31
242	89	100	2.0	3.4	C302_0125 EZ701U	240	700	12.40	62/5	3500	3500	5500	10	13	8.7	28
242	144	173	3.2	2.1	C302_0125 EZ702U	400	700	12.40	62/5	3500	3500	5500	15	13	8.7	31
242	162	192	3.6	1.9	C302_0125 EZ505U	400	700	12.40	62/5	3500	3500	5500	14	13	8.7	31
242	198	250	4.4	1.5	C302_0125 EZ703U	400	700	12.40	62/5	3500	3500	5500	23	13	8.7	33
258	83	93	2.0	3.6	C302_0115 EZ701U	230	700	11.61	325/28	3200	3200	4800	10	13	8.7	28
258	135	162	3.2	2.2	C302_0115 EZ702U	350	700	11.61	325/28	3200	3200	4800	16	13	8.7	31
258	152	180	3.6	2.0	C302_0115 EZ505U	350	700	11.61	325/28	3200	3200	4800	14	13	8.7	31
258	186	234	4.4	1.6	C302_0115 EZ703U	350	700	11.61	325/28	3200	3200	4800	24	13	8.7	33
292	74	83	1.9	3.9	C302_0105 EZ701U	200	700	10.29	72/7	3200	3200	4800	10	13	8.7	28
292	120	144	3.1	2.4	C302_0105 EZ702U	400	700	10.29	72/7	3200	3200	4800	16	13	8.7	31
292	135	160	3.5	2.1	C302_0105 EZ505U	400	700	10.29	72/7	3200	3200	4800	14	13	8.7	31
292	165	208	4.3	1.7	C302_0105 EZ703U	400	700	10.29	72/7	3200	3200	4800	24	13	8.7	33
292	213	301	5.6	1.3	C302_0105 EZ705U	400	700	10.29	72/7	3200	3200	4800	36	13	8.7	38
322	67	75	1.9	4.1	C302_0093 EZ701U	180	680	9.310	3575/384	3200	3200	4800	11	13	8.7	28

n_{2N} [rpm]	M_{2N} [Nm]	$M_{2,0}$ [Nm]	a_{th}	S	Type	M_{2acc} [Nm]	M_{2NOT} [Nm]	i	i_{exakt}	n_{1maxDB} EL1,2,3,4 [rpm]	n_{1maxDB} EL5,6 [rpm]	n_{1maxZB} [rpm]	J_1 [kgcm²]	$\Delta\varphi_2$ [arcmin]	C_2 [Nm/arcmin]	m [kg]
C3 (n_{1N} = 3000 rpm, $M_{2acc,max}$ = 400 Nm)																
322	108	130	3.1	2.6	C302_0093 EZ702U	350	680	9.310	3575/384	3200	3200	4800	16	13	8.7	31
322	122	144	3.5	2.3	C302_0093 EZ505U	350	680	9.310	3575/384	3200	3200	4800	15	13	8.7	31
322	149	188	4.2	1.9	C302_0093 EZ703U	350	680	9.310	3575/384	3200	3200	4800	24	13	8.7	33
364	59	66	1.9	4.5	C302_0083 EZ701U	160	600	8.250	33/4	3200	3200	4800	11	13	8.7	28
364	96	115	3.0	2.8	C302_0083 EZ702U	330	600	8.250	33/4	3200	3200	4800	16	13	8.7	31
364	108	128	3.4	2.5	C302_0083 EZ505U	400	600	8.250	33/4	3200	3200	4800	15	13	8.7	31
364	132	166	4.1	2.0	C302_0083 EZ703U	400	600	8.250	33/4	3200	3200	4800	24	13	8.7	33
364	170	242	5.4	1.6	C302_0083 EZ705U	400	700	8.250	33/4	3200	3200	4800	37	13	8.7	38
364	178	297	5.6	1.5	C302_0083 EZ802U	400	700	8.250	33/4	3200	3200	4800	61	13	8.7	47
383	56	61	2.6	3.2	C302_0078 EZ502U	180	230	7.841	494/63	3800	3800	6000	6.1	16	7.1	27
383	56	63	2.2	3.9	C302_0078 EZ701U	150	470	7.841	494/63	3800	3800	6000	9.4	16	7.1	28
383	74	84	3.5	2.5	C302_0078 EZ503U	180	230	7.841	494/63	3800	3800	6000	8.5	16	7.1	28
383	91	110	3.6	2.4	C302_0078 EZ702U	310	470	7.841	494/63	3800	3800	6000	15	16	7.1	31
383	103	122	4.1	2.1	C302_0078 EZ505U	330	470	7.841	494/63	3800	3800	6000	13	16	7.1	31
383	125	158	5.0	1.7	C302_0078 EZ703U	330	470	7.841	494/63	3800	3800	6000	22	16	7.1	33
383	162	230	6.4	1.3	C302_0078 EZ705U	330	550	7.841	494/63	3800	3800	6000	35	16	7.1	38
475	45	51	2.1	4.5	C302_0063 EZ701U	120	430	6.314	221/35	3500	3500	5500	9.9	16	7.1	28
475	73	88	3.5	2.7	C302_0063 EZ702U	250	430	6.314	221/35	3500	3500	5500	15	16	7.1	31
475	83	98	3.9	2.4	C302_0063 EZ505U	330	430	6.314	221/35	3500	3500	5500	14	16	7.1	31
475	101	127	4.8	2.0	C302_0063 EZ703U	330	430	6.314	221/35	3500	3500	5500	23	16	7.1	33
475	130	185	6.2	1.5	C302_0063 EZ705U	330	550	6.314	221/35	3500	3500	5500	35	16	7.1	38
475	137	227	6.5	1.5	C302_0063 EZ802U	330	550	6.314	221/35	3500	3500	5500	59	16	7.1	47
512	42	47	2.1	4.7	C302_0059 EZ701U	110	400	5.859	2584/441	3500	3500	5500	9.9	16	7.1	28
512	68	82	3.4	2.9	C302_0059 EZ702U	230	400	5.859	2584/441	3500	3500	5500	15	16	7.1	31
512	77	91	3.9	2.6	C302_0059 EZ505U	320	400	5.859	2584/441	3500	3500	5500	14	16	7.1	31
512	94	118	4.7	2.1	C302_0059 EZ703U	320	400	5.859	2584/441	3500	3500	5500	23	16	7.1	33
512	121	172	6.1	1.6	C302_0059 EZ705U	330	550	5.859	2584/441	3500	3500	5500	35	16	7.1	38
512	127	211	6.4	1.6	C302_0059 EZ802U	330	550	5.859	2584/441	3500	3500	5500	59	16	7.1	47
595	59	70	3.4	3.2	C302_0050 EZ702U	200	370	5.038	403/80	3500	3500	5500	16	16	7.1	31
595	66	78	3.8	2.8	C302_0050 EZ505U	290	370	5.038	403/80	3500	3500	5500	14	16	7.1	31
595	81	102	4.6	2.3	C302_0050 EZ703U	290	370	5.038	403/80	3500	3500	5500	24	16	7.1	33
595	104	148	6.0	1.8	C302_0050 EZ705U	330	550	5.038	403/80	3500	3500	5500	36	16	7.1	38
595	109	181	6.2	1.7	C302_0050 EZ802U	330	550	5.038	403/80	3500	3500	5500	60	16	7.1	47
595	130	236	7.4	1.4	C302_0050 EZ803U	330	550	5.038	403/80	3500	3500	5500	85	16	7.1	53
642	54	65	3.3	3.4	C302_0047 EZ702U	190	340	4.675	589/126	3500	3500	5500	16	16	7.1	31
642	61	73	3.7	3.0	C302_0047 EZ505U	270	340	4.675	589/126	3500	3500	5500	14	16	7.1	31
642	75	94	4.6	2.4	C302_0047 EZ703U	270	340	4.675	589/126	3500	3500	5500	24	16	7.1	33
642	97	137	5.9	1.9	C302_0047 EZ705U	330	550	4.675	589/126	3500	3500	5500	36	16	7.1	38
642	101	168	6.2	1.8	C302_0047 EZ802U	330	550	4.675	589/126	3500	3500	5500	60	16	7.1	47
642	121	219	7.3	1.5	C302_0047 EZ803U	330	550	4.675	589/126	3500	3500	5500	85	16	7.1	53
718	49	58	3.2	3.6	C302_0042 EZ702U	170	300	4.179	117/28	3200	3200	4800	16	16	7.1	31
718	55	65	3.7	3.2	C302_0042 EZ505U	240	300	4.179	117/28	3200	3200	4800	15	16	7.1	31
718	67	84	4.5	2.6	C302_0042 EZ703U	240	300	4.179	117/28	3200	3200	4800	24	16	7.1	33
718	86	122	5.8	2.0	C302_0042 EZ705U	330	550	4.179	117/28	3200	3200	4800	37	16	7.1	38
718	90	150	6.0	1.9	C302_0042 EZ802U	330	550	4.179	117/28	3200	3200	4800	61	16	7.1	47
718	108	195	7.2	1.6	C302_0042 EZ803U	330	550	4.179	117/28	3200	3200	4800	86	16	7.1	53
774	45	54	3.2	3.8	C302_0039 EZ702U	150	280	3.878	190/49	3200	3200	4800	16	16	7.1	31
774	51	60	3.6	3.4	C302_0039 EZ505U	230	280	3.878	190/49	3200	3200	4800	15	16	7.1	31
774	62	78	4.4	2.8	C302_0039 EZ703U	230	280	3.878	190/49	3200	3200	4800	24	16	7.1	33
774	80	114	5.7	2.1	C302_0039 EZ705U	320	550	3.878	190/49	3200	3200	4800	37	16	7.1	38
774	84	140	6.0	2.0	C302_0039 EZ802U	320	550	3.878	190/49	3200	3200	4800	61	16	7.1	47
774	100	181	7.1	1.7	C302_0039 EZ803U	320	550	3.878	190/49	3200	3200	4800	86	16	7.1	53
895	39	47	3.1	4.2	C302_0034 EZ702U	130	240	3.352	429/128	3200	3200	4800	17	16	7.1	31
895	44	52	3.5	3.7	C302_0034 EZ505U	200	240	3.352	429/128	3200	3200	4800	16	16	7.1	31
895	54	68	4.3	3.0	C302_0034 EZ703U	200	240	3.352	429/128	3200	3200	4800	25	16	7.1	33
895	69	98	5.6	2.4	C302_0034 EZ705U	310	550	3.352	429/128	3200	3200	4800	37	16	7.1	38
895	73	121	5.8	2.3	C302_0034 EZ802U	310	550	3.352	429/128	3200	3200	4800	62	16	7.1	47
895	86	157	6.9	1.9	C302_0034 EZ803U	310	550	3.352	429/128	3200	3200	4800	87	16	7.1	53
965	36	43	3.1	4.4	C302_0031 EZ702U	120	230	3.110	1045/336	3200	3200	4800	17	16	7.1	31
965	41	48	3.5	3.9	C302_0031 EZ505U	180	230	3.110	1045/336	3200	3200	4800	16	16	7.1	31
965	50	63	4.3	3.2	C302_0031 EZ703U	180	230	3.110	1045/336	3200	3200	4800	25	16	7.1	33
965	64	91	5.5	2.5	C302_0031 EZ705U	300	550	3.110	1045/336	3200	3200	4800	38	16	7.1	38
965	67	112	5.7	2.4	C302_0031 EZ802U	300	550	3.110	1045/336	3200	3200	4800	62	16	7.1	47
965	80	145	6.9	2.0	C302_0031 EZ803U	300	550	3.110	1045/336	3200	3200	4800	87	16	7.1	53

n_{2N} [rpm]	M_{2N} [Nm]	$M_{2,0}$ [Nm]	a_{th}	S	Type	M_{2acc} [Nm]	M_{2NOT} [Nm]	i	i_{exakt}	n_{1maxDB} EL1,2,3,4 [rpm]	n_{1maxDB} EL5,6 [rpm]	n_{1maxZB} [rpm]	J_1 [kgcm²]	$\Delta\varphi_2$ [arcmin]	C_2 [Nm/arcmin]	m [kg]
C3 (n_{1N} = 3000 rpm, $M_{2acc,max}$ = 400 Nm)																
1109	56	79	5.4	2.7	C302_0027 EZ705U	270	520	2.705	1677/620	2700	2700	4000	39	16	7.1	38
1109	59	97	5.6	2.6	C302_0027 EZ802U	260	520	2.705	1677/620	2700	2700	4000	63	16	7.1	47
1109	70	126	6.7	2.2	C302_0027 EZ803U	290	520	2.705	1677/620	2700	2700	4000	88	16	7.1	53
1195	52	74	5.3	2.9	C302_0025 EZ705U	250	490	2.510	1634/651	2700	2700	4000	39	16	7.1	38
1195	54	90	5.5	2.7	C302_0025 EZ802U	240	490	2.510	1634/651	2700	2700	4000	63	16	7.1	47
1195	65	117	6.6	2.3	C302_0025 EZ803U	280	490	2.510	1634/651	2700	2700	4000	89	16	7.1	53
1378	45	64	5.2	3.1	C302_0022 EZ705U	220	420	2.177	468/215	2700	2700	4000	41	16	7.1	38
1378	47	78	5.4	3.0	C302_0022 EZ802U	210	420	2.177	468/215	2700	2700	4000	65	16	7.1	47
1378	56	102	6.5	2.5	C302_0022 EZ803U	270	420	2.177	468/215	2700	2700	4000	90	16	7.1	53
1485	42	59	5.1	3.3	C302_0020 EZ705U	200	390	2.020	608/301	2700	2700	4000	41	16	7.1	38
1485	44	73	5.3	3.2	C302_0020 EZ802U	200	390	2.020	608/301	2700	2700	4000	65	16	7.1	47
1485	52	94	6.4	2.6	C302_0020 EZ803U	260	390	2.020	608/301	2700	2700	4000	90	16	7.1	53
C3 (n_{1N} = 4500 rpm, $M_{2acc,max}$ = 400 Nm)																
216	192	309	3.2	1.7	C302_0210 EZ505U	400	700	20.80	104/5	3800	3800	6000	13	13	8.7	31
257	162	260	3.1	1.9	C302_0175 EZ505U	350	700	17.54	1105/63	3500	3500	5500	13	13	8.7	31
290	143	231	3.0	2.0	C302_0155 EZ505U	400	700	15.54	544/35	3500	3500	5500	13	13	8.7	31
290	182	302	3.9	1.6	C302_0155 EZ703U	400	700	15.54	544/35	3500	3500	5500	23	13	8.7	33
322	129	208	3.0	2.2	C302_0140 EZ505U	350	700	13.99	2015/144	3500	3500	5500	14	13	8.7	31
363	114	184	2.9	2.3	C302_0125 EZ505U	400	700	12.40	62/5	3500	3500	5500	14	13	8.7	31
363	146	241	3.7	1.8	C302_0125 EZ703U	400	700	12.40	62/5	3500	3500	5500	23	13	8.7	33
388	107	172	2.9	2.4	C302_0115 EZ505U	350	700	11.61	325/28	3200	3200	4800	14	13	8.7	31
388	136	225	3.7	1.9	C302_0115 EZ703U	350	700	11.61	325/28	3200	3200	4800	24	13	8.7	33
437	95	153	2.8	2.6	C302_0105 EZ505U	400	700	10.29	72/7	3200	3200	4800	14	13	8.7	31
437	121	200	3.6	2.1	C302_0105 EZ703U	400	700	10.29	72/7	3200	3200	4800	24	13	8.7	33
437	164	299	4.9	1.5	C302_0105 EZ705U	400	700	10.29	72/7	3200	3200	4800	36	13	8.7	38
483	86	138	2.8	2.8	C302_0093 EZ505U	350	680	9.310	3575/384	3200	3200	4800	15	13	8.7	31
483	109	181	3.6	2.2	C302_0093 EZ703U	350	680	9.310	3575/384	3200	3200	4800	24	13	8.7	33
545	76	122	2.7	3.1	C302_0083 EZ505U	400	600	8.250	33/4	3200	3200	4800	15	13	8.7	31
545	84	276	3.0	2.8	C302_0083 EZ802U	400	700	8.250	33/4	3200	3200	4800	61	13	8.7	47
545	97	160	3.5	2.4	C302_0083 EZ703U	400	600	8.250	33/4	3200	3200	4800	24	13	8.7	33
545	131	240	4.7	1.8	C302_0083 EZ705U	400	700	8.250	33/4	3200	3200	4800	37	13	8.7	38
574	72	116	3.3	2.6	C302_0078 EZ505U	330	470	7.841	494/63	3800	3800	6000	13	16	7.1	31
574	92	152	4.2	2.1	C302_0078 EZ703U	330	470	7.841	494/63	3800	3800	6000	22	16	7.1	33
574	125	228	5.6	1.5	C302_0078 EZ705U	330	550	7.841	494/63	3800	3800	6000	35	16	7.1	38
713	58	94	3.2	3.0	C302_0063 EZ505U	330	430	6.314	221/35	3500	3500	5500	14	16	7.1	31
713	64	211	3.5	2.7	C302_0063 EZ802U	330	550	6.314	221/35	3500	3500	5500	59	16	7.1	47
713	74	122	4.0	2.4	C302_0063 EZ703U	330	430	6.314	221/35	3500	3500	5500	23	16	7.1	33
713	100	184	5.4	1.8	C302_0063 EZ705U	330	550	6.314	221/35	3500	3500	5500	35	16	7.1	38
768	54	87	3.1	3.2	C302_0059 EZ505U	320	400	5.859	2584/441	3500	3500	5500	14	16	7.1	31
768	60	196	3.4	2.9	C302_0059 EZ802U	330	550	5.859	2584/441	3500	3500	5500	59	16	7.1	47
768	69	114	4.0	2.5	C302_0059 EZ703U	320	400	5.859	2584/441	3500	3500	5500	23	16	7.1	33
768	93	170	5.4	1.8	C302_0059 EZ705U	330	550	5.859	2584/441	3500	3500	5500	35	16	7.1	38
893	46	75	3.0	3.5	C302_0050 EZ505U	290	370	5.038	403/80	3500	3500	5500	14	16	7.1	31
893	51	169	3.4	3.2	C302_0050 EZ802U	330	550	5.038	403/80	3500	3500	5500	60	16	7.1	47
893	59	98	3.9	2.8	C302_0050 EZ703U	290	370	5.038	403/80	3500	3500	5500	24	16	7.1	33
893	80	147	5.2	2.0	C302_0050 EZ705U	330	550	5.038	403/80	3500	3500	5500	36	16	7.1	38
963	43	69	3.0	3.7	C302_0047 EZ505U	270	340	4.675	589/126	3500	3500	5500	14	16	7.1	31
963	48	156	3.3	3.3	C302_0047 EZ802U	330	550	4.675	589/126	3500	3500	5500	60	16	7.1	47
963	55	91	3.8	2.9	C302_0047 EZ703U	270	340	4.675	589/126	3500	3500	5500	24	16	7.1	33
963	74	136	5.2	2.1	C302_0047 EZ705U	330	550	4.675	589/126	3500	3500	5500	36	16	7.1	38
1077	39	62	2.9	4.0	C302_0042 EZ505U	240	300	4.179	117/28	3200	3200	4800	15	16	7.1	31
1077	43	140	3.3	3.6	C302_0042 EZ802U	330	550	4.179	117/28	3200	3200	4800	61	16	7.1	47
1077	49	81	3.8	3.1	C302_0042 EZ703U	240	300	4.179	117/28	3200	3200	4800	24	16	7.1	33
1077	66	122	5.1	2.3	C302_0042 EZ705U	330	550	4.179	117/28	3200	3200	4800	37	16	7.1	38
1160	36	58	2.9	4.2	C302_0039 EZ505U	230	280	3.878	190/49	3200	3200	4800	15	16	7.1	31
1160	39	130	3.2	3.8	C302_0039 EZ802U	320	550	3.878	190/49	3200	3200	4800	61	16	7.1	47
1160	46	75	3.7	3.3	C302_0039 EZ703U	230	280	3.878	190/49	3200	3200	4800	24	16	7.1	33
1160	62	113	5.0	2.4	C302_0039 EZ705U	320	550	3.878	190/49	3200	3200	4800	37	16	7.1	38
1342	31	50	2.8	4.6	C302_0034 EZ505U	200	240	3.352	429/128	3200	3200	4800	16	16	7.1	31
1342	34	112	3.1	4.2	C302_0034 EZ802U	310	550	3.352	429/128	3200	3200	4800	62	16	7.1	47
1342	39	65	3.6	3.6	C302_0034 EZ703U	200	240	3.352	429/128	3200	3200	4800	25	16	7.1	33
1342	53	98	4.9	2.7	C302_0034 EZ705U	310	550	3.352	429/128	3200	3200	4800	37	16	7.1	38
1447	29	46	2.8	4.9	C302_0031 EZ505U	180	230	3.110	1045/336	3200	3200	4800	16	16	7.1	31
1447	32	104	3.1	4.4	C302_0031 EZ802U	300	550	3.110	1045/336	3200	3200	4800	62	16	7.1	47

n_{2N} [rpm]	M_{2N} [Nm]	$M_{2,0}$ [Nm]	a_{th}	S	Type	M_{2acc} [Nm]	M_{2NOT} [Nm]	i	i_{exakt}	n_{1maxDB} EL1,2,3,4 [rpm]	n_{1maxDB} EL5,6 [rpm]	n_{1maxZB} [rpm]	J_1 [kgcm²]	$\Delta\varphi_2$ [arcmin]	C_2 [Nm/arcmin]	m [kg]
C3 (n_{1N} = 4500 rpm, $M_{2acc,max}$ = 400 Nm)																
1447	37	60	3.6	3.8	C302_0031 EZ703U	180	230	3.110	1045/336	3200	3200	4800	25	16	7.1	33
1447	49	91	4.8	2.8	C302_0031 EZ705U	300	550	3.110	1045/336	3200	3200	4800	38	16	7.1	38
C3 (n_{1N} = 6000 rpm, $M_{2acc,max}$ = 400 Nm)																
44	197	220	1.2	1.8	C303_1370 EZ302U	350	700	137.2	59267/432	3800	3800	6000	0.36	13	8.7	26
55	157	176	1.0	2.2	C303_1100 EZ302U	350	700	109.6	94705/864	3800	3800	6000	0.37	13	8.7	26
55	205	236	1.3	1.7	C303_1100 EZ303U	350	700	109.6	94705/864	3800	3800	6000	0.48	13	8.7	27
65	132	148	1.0	2.5	C303_0920 EZ302U	350	590	91.93	39715/432	3800	3800	6000	0.38	13	8.7	26
65	172	198	1.3	1.9	C303_0920 EZ303U	350	590	91.93	39715/432	3800	3800	6000	0.49	13	8.7	27
65	202	246	1.5	1.7	C303_0920 EZ401U	350	590	91.93	39715/432	3800	3800	6000	1.0	13	8.7	28
74	117	131	1.0	2.5	C303_0810 EZ302U	390	520	81.47	1222/15	3800	3800	6000	0.38	13	8.7	26
74	153	175	1.4	1.9	C303_0810 EZ303U	400	520	81.47	1222/15	3800	3800	6000	0.49	13	8.7	27
74	179	218	1.6	1.7	C303_0810 EZ401U	400	520	81.47	1222/15	3800	3800	6000	1.0	13	8.7	28
97	204	264	1.9	1.6	C302_0620 EZ501U	400	660	61.92	1548/25	3800	3800	6000	3.0	13	8.7	25
107	185	240	1.7	1.9	C302_0560 EZ501U	350	700	56.14	1235/22	3800	3800	6000	3.1	13	8.7	25
121	164	212	1.6	2.1	C302_0500 EZ501U	400	700	49.75	2736/55	3800	3800	6000	3.1	13	8.7	25
129	154	199	1.5	2.3	C302_0470 EZ501U	350	700	46.67	140/3	3800	3800	6000	3.1	13	8.7	25
145	136	176	1.5	2.6	C302_0410 EZ501U	400	700	41.35	2688/65	3800	3800	6000	3.1	13	8.7	25
171	116	150	1.4	3.0	C302_0350 EZ501U	350	700	35.03	1261/36	3800	3800	6000	3.3	13	8.7	25
171	177	265	2.1	1.9	C302_0350 EZ502U	350	700	35.03	1261/36	3800	3800	6000	5.6	13	8.7	27
171	177	268	2.1	1.9	C302_0350 EZ701U	350	700	35.03	1261/36	3800	3800	6000	8.9	13	8.7	28
193	102	132	1.3	3.2	C302_0310 EZ501U	400	700	31.04	776/25	3800	3800	6000	3.3	13	8.7	25
193	157	235	2.1	2.1	C302_0310 EZ502U	400	700	31.04	776/25	3800	3800	6000	5.6	13	8.7	27
193	157	238	2.1	2.1	C302_0310 EZ701U	400	700	31.04	776/25	3800	3800	6000	8.9	13	8.7	28
214	92	119	1.3	3.4	C302_0280 EZ501U	350	700	27.99	2015/72	3800	3800	6000	3.4	13	8.7	25
214	141	212	2.0	2.2	C302_0280 EZ502U	350	700	27.99	2015/72	3800	3800	6000	5.7	13	8.7	27
214	141	214	2.0	2.2	C302_0280 EZ701U	350	700	27.99	2015/72	3800	3800	6000	9.0	13	8.7	28
242	82	106	1.3	3.7	C302_0250 EZ501U	380	670	24.80	124/5	3800	3800	6000	3.4	13	8.7	25
242	125	188	2.0	2.4	C302_0250 EZ502U	400	670	24.80	124/5	3800	3800	6000	5.7	13	8.7	27
242	125	190	2.0	2.4	C302_0250 EZ701U	400	700	24.80	124/5	3800	3800	6000	9.0	13	8.7	28
242	149	255	2.4	2.0	C302_0250 EZ503U	400	670	24.80	124/5	3800	3800	6000	8.1	13	8.7	28
256	77	100	1.3	3.9	C302_0230 EZ501U	350	680	23.47	845/36	3800	3800	6000	3.6	13	8.7	25
256	118	178	2.0	2.5	C302_0230 EZ502U	350	680	23.47	845/36	3800	3800	6000	5.9	13	8.7	27
256	118	180	2.0	2.5	C302_0230 EZ701U	350	700	23.47	845/36	3800	3800	6000	9.2	13	8.7	28
256	141	241	2.3	2.1	C302_0230 EZ503U	350	680	23.47	845/36	3800	3800	6000	8.3	13	8.7	28
288	69	89	1.3	4.2	C302_0210 EZ501U	320	610	20.80	104/5	3800	3800	6000	3.6	13	8.7	25
288	105	157	1.9	2.7	C302_0210 EZ502U	400	610	20.80	104/5	3800	3800	6000	5.9	13	8.7	27
288	105	159	1.9	2.7	C302_0210 EZ701U	400	700	20.80	104/5	3800	3800	6000	9.2	13	8.7	28
288	125	214	2.3	2.3	C302_0210 EZ503U	400	610	20.80	104/5	3800	3800	6000	8.3	13	8.7	28
288	145	289	2.7	2.0	C302_0210 EZ702U	400	700	20.80	104/5	3800	3800	6000	14	13	8.7	31
765	40	59	2.0	4.4	C302_0078 EZ502U	180	230	7.841	494/63	3800	3800	6000	6.1	16	7.1	27
765	40	60	2.0	4.4	C302_0078 EZ701U	150	470	7.841	494/63	3800	3800	6000	9.4	16	7.1	28
765	47	81	2.3	3.6	C302_0078 EZ503U	180	230	7.841	494/63	3800	3800	6000	8.5	16	7.1	28
765	55	109	2.7	3.1	C302_0078 EZ702U	310	470	7.841	494/63	3800	3800	6000	15	16	7.1	31
C4 (n_{1N} = 2000 rpm, $M_{2acc,max}$ = 540 Nm)																
340	250	378	8.2	1.3	C402_0059 EZ805U	540	850	5.891	377/64	3300	3300	5000	136	15	17	76
427	198	300	7.8	1.5	C402_0047 EZ805U	500	800	4.682	899/192	3300	3300	5000	137	15	17	76
514	165	250	7.6	1.7	C402_0039 EZ805U	470	710	3.894	841/216	2900	2900	4500	139	15	17	76
645	131	199	7.3	2.0	C402_0031 EZ805U	440	600	3.099	1537/496	2900	2900	4500	141	15	17	76
814	104	157	7.0	2.4	C402_0025 EZ805U	380	480	2.456	609/248	2500	2500	3500	145	15	17	76
1016	83	126	6.8	2.7	C402_0020 EZ805U	310	380	1.968	551/280	2500	2500	3500	150	15	17	76
C4 (n_{1N} = 3000 rpm, $M_{2acc,max}$ = 600 Nm)																
33	371	406	1.8	1.5	C403_0900 EZ501U	550	1100	90.32	8671/96	3500	3500	5500	3.2	12	22	40
37	332	363	1.7	1.7	C403_0810 EZ501U	600	1100	80.81	42021/520	3500	3500	5500	3.2	12	22	40
43	291	319	1.6	1.9	C402_0700 EZ501U	550	1070	69.88	559/8	3500	3500	5500	3.2	12	22	35
48	261	285	1.7	1.9	C402_0630 EZ501U	600	960	62.52	8127/130	3500	3500	5500	3.2	12	22	35
53	234	256	1.5	2.4	C402_0560 EZ501U	550	1040	56.10	9425/168	3500	3500	5500	3.3	12	22	35
60	209	229	1.4	2.6	C402_0500 EZ501U	600	930	50.19	1305/26	3500	3500	5500	3.3	12	22	35
60	360	389	2.4	1.5	C402_0500 EZ502U	600	930	50.19	1305/26	3500	3500	5500	5.6	12	22	37
60	360	404	2.4	1.5	C402_0500 EZ701U	600	930	50.19	1305/26	3500	3500	5500	8.9	12	22	39
64	195	213	1.3	2.8	C402_0470 EZ501U	550	930	46.67	140/3	3500	3500	5500	3.4	12	22	35
64	335	362	2.3	1.6	C402_0470 EZ502U	550	930	46.67	140/3	3500	3500	5500	5.7	12	22	37
64	335	376	2.3	1.6	C402_0470 EZ701U	550	1100	46.67	140/3	3500	3500	5500	9.0	12	22	39
72	174	190	1.3	3.2	C402_0420 EZ501U	600	840	41.75	7056/169	3500	3500	5500	3.5	12	22	35

n_{2N} [rpm]	M_{2N} [Nm]	$M_{2,0}$ [Nm]	a_{th}	S	Type	M_{2acc} [Nm]	M_{2NOT} [Nm]	i	i_{exakt}	n_{1maxDB} EL1,2,3,4 [rpm]	n_{1maxDB} EL5,6 [rpm]	n_{1maxZB} [rpm]	J_1 [kgcm²]	$\Delta\varphi_2$ [arcmin]	C_2 [Nm/arcmin]	m [kg]
C4 (n_{1N} = 3000 rpm, $M_{2acc,max}$ = 600 Nm)																
72	300	324	2.2	1.8	C402_0420 EZ502U	600	840	41.75	7056/169	3500	3500	5500	5.8	12	22	37
72	300	336	2.2	1.8	C402_0420 EZ701U	600	1100	41.75	7056/169	3500	3500	5500	9.1	12	22	39
72	393	450	2.9	1.4	C402_0420 EZ503U	600	840	41.75	7056/169	3500	3500	5500	8.1	12	22	38
86	145	159	1.2	3.8	C402_0350 EZ501U	540	790	34.82	975/28	3500	3500	5500	3.8	12	22	35
86	250	270	2.0	2.2	C402_0350 EZ502U	550	790	34.82	975/28	3500	3500	5500	6.1	12	22	37
86	250	280	2.0	2.2	C402_0350 EZ701U	550	1100	34.82	975/28	3500	3500	5500	9.4	12	22	39
86	328	375	2.6	1.7	C402_0350 EZ503U	550	790	34.82	975/28	3500	3500	5500	8.5	12	22	38
96	130	142	1.1	4.2	C402_0310 EZ501U	480	710	31.15	405/13	3500	3500	5500	3.8	12	22	35
96	224	242	1.9	2.5	C402_0310 EZ502U	570	710	31.15	405/13	3500	3500	5500	6.1	12	22	37
96	224	251	1.9	2.5	C402_0310 EZ701U	600	1100	31.15	405/13	3500	3500	5500	9.4	12	22	39
96	293	335	2.5	1.9	C402_0310 EZ503U	570	710	31.15	405/13	3500	3500	5500	8.5	12	22	38
96	363	435	3.1	1.5	C402_0310 EZ702U	600	1100	31.15	405/13	3500	3500	5500	15	12	22	41
108	200	224	1.8	2.8	C402_0280 EZ701U	540	1100	27.86	195/7	3500	3500	5500	9.8	12	22	39
108	324	389	2.9	1.7	C402_0280 EZ702U	550	1100	27.86	195/7	3500	3500	5500	15	12	22	41
120	179	201	1.7	3.1	C402_0250 EZ701U	480	1100	24.92	324/13	3500	3500	5500	9.8	12	22	39
120	290	348	2.7	1.9	C402_0250 EZ702U	600	1100	24.92	324/13	3500	3500	5500	15	12	22	41
120	326	387	3.1	1.7	C402_0250 EZ505U	600	1100	24.92	324/13	3500	3500	5500	13	12	22	41
128	168	188	1.6	3.3	C402_0230 EZ701U	450	1100	23.36	1495/64	3500	3500	5500	10	12	22	39
128	272	326	2.7	2.0	C402_0230 EZ702U	550	1100	23.36	1495/64	3500	3500	5500	15	12	22	41
128	306	363	3.0	1.8	C402_0230 EZ505U	550	1100	23.36	1495/64	3500	3500	5500	14	12	22	41
144	150	168	1.6	3.7	C402_0210 EZ701U	410	1100	20.90	4347/208	3500	3500	5500	10	12	22	39
144	243	292	2.5	2.3	C402_0210 EZ702U	600	1100	20.90	4347/208	3500	3500	5500	15	12	22	41
144	274	324	2.8	2.0	C402_0210 EZ505U	600	1100	20.90	4347/208	3500	3500	5500	14	12	22	41
144	334	422	3.5	1.6	C402_0210 EZ703U	600	1100	20.90	4347/208	3500	3500	5500	23	12	22	43
170	126	142	1.4	4.4	C402_0175 EZ701U	340	1100	17.60	845/48	3300	3300	5000	11	12	22	39
170	205	246	2.3	2.7	C402_0175 EZ702U	550	1100	17.60	845/48	3300	3300	5000	16	12	22	41
170	231	273	2.6	2.4	C402_0175 EZ505U	550	1100	17.60	845/48	3300	3300	5000	15	12	22	41
170	282	355	3.2	2.0	C402_0175 EZ703U	550	1100	17.60	845/48	3300	3300	5000	24	12	22	43
190	113	127	1.3	4.9	C402_0160 EZ701U	310	1070	15.75	63/4	3300	3300	5000	11	12	22	39
190	183	220	2.2	3.0	C402_0160 EZ702U	600	1070	15.75	63/4	3300	3300	5000	16	12	22	41
190	206	244	2.5	2.7	C402_0160 EZ505U	600	1070	15.75	63/4	3300	3300	5000	15	12	22	41
190	252	318	3.0	2.2	C402_0160 EZ703U	600	1070	15.75	63/4	3300	3300	5000	24	12	22	43
190	325	461	3.9	1.7	C402_0160 EZ705U	600	1100	15.75	63/4	3300	3300	5000	37	12	22	49
214	163	195	2.1	3.3	C402_0140 EZ702U	550	1020	13.99	2015/144	3300	3300	5000	17	12	22	41
214	183	217	2.4	2.9	C402_0140 EZ505U	550	1020	13.99	2015/144	3300	3300	5000	16	12	22	41
214	224	282	2.9	2.4	C402_0140 EZ703U	550	1020	13.99	2015/144	3300	3300	5000	25	12	22	43
214	289	410	3.8	1.8	C402_0140 EZ705U	550	1100	13.99	2015/144	3300	3300	5000	37	12	22	49
240	146	175	2.1	3.5	C402_0125 EZ702U	500	910	12.52	651/52	3300	3300	5000	17	12	22	41
240	164	194	2.3	3.1	C402_0125 EZ505U	600	910	12.52	651/52	3300	3300	5000	16	12	22	41
240	200	253	2.9	2.6	C402_0125 EZ703U	600	910	12.52	651/52	3300	3300	5000	25	12	22	43
240	259	367	3.7	2.0	C402_0125 EZ705U	600	1100	12.52	651/52	3300	3300	5000	37	12	22	49
240	271	451	3.9	1.9	C402_0125 EZ802U	600	1100	12.52	651/52	3300	3300	5000	61	12	22	57
258	135	163	2.1	3.7	C402_0115 EZ702U	460	850	11.64	1885/162	2900	2900	4500	18	12	22	41
258	152	181	2.3	3.3	C402_0115 EZ505U	550	850	11.64	1885/162	2900	2900	4500	16	12	22	41
258	186	235	2.8	2.7	C402_0115 EZ703U	550	850	11.64	1885/162	2900	2900	4500	26	12	22	43
258	240	341	3.7	2.1	C402_0115 EZ705U	550	1100	11.64	1885/162	2900	2900	4500	38	12	22	49
258	252	419	3.8	2.0	C402_0115 EZ802U	550	1100	11.64	1885/162	2900	2900	4500	62	12	22	57
288	121	145	2.0	4.0	C402_0105 EZ702U	410	760	10.41	406/39	2900	2900	4500	18	12	22	41
288	136	162	2.3	3.5	C402_0105 EZ505U	600	760	10.41	406/39	2900	2900	4500	17	12	22	41
288	167	210	2.8	2.9	C402_0105 EZ703U	600	760	10.41	406/39	2900	2900	4500	26	12	22	43
288	215	305	3.6	2.2	C402_0105 EZ705U	600	1100	10.41	406/39	2900	2900	4500	38	12	22	49
288	225	375	3.8	2.1	C402_0105 EZ802U	600	1100	10.41	406/39	2900	2900	4500	62	12	22	57
324	191	271	3.5	2.4	C402_0093 EZ705U	550	1100	9.261	3445/372	2900	2900	4500	40	12	22	49
324	200	333	3.7	2.3	C402_0093 EZ802U	550	1100	9.261	3445/372	2900	2900	4500	64	12	22	57
362	171	243	3.5	2.6	C402_0083 EZ705U	600	1100	8.285	3339/403	2900	2900	4500	40	12	22	49
362	179	298	3.6	2.5	C402_0083 EZ802U	600	1100	8.285	3339/403	2900	2900	4500	64	12	22	57
362	214	387	4.3	2.1	C402_0083 EZ803U	600	1100	8.285	3339/403	2900	2900	4500	89	12	22	63
384	91	109	2.7	3.5	C402_0078 EZ702U	310	450	7.816	2001/256	3500	3500	5500	16	15	17	41
384	102	121	3.0	3.1	C402_0078 EZ505U	360	450	7.816	2001/256	3500	3500	5500	14	15	17	41
384	125	158	3.7	2.5	C402_0078 EZ703U	360	450	7.816	2001/256	3500	3500	5500	24	15	17	43
384	161	229	4.8	2.0	C402_0078 EZ705U	550	850	7.816	2001/256	3500	3500	5500	36	15	17	49
384	169	281	5.0	1.9	C402_0078 EZ802U	550	850	7.816	2001/256	3500	3500	5500	60	15	17	57
384	202	365	6.0	1.6	C402_0078 EZ803U	550	850	7.816	2001/256	3500	3500	5500	86	15	17	63
509	69	82	2.6	4.2	C402_0059 EZ702U	230	400	5.891	377/64	3300	3300	5000	17	15	17	41

n_{2N} [rpm]	M_{2N} [Nm]	$M_{2,0}$ [Nm]	a_{th}	S	Type	M_{2acc} [Nm]	M_{2NOT} [Nm]	i	i_{exakt}	n_{1maxDB} EL1,2,3,4 [rpm]	n_{1maxDB} EL5,6 [rpm]	n_{1maxZB} [rpm]	J_1 [kgcm²]	$\Delta\varphi_2$ [arcmin]	C_2 [Nm/arcmin]	m [kg]
C4 (n_{1N} = 3000 rpm, $M_{2acc,max}$ = 600 Nm)																
509	77	91	2.9	3.7	C402_0059 EZ505U	320	400	5.891	377/64	3300	3300	5000	15	15	17	41
509	94	119	3.5	3.0	C402_0059 EZ703U	320	400	5.891	377/64	3300	3300	5000	25	15	17	43
509	122	173	4.5	2.4	C402_0059 EZ705U	540	850	5.891	377/64	3300	3300	5000	37	15	17	49
509	127	212	4.8	2.3	C402_0059 EZ802U	540	850	5.891	377/64	3300	3300	5000	61	15	17	57
509	152	275	5.7	1.9	C402_0059 EZ803U	540	850	5.891	377/64	3300	3300	5000	87	15	17	63
641	54	65	2.5	4.9	C402_0047 EZ702U	190	340	4.682	899/192	3300	3300	5000	18	15	17	41
641	61	73	2.8	4.3	C402_0047 EZ505U	270	340	4.682	899/192	3300	3300	5000	17	15	17	41
641	75	94	3.4	3.5	C402_0047 EZ703U	270	340	4.682	899/192	3300	3300	5000	26	15	17	43
641	97	137	4.4	2.7	C402_0047 EZ705U	470	800	4.682	899/192	3300	3300	5000	39	15	17	49
641	101	168	4.6	2.6	C402_0047 EZ802U	450	800	4.682	899/192	3300	3300	5000	63	15	17	57
641	121	219	5.5	2.2	C402_0047 EZ803U	500	800	4.682	899/192	3300	3300	5000	88	15	17	63
770	51	60	3.0	4.4	C402_0039 EZ505U	230	280	3.894	841/216	2900	2900	4500	18	15	17	41
770	62	79	3.6	3.6	C402_0039 EZ703U	230	280	3.894	841/216	2900	2900	4500	28	15	17	43
770	80	114	4.2	3.1	C402_0039 EZ705U	390	710	3.894	841/216	2900	2900	4500	40	15	17	49
770	84	140	4.4	3.0	C402_0039 EZ802U	380	710	3.894	841/216	2900	2900	4500	64	15	17	57
770	100	182	5.3	2.5	C402_0039 EZ803U	470	710	3.894	841/216	2900	2900	4500	89	15	17	63
968	64	91	4.1	3.6	C402_0031 EZ705U	310	600	3.099	1537/496	2900	2900	4500	42	15	17	49
968	67	112	4.3	3.5	C402_0031 EZ802U	300	600	3.099	1537/496	2900	2900	4500	66	15	17	57
968	80	145	5.1	2.9	C402_0031 EZ803U	440	600	3.099	1537/496	2900	2900	4500	92	15	17	63
1221	51	72	3.9	4.2	C402_0025 EZ705U	250	480	2.456	609/248	2500	2500	3500	46	15	17	49
1221	53	88	4.1	4.0	C402_0025 EZ802U	240	480	2.456	609/248	2500	2500	3500	70	15	17	57
1221	63	115	4.9	3.4	C402_0025 EZ803U	350	480	2.456	609/248	2500	2500	3500	96	15	17	63
1524	41	58	3.8	4.9	C402_0020 EZ705U	200	380	1.968	551/280	2500	2500	3500	51	15	17	49
1524	43	71	4.0	4.7	C402_0020 EZ802U	190	380	1.968	551/280	2500	2500	3500	75	15	17	57
1524	51	92	4.7	3.9	C402_0020 EZ803U	280	380	1.968	551/280	2500	2500	3500	101	15	17	63
C4 (n_{1N} = 4500 rpm, $M_{2acc,max}$ = 600 Nm)																
144	287	462	2.4	1.9	C402_0310 EZ505U	600	1100	31.15	405/13	3500	3500	5500	13	12	22	41
162	257	413	2.3	2.1	C402_0280 EZ505U	550	1100	27.86	195/7	3500	3500	5500	13	12	22	41
181	230	370	2.2	2.4	C402_0250 EZ505U	600	1100	24.92	324/13	3500	3500	5500	13	12	22	41
193	215	347	2.1	2.6	C402_0230 EZ505U	550	1100	23.36	1495/64	3500	3500	5500	14	12	22	41
215	193	310	2.1	2.8	C402_0210 EZ505U	600	1100	20.90	4347/208	3500	3500	5500	14	12	22	41
215	245	405	2.6	2.2	C402_0210 EZ703U	600	1100	20.90	4347/208	3500	3500	5500	23	12	22	43
256	162	261	2.0	3.1	C402_0175 EZ505U	550	1100	17.60	845/48	3300	3300	5000	15	12	22	41
256	207	342	2.5	2.4	C402_0175 EZ703U	550	1100	17.60	845/48	3300	3300	5000	24	12	22	43
286	145	234	2.0	3.3	C402_0160 EZ505U	600	1070	15.75	63/4	3300	3300	5000	15	12	22	41
286	185	306	2.5	2.6	C402_0160 EZ703U	600	1070	15.75	63/4	3300	3300	5000	24	12	22	43
286	251	458	3.4	1.9	C402_0160 EZ705U	600	1100	15.75	63/4	3300	3300	5000	37	12	22	49
322	129	208	1.9	3.6	C402_0140 EZ505U	550	1020	13.99	2015/144	3300	3300	5000	16	12	22	41
322	164	271	2.5	2.8	C402_0140 EZ703U	550	1020	13.99	2015/144	3300	3300	5000	25	12	22	43
322	223	407	3.3	2.1	C402_0140 EZ705U	550	1100	13.99	2015/144	3300	3300	5000	37	12	22	49
359	115	186	1.9	3.9	C402_0125 EZ505U	600	910	12.52	651/52	3300	3300	5000	16	12	22	41
359	128	419	2.1	3.5	C402_0125 EZ802U	600	1100	12.52	651/52	3300	3300	5000	61	12	22	57
359	147	243	2.4	3.1	C402_0125 EZ703U	600	910	12.52	651/52	3300	3300	5000	25	12	22	43
359	199	364	3.3	2.3	C402_0125 EZ705U	600	1100	12.52	651/52	3300	3300	5000	37	12	22	49
387	107	173	1.9	4.1	C402_0115 EZ505U	550	850	11.64	1885/162	2900	2900	4500	16	12	22	41
387	119	389	2.1	3.7	C402_0115 EZ802U	550	1100	11.64	1885/162	2900	2900	4500	62	12	22	57
387	137	226	2.4	3.2	C402_0115 EZ703U	550	850	11.64	1885/162	2900	2900	4500	26	12	22	43
387	185	339	3.2	2.4	C402_0115 EZ705U	550	1100	11.64	1885/162	2900	2900	4500	38	12	22	49
432	96	154	1.8	4.4	C402_0105 EZ505U	600	760	10.41	406/39	2900	2900	4500	17	12	22	41
432	106	348	2.0	4.0	C402_0105 EZ802U	600	1100	10.41	406/39	2900	2900	4500	62	12	22	57
432	122	202	2.3	3.5	C402_0105 EZ703U	600	760	10.41	406/39	2900	2900	4500	26	12	22	43
432	166	303	3.2	2.5	C402_0105 EZ705U	600	1100	10.41	406/39	2900	2900	4500	38	12	22	49
486	94	310	2.0	4.3	C402_0093 EZ802U	550	1100	9.261	3445/372	2900	2900	4500	64	12	22	57
486	147	269	3.1	2.8	C402_0093 EZ705U	550	1100	9.261	3445/372	2900	2900	4500	40	12	22	49
543	84	277	2.0	4.6	C402_0083 EZ802U	600	1100	8.285	3339/403	2900	2900	4500	64	12	22	57
543	132	241	3.0	3.0	C402_0083 EZ705U	600	1100	8.285	3339/403	2900	2900	4500	40	12	22	49
576	72	116	2.4	3.8	C402_0078 EZ505U	360	450	7.816	2001/256	3500	3500	5500	14	15	17	41
576	80	262	2.7	3.5	C402_0078 EZ802U	550	850	7.816	2001/256	3500	3500	5500	60	15	17	57
576	92	152	3.1	3.0	C402_0078 EZ703U	360	450	7.816	2001/256	3500	3500	5500	24	15	17	43
576	124	227	4.2	2.2	C402_0078 EZ705U	550	850	7.816	2001/256	3500	3500	5500	36	15	17	49
764	54	87	2.3	4.6	C402_0059 EZ505U	320	400	5.891	377/64	3300	3300	5000	15	15	17	41
764	60	197	2.6	4.2	C402_0059 EZ802U	540	850	5.891	377/64	3300	3300	5000	61	15	17	57
764	69	114	3.0	3.6	C402_0059 EZ703U	320	400	5.891	377/64	3300	3300	5000	25	15	17	43
764	94	171	4.0	2.7	C402_0059 EZ705U	540	850	5.891	377/64	3300	3300	5000	37	15	17	49

n_{2N} [rpm]	M_{2N} [Nm]	$M_{2,0}$ [Nm]	a_{th}	S	Type	M_{2acc} [Nm]	M_{2NOT} [Nm]	i	i_{exakt}	n_{1maxDB} EL1,2,3,4 [rpm]	n_{1maxDB} EL5,6 [rpm]	n_{1maxZB} [rpm]	J_1 [kgcm²]	$\Delta\varphi_2$ [arcmin]	C_2 [Nm/arcmin]	m [kg]
C4 (n_{1N} = 4500 rpm, $M_{2acc,max}$ = 600 Nm)																
961	48	157	2.5	4.9	C402_0047 EZ802U	450	800	4.682	899/192	3300	3300	5000	63	15	17	57
961	55	91	2.8	4.2	C402_0047 EZ703U	270	340	4.682	899/192	3300	3300	5000	26	15	17	43
961	74	136	3.9	3.1	C402_0047 EZ705U	470	800	4.682	899/192	3300	3300	5000	39	15	17	49
1156	46	76	2.8	4.8	C402_0039 EZ703U	230	280	3.894	841/216	2900	2900	4500	28	15	17	43
1156	62	113	3.7	3.5	C402_0039 EZ705U	390	710	3.894	841/216	2900	2900	4500	40	15	17	49
1452	49	90	3.6	4.1	C402_0031 EZ705U	310	600	3.099	1537/496	2900	2900	4500	42	15	17	49
C5 (n_{1N} = 2000 rpm, $M_{2acc,max}$ = 920 Nm)																
193	440	666	4.8	1.8	C502_0105 EZ805U	920	1600	10.38	841/81	2800	2800	4000	141	12	23	88
216	393	594	4.5	2.0	C502_0093 EZ805U	850	1600	9.261	3445/372	2800	2800	4000	143	12	23	88
242	350	530	4.4	2.2	C502_0083 EZ805U	920	1600	8.263	1537/186	2800	2800	4000	144	12	23	88
258	329	498	5.9	1.7	C502_0078 EZ805U	800	1110	7.763	621/80	3400	3400	5000	136	14	21	88
342	248	375	5.7	2.0	C502_0059 EZ805U	770	970	5.850	117/20	3100	3100	4500	139	14	21	88
432	196	297	5.4	2.4	C502_0046 EZ805U	700	880	4.629	162/35	3100	3100	4500	141	14	21	88
517	164	248	5.3	2.7	C502_0039 EZ805U	600	750	3.867	58/15	2800	2800	4000	144	14	21	88
650	130	197	5.1	3.1	C502_0031 EZ805U	480	600	3.077	477/155	2800	2800	4000	148	14	21	88
1012	84	127	4.7	4.2	C502_0020 EZ805U	390	720	1.976	81/41	2400	2400	3200	163	14	21	88
C5 (n_{1N} = 3000 rpm, $M_{2acc,max}$ = 920 Nm)																
22	556	608	1.7	1.4	C503_1350 EZ501U	850	1600	135.3	406/3	3400	3400	5000	3.2	12	23	51
28	447	488	1.5	1.8	C503_1090 EZ501U	850	1600	108.6	31291/288	3400	3400	5000	3.2	12	23	51
33	371	406	1.4	2.2	C503_0900 EZ501U	850	1490	90.32	8671/96	3400	3400	5000	3.3	12	23	51
37	331	362	1.3	2.4	C503_0810 EZ501U	920	1330	80.60	19343/240	3400	3400	5000	3.3	12	23	51
37	570	616	2.2	1.4	C503_0810 EZ502U	920	1330	80.60	19343/240	3400	3400	5000	5.6	12	23	52
43	292	319	1.2	2.7	C502_0700 EZ501U	850	1210	69.97	10075/144	3400	3400	5000	3.4	12	23	47
43	502	543	2.1	1.6	C502_0700 EZ502U	850	1210	69.97	10075/144	3400	3400	5000	5.7	12	23	48
43	502	563	2.1	1.6	C502_0700 EZ701U	850	1210	69.97	10075/144	3400	3400	5000	9.0	12	23	50
48	260	285	1.3	2.7	C502_0620 EZ501U	860	1080	62.43	4495/72	3400	3400	5000	3.4	12	23	47
48	448	484	2.2	1.6	C502_0620 EZ502U	860	1080	62.43	4495/72	3400	3400	5000	5.7	12	23	48
48	448	503	2.2	1.6	C502_0620 EZ701U	860	1080	62.43	4495/72	3400	3400	5000	9.0	12	23	50
54	233	255	1.1	3.4	C502_0560 EZ501U	850	1120	55.83	335/6	3400	3400	5000	3.6	12	23	47
54	401	433	1.9	2.0	C502_0560 EZ502U	850	1120	55.83	335/6	3400	3400	5000	5.9	12	23	48
54	401	450	1.9	2.0	C502_0560 EZ701U	850	1600	55.83	335/6	3400	3400	5000	9.2	12	23	50
54	525	601	2.5	1.5	C502_0560 EZ503U	850	1120	55.83	335/6	3400	3400	5000	8.3	12	23	50
60	208	227	1.0	3.8	C502_0500 EZ501U	770	1000	49.82	1943/39	3400	3400	5000	3.6	12	23	47
60	358	387	1.8	2.2	C502_0500 EZ502U	800	1000	49.82	1943/39	3400	3400	5000	5.9	12	23	48
60	358	401	1.8	2.2	C502_0500 EZ701U	920	1600	49.82	1943/39	3400	3400	5000	9.2	12	23	50
60	469	536	2.3	1.7	C502_0500 EZ503U	800	1000	49.82	1943/39	3400	3400	5000	8.3	12	23	50
60	580	696	2.9	1.4	C502_0500 EZ702U	920	1600	49.82	1943/39	3400	3400	5000	14	12	23	53
64	335	376	1.7	2.4	C502_0470 EZ701U	850	1600	46.72	1495/32	3400	3400	5000	9.5	12	23	50
64	544	653	2.8	1.5	C502_0470 EZ702U	850	1600	46.72	1495/32	3400	3400	5000	15	12	23	53
72	299	336	1.6	2.7	C502_0420 EZ701U	810	1600	41.69	667/16	3400	3400	5000	9.5	12	23	50
72	485	582	2.6	1.6	C502_0420 EZ702U	920	1600	41.69	667/16	3400	3400	5000	15	12	23	53
72	546	647	3.0	1.5	C502_0420 EZ505U	920	1600	41.69	667/16	3400	3400	5000	13	12	23	53
86	251	282	1.5	3.2	C502_0350 EZ701U	680	1600	35.00	35/1	3400	3400	5000	10	12	23	50
86	407	489	2.4	2.0	C502_0350 EZ702U	850	1600	35.00	35/1	3400	3400	5000	15	12	23	53
86	458	543	2.7	1.7	C502_0350 EZ505U	850	1600	35.00	35/1	3400	3400	5000	14	12	23	53
96	224	251	1.4	3.6	C502_0310 EZ701U	610	1520	31.23	406/13	3400	3400	5000	10	12	23	50
96	364	436	2.3	2.2	C502_0310 EZ702U	920	1520	31.23	406/13	3400	3400	5000	15	12	23	53
96	409	485	2.6	2.0	C502_0310 EZ505U	920	1520	31.23	406/13	3400	3400	5000	14	12	23	53
96	500	630	3.1	1.6	C502_0310 EZ703U	920	1520	31.23	406/13	3400	3400	5000	23	12	23	55
107	202	226	1.3	4.0	C502_0280 EZ701U	550	1600	28.10	5395/192	3400	3400	5000	11	12	23	50
107	327	392	2.2	2.4	C502_0280 EZ702U	850	1600	28.10	5395/192	3400	3400	5000	16	12	23	53
107	368	436	2.4	2.2	C502_0280 EZ505U	850	1600	28.10	5395/192	3400	3400	5000	14	12	23	53
107	450	567	3.0	1.8	C502_0280 EZ703U	850	1600	28.10	5395/192	3400	3400	5000	24	12	23	55
120	180	202	1.3	4.4	C502_0250 EZ701U	490	1440	25.07	2407/96	3400	3400	5000	11	12	23	50
120	292	350	2.0	2.7	C502_0250 EZ702U	920	1440	25.07	2407/96	3400	3400	5000	16	12	23	53
120	328	389	2.3	2.4	C502_0250 EZ505U	920	1440	25.07	2407/96	3400	3400	5000	14	12	23	53
120	401	506	2.8	2.0	C502_0250 EZ703U	920	1440	25.07	2407/96	3400	3400	5000	24	12	23	55
128	168	188	1.2	4.8	C502_0230 EZ701U	450	1490	23.36	1495/64	3400	3400	5000	12	12	23	50
128	272	326	2.0	2.9	C502_0230 EZ702U	850	1490	23.36	1495/64	3400	3400	5000	17	12	23	53
128	306	363	2.2	2.6	C502_0230 EZ505U	850	1490	23.36	1495/64	3400	3400	5000	15	12	23	53
128	374	471	2.7	2.1	C502_0230 EZ703U	850	1490	23.36	1495/64	3400	3400	5000	25	12	23	55
144	243	291	1.9	3.3	C502_0210 EZ702U	830	1330	20.84	667/32	3400	3400	5000	17	12	23	53
144	273	323	2.1	2.9	C502_0210 EZ505U	920	1330	20.84	667/32	3400	3400	5000	15	12	23	53
144	334	421	2.6	2.4	C502_0210 EZ703U	920	1330	20.84	667/32	3400	3400	5000	25	12	23	55

n_{2N} [rpm]	M_{2N} [Nm]	$M_{2,0}$ [Nm]	a_{th}	S	Type	M_{2acc} [Nm]	M_{2NOT} [Nm]	i	i_{exakt}	n_{1maxDB} EL1,2,3,4 [rpm]	n_{1maxDB} EL5,6 [rpm]	n_{1maxZB} [rpm]	J_1 [kgcm²]	$\Delta\varphi_2$ [arcmin]	C_2 [Nm/arcmin]	m [kg]
C5 (n_{1N} = 3000 rpm, $M_{2acc,max}$ = 920 Nm)																
144	431	611	3.3	1.9	C502_0210 EZ705U	920	1600	20.84	667/32	3400	3400	5000	37	12	23	60
170	364	516	3.0	2.2	C502_0175 EZ705U	850	1600	17.60	845/48	3100	3100	4500	39	12	23	60
170	381	634	3.2	2.1	C502_0175 EZ802U	850	1600	17.60	845/48	3100	3100	4500	63	12	23	68
191	325	460	2.9	2.5	C502_0155 EZ705U	920	1600	15.71	377/24	3100	3100	4500	39	12	23	60
191	340	565	3.0	2.4	C502_0155 EZ802U	920	1600	15.71	377/24	3100	3100	4500	63	12	23	68
215	162	195	1.5	4.9	C502_0140 EZ702U	550	1010	13.93	195/14	3100	3100	4500	20	12	23	53
215	182	216	1.7	4.4	C502_0140 EZ505U	810	1010	13.93	195/14	3100	3100	4500	18	12	23	53
215	223	281	2.1	3.6	C502_0140 EZ703U	810	1010	13.93	195/14	3100	3100	4500	28	12	23	55
215	288	408	2.7	2.8	C502_0140 EZ705U	850	1600	13.93	195/14	3100	3100	4500	40	12	23	60
215	301	501	2.8	2.6	C502_0140 EZ802U	850	1600	13.93	195/14	3100	3100	4500	64	12	23	68
215	359	651	3.4	2.2	C502_0140 EZ803U	850	1600	13.93	195/14	3100	3100	4500	90	12	23	75
241	145	174	1.6	5.0	C502_0125 EZ702U	490	900	12.43	87/7	3100	3100	4500	20	12	23	53
241	163	193	1.8	4.4	C502_0125 EZ505U	720	900	12.43	87/7	3100	3100	4500	18	12	23	53
241	199	251	2.2	3.6	C502_0125 EZ703U	720	900	12.43	87/7	3100	3100	4500	28	12	23	55
241	257	364	2.7	3.0	C502_0125 EZ705U	920	1600	12.43	87/7	3100	3100	4500	40	12	23	60
241	269	447	2.8	2.9	C502_0125 EZ802U	920	1600	12.43	87/7	3100	3100	4500	64	12	23	68
241	321	581	3.3	2.4	C502_0125 EZ803U	920	1600	12.43	87/7	3100	3100	4500	90	12	23	75
258	240	341	2.6	3.1	C502_0115 EZ705U	850	1600	11.64	1885/162	2800	2800	4000	42	12	23	60
258	252	419	2.8	3.0	C502_0115 EZ802U	850	1600	11.64	1885/162	2800	2800	4000	66	12	23	68
258	300	544	3.3	2.5	C502_0115 EZ803U	850	1600	11.64	1885/162	2800	2800	4000	91	12	23	75
289	215	304	2.6	3.4	C502_0105 EZ705U	920	1600	10.38	841/81	2800	2800	4000	42	12	23	60
289	225	374	2.7	3.2	C502_0105 EZ802U	920	1600	10.38	841/81	2800	2800	4000	66	12	23	68
289	268	485	3.2	2.7	C502_0105 EZ803U	920	1600	10.38	841/81	2800	2800	4000	92	12	23	75
324	191	271	2.5	3.6	C502_0093 EZ705U	850	1600	9.261	3445/372	2800	2800	4000	45	12	23	60
324	200	333	2.6	3.5	C502_0093 EZ802U	850	1600	9.261	3445/372	2800	2800	4000	69	12	23	68
324	239	433	3.2	2.9	C502_0093 EZ803U	850	1600	9.261	3445/372	2800	2800	4000	94	12	23	75
363	171	242	2.5	3.9	C502_0083 EZ705U	830	1600	8.263	1537/186	2800	2800	4000	45	12	23	60
363	179	297	2.6	3.8	C502_0083 EZ802U	800	1600	8.263	1537/186	2800	2800	4000	69	12	23	68
363	213	386	3.1	3.1	C502_0083 EZ803U	920	1600	8.263	1537/186	2800	2800	4000	94	12	23	75
386	90	108	2.3	4.4	C502_0078 EZ702U	310	500	7.763	621/80	3400	3400	5000	18	14	21	53
386	102	120	2.6	3.9	C502_0078 EZ505U	400	500	7.763	621/80	3400	3400	5000	16	14	21	53
386	124	157	3.1	3.2	C502_0078 EZ703U	400	500	7.763	621/80	3400	3400	5000	25	14	21	55
386	160	227	3.3	3.0	C502_0078 EZ705U	780	1110	7.763	621/80	3400	3400	5000	38	14	21	60
386	168	279	3.5	2.9	C502_0078 EZ802U	750	1110	7.763	621/80	3400	3400	5000	62	14	21	68
386	200	363	4.1	2.4	C502_0078 EZ803U	800	1110	7.763	621/80	3400	3400	5000	87	14	21	75
513	121	171	3.2	3.7	C502_0059 EZ705U	590	970	5.850	117/20	3100	3100	4500	40	14	21	60
513	127	211	3.3	3.5	C502_0059 EZ802U	570	970	5.850	117/20	3100	3100	4500	64	14	21	68
513	151	274	3.9	2.9	C502_0059 EZ803U	770	970	5.850	117/20	3100	3100	4500	89	14	21	75
648	54	65	2.6	5.0	C502_0046 EZ702U	180	340	4.629	162/35	3100	3100	4500	22	14	21	53
648	61	72	2.9	4.4	C502_0046 EZ505U	270	340	4.629	162/35	3100	3100	4500	20	14	21	53
648	74	93	3.6	3.6	C502_0046 EZ703U	270	340	4.629	162/35	3100	3100	4500	30	14	21	55
648	96	136	3.0	4.3	C502_0046 EZ705U	470	880	4.629	162/35	3100	3100	4500	42	14	21	60
648	100	167	3.2	4.1	C502_0046 EZ802U	450	880	4.629	162/35	3100	3100	4500	66	14	21	68
648	119	216	3.8	3.4	C502_0046 EZ803U	650	880	4.629	162/35	3100	3100	4500	92	14	21	75
776	80	113	2.9	4.8	C502_0039 EZ705U	390	750	3.867	58/15	2800	2800	4000	45	14	21	60
776	84	139	3.1	4.6	C502_0039 EZ802U	380	750	3.867	58/15	2800	2800	4000	69	14	21	68
776	100	181	3.7	3.9	C502_0039 EZ803U	540	750	3.867	58/15	2800	2800	4000	94	14	21	75
975	79	144	3.5	4.5	C502_0031 EZ803U	430	600	3.077	477/155	2800	2800	4000	99	14	21	75
C5 (n_{1N} = 4500 rpm, $M_{2acc,max}$ = 920 Nm)																
108	384	619	2.1	2.1	C502_0420 EZ505U	920	1600	41.69	667/16	3400	3400	5000	13	12	23	53
129	323	519	1.9	2.5	C502_0350 EZ505U	850	1600	35.00	35/1	3400	3400	5000	14	12	23	53
144	288	463	1.8	2.8	C502_0310 EZ505U	920	1520	31.23	406/13	3400	3400	5000	14	12	23	53
144	367	606	2.3	2.2	C502_0310 EZ703U	920	1520	31.23	406/13	3400	3400	5000	23	12	23	55
160	259	417	1.7	3.1	C502_0280 EZ505U	850	1600	28.10	5395/192	3400	3400	5000	14	12	23	53
160	330	545	2.2	2.4	C502_0280 EZ703U	850	1600	28.10	5395/192	3400	3400	5000	24	12	23	55
179	231	372	1.6	3.5	C502_0250 EZ505U	920	1440	25.07	2407/96	3400	3400	5000	14	12	23	53
179	294	486	2.1	2.7	C502_0250 EZ703U	920	1440	25.07	2407/96	3400	3400	5000	24	12	23	55
193	215	347	1.6	3.7	C502_0230 EZ505U	850	1490	23.36	1495/64	3400	3400	5000	15	12	23	53
193	274	453	2.0	2.9	C502_0230 EZ703U	850	1490	23.36	1495/64	3400	3400	5000	25	12	23	55
216	192	309	1.5	4.2	C502_0210 EZ505U	920	1330	20.84	667/32	3400	3400	5000	15	12	23	53
216	212	698	1.6	3.8	C502_0210 EZ802U	920	1600	20.84	667/32	3400	3400	5000	61	12	23	68
216	245	404	1.9	3.3	C502_0210 EZ703U	920	1330	20.84	667/32	3400	3400	5000	25	12	23	55
216	332	607	2.6	2.4	C502_0210 EZ705U	920	1600	20.84	667/32	3400	3400	5000	37	12	23	60
256	179	589	1.6	4.2	C502_0175 EZ802U	850	1600	17.60	845/48	3100	3100	4500	63	12	23	68

n_{2N} [rpm]	M_{2N} [Nm]	$M_{2,0}$ [Nm]	a_{th}	S	Type	M_{2acc} [Nm]	M_{2NOT} [Nm]	i	i_{exakt}	n_{1maxDB} EL1,2,3,4 [rpm]	n_{1maxDB} EL5,6 [rpm]	n_{1maxZB} [rpm]	J_1 [kgcm²]	$\Delta\varphi_2$ [arcmin]	C_2 [Nm/arcmin]	m [kg]
C5 (n_{1N} = 4500 rpm, $M_{2acc,max}$ = 920 Nm)																
256	280	512	2.5	2.7	C502_0175 EZ705U	850	1600	17.60	845/48	3100	3100	4500	39	12	23	60
286	160	526	1.6	4.5	C502_0155 EZ802U	920	1600	15.71	377/24	3100	3100	4500	63	12	23	68
286	250	457	2.4	2.9	C502_0155 EZ705U	920	1600	15.71	377/24	3100	3100	4500	39	12	23	60
323	142	466	1.5	4.9	C502_0140 EZ802U	850	1600	13.93	195/14	3100	3100	4500	64	12	23	68
323	163	270	1.8	4.3	C502_0140 EZ703U	810	1010	13.93	195/14	3100	3100	4500	28	12	23	55
323	222	405	2.4	3.1	C502_0140 EZ705U	850	1600	13.93	195/14	3100	3100	4500	40	12	23	60
362	146	241	1.7	4.6	C502_0125 EZ703U	720	900	12.43	87/7	3100	3100	4500	28	12	23	55
362	198	362	2.3	3.4	C502_0125 EZ705U	920	1600	12.43	87/7	3100	3100	4500	40	12	23	60
580	91	151	2.3	4.4	C502_0078 EZ703U	400	500	7.763	621/80	3400	3400	5000	25	14	21	55
580	123	226	2.9	3.4	C502_0078 EZ705U	780	1110	7.763	621/80	3400	3400	5000	38	14	21	60
769	93	170	2.8	4.2	C502_0059 EZ705U	590	970	5.850	117/20	3100	3100	4500	40	14	21	60
972	54	90	2.6	5.0	C502_0046 EZ703U	270	340	4.629	162/35	3100	3100	4500	30	14	21	55
972	74	135	2.7	4.9	C502_0046 EZ705U	470	880	4.629	162/35	3100	3100	4500	42	14	21	60
C6 (n_{1N} = 2000 rpm, $M_{2acc,max}$ = 1650 Nm)																
102	831	1257	4.0	1.7	C612_0195 EZ805U	1650	2560	19.61	549/28	3200	3200	4500	138	10	74	103
123	687	1039	3.9	1.9	C612_0160 EZ805U	1650	2900	16.20	1037/64	3200	3200	4500	140	10	74	103
141	600	907	3.8	2.1	C612_0140 EZ805U	1380	2600	14.15	976/69	3000	3000	4000	146	10	74	103
159	533	807	3.7	2.3	C612_0125 EZ805U	1650	2900	12.58	2013/160	3000	3000	4000	143	10	74	103
175	486	735	3.7	2.4	C612_0115 EZ805U	1380	2600	11.46	928/81	2700	2700	3800	150	10	74	103
198	429	648	3.6	2.6	C612_0100 EZ805U	1650	2900	10.11	3721/368	3000	3000	4000	147	10	74	103
219	387	585	3.5	2.8	C612_0091 EZ805U	1380	2600	9.118	848/93	2700	2700	3800	156	10	74	103
244	347	525	3.5	3.0	C612_0082 EZ805U	1630	2900	8.190	1769/216	2700	2700	3800	152	10	74	103
281	301	456	3.4	3.3	C612_0071 EZ805U	1380	2590	7.111	64/9	2300	2300	3000	165	10	74	103
307	276	418	3.3	3.5	C612_0065 EZ805U	1300	2370	6.518	3233/496	2700	2700	3800	158	10	74	103
342	248	375	3.3	3.8	C612_0059 EZ805U	1160	2130	5.854	240/41	2300	2300	3000	174	10	74	103
393	215	326	3.2	4.2	C612_0051 EZ805U	1010	1850	5.083	61/12	2300	2300	3000	169	10	74	103
478	177	268	3.1	4.8	C612_0042 EZ805U	830	1520	4.184	2745/656	2300	2300	3000	180	10	74	103
C6 (n_{1N} = 3000 rpm, $M_{2acc,max}$ = 1650 Nm)																
14	876	957	1.4	1.5	C613_2130 EZ501U	1380	2240	213.1	28768/135	3200	3200	4500	3.2	10	74	71
17	721	788	1.3	1.8	C613_1750 EZ501U	1380	2010	175.3	7888/45	3200	3200	4500	3.2	10	74	71
22	554	606	1.1	2.3	C613_1350 EZ501U	1380	1720	134.8	15776/117	3200	3200	4500	3.3	10	74	71
22	954	1031	1.9	1.4	C613_1350 EZ502U	1380	1720	134.8	15776/117	3200	3200	4500	5.6	10	74	72
24	898	1007	1.6	1.6	C613_1270 EZ701U	1650	2900	126.9	48739/384	3200	3200	4500	9.1	10	74	74
28	760	852	1.7	1.7	C613_1070 EZ701U	1380	2600	107.4	752/7	3200	3200	4500	9.3	10	74	74
28	436	477	1.0	2.9	C613_1060 EZ501U	1280	1600	106.1	3712/35	3200	3200	4500	3.4	10	74	71
28	750	811	1.7	1.7	C613_1060 EZ502U	1280	1600	106.1	3712/35	3200	3200	4500	5.7	10	74	72
31	691	775	1.4	2.1	C613_0980 EZ701U	1650	2900	97.63	243695/2496	3200	3200	4500	9.2	10	74	74
34	628	704	1.5	2.1	C613_0890 EZ701U	1380	2600	88.78	799/9	3200	3200	4500	9.4	10	74	74
39	543	609	1.3	2.7	C613_0770 EZ701U	1470	2560	76.80	8601/112	3200	3200	4500	9.3	10	74	74
39	881	1057	2.1	1.6	C613_0770 EZ702U	1650	2560	76.80	8601/112	3200	3200	4500	15	10	74	76
40	312	341	1.2	2.9	C613_0760 EZ501U	910	1140	75.81	5307/70	3200	3200	4500	3.4	10	74	71
40	536	580	2.1	1.7	C613_0760 EZ502U	910	1140	75.81	5307/70	3200	3200	4500	5.7	10	74	72
44	494	555	1.4	2.6	C612_0690 EZ701U	1340	2360	68.89	620/9	3200	3200	4500	9.6	10	74	65
44	802	962	2.2	1.6	C612_0690 EZ702U	1380	2360	68.89	620/9	3200	3200	4500	15	10	74	68
47	449	504	1.2	3.1	C613_0630 EZ701U	1210	2300	63.46	48739/768	3200	3200	4500	9.4	10	74	74
47	728	874	2.0	1.9	C613_0630 EZ702U	1650	2300	63.46	48739/768	3200	3200	4500	15	10	74	76
47	1001	1262	2.7	1.4	C613_0630 EZ703U	1650	2300	63.46	48739/768	3200	3200	4500	23	10	74	78
54	396	444	1.2	3.3	C612_0550 EZ701U	1070	2240	55.11	496/9	3200	3200	4500	10	10	74	65
54	641	770	2.0	2.0	C612_0550 EZ702U	1380	2240	55.11	496/9	3200	3200	4500	15	10	74	68
61	349	391	1.2	3.7	C613_0490 EZ701U	940	1940	49.28	31537/640	3200	3200	4500	9.7	10	74	74
61	565	678	1.9	2.3	C613_0490 EZ702U	1550	1940	49.28	31537/640	3200	3200	4500	15	10	74	76
61	777	980	2.6	1.6	C613_0490 EZ703U	1550	1940	49.28	31537/640	3200	3200	4500	23	10	74	78
66	325	365	1.1	4.0	C612_0450 EZ701U	880	2010	45.33	136/3	3200	3200	4500	11	10	74	65
66	528	633	1.8	2.5	C612_0450 EZ702U	1380	2010	45.33	136/3	3200	3200	4500	16	10	74	68
66	726	915	2.5	1.8	C612_0450 EZ703U	1380	2010	45.33	136/3	3200	3200	4500	24	10	74	70
76	283	317	1.1	4.3	C612_0390 EZ701U	760	1600	39.40	1891/48	3200	3200	4500	10	10	74	65
76	459	550	1.8	2.7	C612_0390 EZ702U	1280	1600	39.40	1891/48	3200	3200	4500	15	10	74	68
76	631	795	2.5	1.9	C612_0390 EZ703U	1280	1600	39.40	1891/48	3200	3200	4500	23	10	74	70
86	406	487	1.6	3.2	C612_0350 EZ702U	1380	1720	34.87	1360/39	3200	3200	4500	17	10	74	68
86	558	704	2.2	2.3	C612_0350 EZ703U	1380	1720	34.87	1360/39	3200	3200	4500	25	10	74	70
86	720	1022	2.8	1.8	C612_0350 EZ705U	1380	2600	34.87	1360/39	3200	3200	4500	38	10	74	75
93	233	261	1.1	4.9	C612_0320 EZ701U	630	1440	32.41	1037/32	3200	3200	4500	11	10	74	65
93	377	453	1.7	3.0	C612_0320 EZ702U	1150	1440	32.41	1037/32	3200	3200	4500	16	10	74	68
93	519	654	2.4	2.2	C612_0320 EZ703U	1150	1440	32.41	1037/32	3200	3200	4500	24	10	74	70

n_{2N} [rpm]	M_{2N} [Nm]	$M_{2,0}$ [Nm]	a_{th}	S	Type	M_{2acc} [Nm]	M_{2NOT} [Nm]	i	i_{exakt}	n_{1maxDB} EL1,2,3,4 [rpm]	n_{1maxDB} EL5,6 [rpm]	n_{1maxZB} [rpm]	J_1 [kgcm²]	$\Delta\varphi_2$ [arcmin]	C_2 [Nm/arcmin]	m [kg]
C6 (n_{1N} = 3000 rpm, $M_{2acc,max}$ = 1650 Nm)																
93	670	949	2.4	2.2	C612_0320 EZ705U	1650	2900	32.41	1037/32	3200	3200	4500	36	10	74	75
93	701	1166	2.5	2.1	C612_0320 EZ802U	1650	2900	32.41	1037/32	3200	3200	4500	60	10	74	84
109	319	383	1.4	4.0	C612_0270 EZ702U	1090	1600	27.43	192/7	3200	3200	4500	19	10	74	68
109	439	553	2.0	2.9	C612_0270 EZ703U	1280	1600	27.43	192/7	3200	3200	4500	27	10	74	70
109	567	804	2.5	2.3	C612_0270 EZ705U	1380	2600	27.43	192/7	3200	3200	4500	39	10	74	75
109	593	987	2.6	2.2	C612_0270 EZ802U	1380	2600	27.43	192/7	3200	3200	4500	63	10	74	84
120	290	348	1.8	3.4	C612_0250 EZ702U	980	1230	24.93	5185/208	3200	3200	4500	17	10	74	68
120	399	503	2.4	2.5	C612_0250 EZ703U	980	1230	24.93	5185/208	3200	3200	4500	25	10	74	70
120	515	730	2.3	2.6	C612_0250 EZ705U	1650	2900	24.93	5185/208	3200	3200	4500	38	10	74	75
120	539	897	2.4	2.5	C612_0250 EZ802U	1650	2900	24.93	5185/208	3200	3200	4500	62	10	74	84
120	643	1165	2.9	2.1	C612_0250 EZ803U	1650	2900	24.93	5185/208	3200	3200	4500	87	10	74	90
132	468	664	2.3	2.8	C612_0230 EZ705U	1380	2600	22.67	68/3	3200	3200	4500	41	10	74	75
132	490	816	2.4	2.6	C612_0230 EZ802U	1380	2600	22.67	68/3	3200	3200	4500	65	10	74	84
132	585	1060	2.9	2.2	C612_0230 EZ803U	1380	2600	22.67	68/3	3200	3200	4500	90	10	74	90
153	228	274	1.7	4.0	C612_0195 EZ702U	780	1140	19.61	549/28	3200	3200	4500	19	10	74	68
153	314	396	2.3	2.9	C612_0195 EZ703U	910	1140	19.61	549/28	3200	3200	4500	27	10	74	70
153	405	574	2.2	3.0	C612_0195 EZ705U	1650	2560	19.61	549/28	3200	3200	4500	39	10	74	75
153	424	706	2.3	2.9	C612_0195 EZ802U	1650	2560	19.61	549/28	3200	3200	4500	63	10	74	84
153	506	917	2.8	2.4	C612_0195 EZ803U	1650	2560	19.61	549/28	3200	3200	4500	89	10	74	90
170	364	516	2.2	3.3	C612_0175 EZ705U	1380	2600	17.60	88/5	3000	3000	4000	44	10	74	75
170	381	633	2.3	3.1	C612_0175 EZ802U	1380	2600	17.60	88/5	3000	3000	4000	68	10	74	84
170	454	823	2.7	2.6	C612_0175 EZ803U	1380	2600	17.60	88/5	3000	3000	4000	94	10	74	90
185	335	475	2.2	3.5	C612_0160 EZ705U	1630	2300	16.20	1037/64	3200	3200	4500	41	10	74	75
185	350	583	2.3	3.3	C612_0160 EZ802U	1570	2300	16.20	1037/64	3200	3200	4500	65	10	74	84
185	418	758	2.7	2.8	C612_0160 EZ803U	1650	2900	16.20	1037/64	3200	3200	4500	91	10	74	90
212	292	414	2.1	3.8	C612_0140 EZ705U	1380	2520	14.15	976/69	3000	3000	4000	48	10	74	75
212	306	509	2.2	3.6	C612_0140 EZ802U	1370	2520	14.15	976/69	3000	3000	4000	72	10	74	84
212	365	661	2.6	3.0	C612_0140 EZ803U	1380	2600	14.15	976/69	3000	3000	4000	97	10	74	90
238	260	369	2.1	4.1	C612_0125 EZ705U	1270	2120	12.58	2013/160	3000	3000	4000	45	10	74	75
238	272	453	2.2	3.9	C612_0125 EZ802U	1220	2120	12.58	2013/160	3000	3000	4000	69	10	74	84
238	325	588	2.6	3.3	C612_0125 EZ803U	1650	2900	12.58	2013/160	3000	3000	4000	94	10	74	90
262	237	336	2.0	4.4	C612_0115 EZ705U	1160	2220	11.46	928/81	2700	2700	3800	52	10	74	75
262	248	412	2.1	4.2	C612_0115 EZ802U	1110	2220	11.46	928/81	2700	2700	3800	76	10	74	84
262	296	536	2.5	3.5	C612_0115 EZ803U	1380	2600	11.46	928/81	2700	2700	3800	101	10	74	90
297	209	296	2.0	4.7	C612_0100 EZ705U	1020	1800	10.11	3721/368	3000	3000	4000	49	10	74	75
297	219	364	2.1	4.5	C612_0100 EZ802U	980	1800	10.11	3721/368	3000	3000	4000	73	10	74	84
297	261	473	2.5	3.8	C612_0100 EZ803U	1420	2900	10.11	3721/368	3000	3000	4000	98	10	74	90
329	197	328	2.1	4.8	C612_0091 EZ802U	880	1770	9.118	848/93	2700	2700	3800	81	10	74	84
329	235	426	2.4	4.1	C612_0091 EZ803U	1280	2600	9.118	848/93	2700	2700	3800	107	10	74	90
366	211	383	2.4	4.4	C612_0082 EZ803U	1150	2900	8.190	1769/216	2700	2700	3800	102	10	74	90
422	183	332	2.4	4.8	C612_0071 EZ803U	1000	2590	7.111	64/9	2300	2300	3000	116	10	74	90
C6 (n_{1N} = 4500 rpm, $M_{2acc,max}$ = 1650 Nm)																
71	734	1213	2.3	1.6	C613_0630 EZ703U	1650	2300	63.46	48739/768	3200	3200	4500	23	10	74	78
91	570	942	2.2	2.0	C613_0490 EZ703U	1550	1940	49.28	31537/640	3200	3200	4500	23	10	74	78
99	532	879	1.8	2.4	C612_0450 EZ703U	1380	2010	45.33	136/3	3200	3200	4500	24	10	74	70
114	462	764	1.8	2.6	C612_0390 EZ703U	1280	1600	39.40	1891/48	3200	3200	4500	23	10	74	70
129	409	677	1.6	3.2	C612_0350 EZ703U	1380	1720	34.87	1360/39	3200	3200	4500	25	10	74	70
129	555	1015	2.2	2.3	C612_0350 EZ705U	1380	2600	34.87	1360/39	3200	3200	4500	38	10	74	75
139	330	1084	1.4	3.9	C612_0320 EZ802U	1650	2900	32.41	1037/32	3200	3200	4500	60	10	74	84
139	380	629	1.7	3.0	C612_0320 EZ703U	1150	1440	32.41	1037/32	3200	3200	4500	24	10	74	70
139	516	943	2.1	2.5	C612_0320 EZ705U	1650	2900	32.41	1037/32	3200	3200	4500	36	10	74	75
164	279	918	1.3	4.3	C612_0270 EZ802U	1380	2600	27.43	192/7	3200	3200	4500	63	10	74	84
164	322	532	1.5	3.7	C612_0270 EZ703U	1280	1600	27.43	192/7	3200	3200	4500	27	10	74	70
164	436	798	2.1	2.8	C612_0270 EZ705U	1380	2600	27.43	192/7	3200	3200	4500	39	10	74	75
181	254	834	1.3	4.6	C612_0250 EZ802U	1650	2900	24.93	5185/208	3200	3200	4500	62	10	74	84
181	293	484	1.8	3.4	C612_0250 EZ703U	980	1230	24.93	5185/208	3200	3200	4500	25	10	74	70
181	397	725	2.0	2.9	C612_0250 EZ705U	1650	2900	24.93	5185/208	3200	3200	4500	38	10	74	75
199	231	759	1.3	4.9	C612_0230 EZ802U	1380	2600	22.67	68/3	3200	3200	4500	65	10	74	84
199	361	660	2.0	3.1	C612_0230 EZ705U	1380	2600	22.67	68/3	3200	3200	4500	41	10	74	75
230	230	380	1.7	4.0	C612_0195 EZ703U	910	1140	19.61	549/28	3200	3200	4500	27	10	74	70
230	312	571	2.0	3.4	C612_0195 EZ705U	1650	2560	19.61	549/28	3200	3200	4500	39	10	74	75
278	258	472	1.9	3.9	C612_0160 EZ705U	1630	2300	16.20	1037/64	3200	3200	4500	41	10	74	75

n_{2N} [rpm]	M_{2N} [Nm]	$M_{2,0}$ [Nm]	a_{th}	S	Type	M_{2acc} [Nm]	M_{2NOT} [Nm]	i	i_{exakt}	n_{1maxDB} EL1,2,3,4 [rpm]	n_{1maxDB} EL5,6 [rpm]	n_{1maxZB} [rpm]	J_1 [kgcm²]	$\Delta\varphi_2$ [arcmin]	C_2 [Nm/arcmin]	m [kg]
C7 (n_{1N} = 2000 rpm, $M_{2acc,max}$ = 2760 Nm)																
79	1073	1623	2.8	2.2	C712_0250 EZ805U	2540	3170	25.31	405/16	3100	3100	4500	141	10	122	138
86	983	1486	3.3	2.0	C712_0230 EZ805U	2300	4000	23.18	255/11	3100	3100	4500	147	10	122	138
97	876	1325	2.6	2.7	C712_0210 EZ805U	2760	4800	20.67	1323/64	3100	3100	4500	144	10	122	138
110	774	1171	2.9	2.6	C712_0185 EZ805U	2300	4000	18.26	420/23	2900	2900	4000	153	10	122	138
120	709	1073	2.5	3.1	C712_0165 EZ805U	2760	4800	16.73	1071/64	3100	3100	4500	148	10	122	138
146	582	880	2.5	3.4	C712_0135 EZ805U	2300	4000	13.73	4380/319	2900	2900	4000	162	10	122	138
152	559	845	2.4	3.7	C712_0130 EZ805U	2620	4800	13.18	4851/368	2900	2900	4000	154	10	122	138
170	499	754	2.4	3.9	C712_0120 EZ805U	2300	4000	11.76	1035/88	2600	2600	3500	168	10	122	138
202	420	636	2.3	4.4	C712_0099 EZ805U	1970	3610	9.912	4599/464	2900	2900	4000	164	10	122	138
236	360	544	2.2	4.9	C712_0085 EZ805U	1690	3090	8.490	4347/512	2600	2600	3500	171	10	122	138
C7 (n_{1N} = 3000 rpm, $M_{2acc,max}$ = 2760 Nm)																
13	1574	1766	1.7	1.3	C713_2230 EZ701U	2300	4000	222.5	29375/132	3100	3100	4500	9.2	10	122	114
16	1297	1455	1.5	1.5	C713_1830 EZ701U	2300	4000	183.4	24205/132	3100	3100	4500	9.3	10	122	114
22	972	1090	1.3	2.1	C713_1370 EZ701U	2300	4000	137.3	10575/77	3100	3100	4500	9.5	10	122	114
23	936	1050	1.3	2.1	C713_1320 EZ701U	2530	3710	132.4	33887/256	3100	3100	4500	9.3	10	122	114
23	1519	1822	2.1	1.3	C713_1320 EZ702U	2760	3710	132.4	33887/256	3100	3100	4500	15	10	122	116
30	701	787	1.2	2.7	C713_0990 EZ701U	1900	3170	99.14	6345/64	3100	3100	4500	9.5	10	122	114
30	1137	1365	2.0	1.6	C713_0990 EZ702U	2540	3170	99.14	6345/64	3100	3100	4500	15	10	122	116
37	573	642	1.2	3.1	C713_0810 EZ701U	1550	2820	80.97	20727/256	3100	3100	4500	9.7	10	122	114
37	929	1115	1.9	1.9	C713_0810 EZ702U	2260	2820	80.97	20727/256	3100	3100	4500	15	10	122	116
37	1277	1610	2.6	1.4	C713_0810 EZ703U	2260	2820	80.97	20727/256	3100	3100	4500	23	10	122	118
43	499	560	1.0	4.0	C712_0700 EZ701U	1350	2650	69.55	765/11	3100	3100	4500	11	10	122	101
43	810	971	1.6	2.5	C712_0700 EZ702U	2120	2650	69.55	765/11	3100	3100	4500	16	10	122	103
43	1113	1403	2.1	1.8	C712_0700 EZ703U	2120	2650	69.55	765/11	3100	3100	4500	24	10	122	105
53	408	457	0.9	4.7	C712_0570 EZ701U	1100	2390	56.82	625/11	3100	3100	4500	12	10	122	101
53	661	794	1.5	2.9	C712_0570 EZ702U	1910	2390	56.82	625/11	3100	3100	4500	17	10	122	103
53	909	1146	2.0	2.1	C712_0570 EZ703U	1910	2390	56.82	625/11	3100	3100	4500	25	10	122	105
53	1174	1664	2.5	1.7	C712_0570 EZ705U	2300	4000	56.82	625/11	3100	3100	4500	37	10	122	111
59	1084	1803	2.0	2.2	C713_0510 EZ802U	2760	4800	50.85	18711/368	3100	3100	4500	61	10	122	132
64	967	1371	2.3	2.1	C712_0470 EZ705U	2300	4000	46.82	515/11	3100	3100	4500	39	10	122	111
64	1013	1685	2.4	2.0	C712_0470 EZ802U	2300	4000	46.82	515/11	3100	3100	4500	63	10	122	119
73	294	330	1.1	4.7	C712_0410 EZ701U	800	1730	41.02	2625/64	3100	3100	4500	12	10	122	101
73	477	573	1.7	2.9	C712_0410 EZ702U	1380	1730	41.02	2625/64	3100	3100	4500	17	10	122	103
73	656	828	2.4	2.1	C712_0410 EZ703U	1380	1730	41.02	2625/64	3100	3100	4500	25	10	122	105
73	847	1202	2.0	2.5	C712_0410 EZ705U	2510	4070	41.02	2625/64	3100	3100	4500	37	10	122	111
73	887	1476	2.1	2.4	C712_0410 EZ802U	2510	4070	41.02	2625/64	3100	3100	4500	62	10	122	119
73	1058	1918	2.5	2.0	C712_0410 EZ803U	2510	4070	41.02	2625/64	3100	3100	4500	87	10	122	125
86	408	490	1.4	3.8	C712_0350 EZ702U	1390	1960	35.07	2700/77	3100	3100	4500	21	10	122	103
86	561	707	1.9	2.8	C712_0350 EZ703U	1570	1960	35.07	2700/77	3100	3100	4500	29	10	122	105
86	724	1027	2.0	2.8	C712_0350 EZ705U	2300	4000	35.07	2700/77	3100	3100	4500	42	10	122	111
86	758	1262	2.0	2.6	C712_0350 EZ802U	2300	4000	35.07	2700/77	3100	3100	4500	66	10	122	119
86	905	1639	2.4	2.2	C712_0350 EZ803U	2300	4000	35.07	2700/77	3100	3100	4500	91	10	122	125
89	698	990	1.6	3.4	C712_0340 EZ705U	2760	3710	33.80	2163/64	3100	3100	4500	39	10	122	111
89	731	1216	1.7	3.3	C712_0340 EZ802U	2760	3710	33.80	2163/64	3100	3100	4500	63	10	122	119
89	872	1580	2.0	2.8	C712_0340 EZ803U	2760	3710	33.80	2163/64	3100	3100	4500	88	10	122	125
105	592	839	1.8	3.4	C712_0290 EZ705U	2300	3910	28.64	315/11	3100	3100	4500	44	10	122	111
105	619	1031	1.9	3.2	C712_0290 EZ802U	2300	3910	28.64	315/11	3100	3100	4500	69	10	122	119
105	739	1339	2.2	2.7	C712_0290 EZ803U	2300	4000	28.64	315/11	3100	3100	4500	94	10	122	125
119	295	354	1.7	3.8	C712_0250 EZ702U	1010	1410	25.31	405/16	3100	3100	4500	22	10	122	103
119	405	511	2.3	2.8	C712_0250 EZ703U	1130	1410	25.31	405/16	3100	3100	4500	29	10	122	105
119	523	742	1.5	4.2	C712_0250 EZ705U	2540	3170	25.31	405/16	3100	3100	4500	42	10	122	111
119	548	911	1.6	4.1	C712_0250 EZ802U	2460	3170	25.31	405/16	3100	3100	4500	66	10	122	119
119	653	1183	1.9	3.4	C712_0250 EZ803U	2540	3170	25.31	405/16	3100	3100	4500	91	10	122	125
129	479	679	1.6	4.2	C712_0230 EZ705U	2300	3770	23.18	255/11	3100	3100	4500	48	10	122	111
129	501	834	1.7	4.0	C712_0230 EZ802U	2250	3770	23.18	255/11	3100	3100	4500	72	10	122	119
129	598	1084	2.0	3.3	C712_0230 EZ803U	2300	4000	23.18	255/11	3100	3100	4500	98	10	122	125
145	427	606	1.4	4.9	C712_0210 EZ705U	2090	2820	20.67	1323/64	3100	3100	4500	45	10	122	111
145	447	744	1.5	4.6	C712_0210 EZ802U	2010	2820	20.67	1323/64	3100	3100	4500	69	10	122	119
145	533	966	1.8	3.9	C712_0210 EZ803U	2760	4800	20.67	1323/64	3100	3100	4500	94	10	122	125
164	471	854	1.8	4.2	C712_0185 EZ803U	2300	4000	18.26	420/23	2900	2900	4000	104	10	122	125
179	432	782	1.7	4.5	C712_0165 EZ803U	2350	4800	16.73	1071/64	3100	3100	4500	99	10	122	125
C7 (n_{1N} = 4500 rpm, $M_{2acc,max}$ = 2760 Nm)																
45	1147	1896	2.3	1.4	C713_0990 EZ703U	2540	3170	99.14	6345/64	3100	3100	4500	23	10	122	118
56	937	1548	2.2	1.6	C713_0810 EZ703U	2260	2820	80.97	20727/256	3100	3100	4500	23	10	122	118

n_{2N} [rpm]	M_{2N} [Nm]	$M_{2,0}$ [Nm]	a_{th}	S	Type	M_{2acc} [Nm]	M_{2NOT} [Nm]	i	i_{exakt}	n_{1maxDB} EL1,2,3,4 [rpm]	n_{1maxDB} EL5,6 [rpm]	n_{1maxZB} [rpm]	J_1 [kgcm²]	$\Delta\varphi_2$ [arcmin]	C_2 [Nm/arcmin]	m [kg]
C7 (n_{1N} = 4500 rpm, $M_{2acc,max}$ = 2760 Nm)																
65	816	1349	1.6	2.5	C712_0700 EZ703U	2120	2650	69.55	765/11	3100	3100	4500	24	10	122	105
70	648	2129	1.1	3.7	C713_0650 EZ802U	2760	4800	64.55	4131/64	3100	3100	4500	61	10	122	132
79	667	1102	1.5	2.9	C712_0570 EZ703U	1910	2390	56.82	625/11	3100	3100	4500	25	10	122	105
79	904	1653	1.9	2.2	C712_0570 EZ705U	2300	4000	56.82	625/11	3100	3100	4500	37	10	122	111
89	510	1677	1.0	4.4	C713_0510 EZ802U	2760	4800	50.85	18711/368	3100	3100	4500	61	10	122	132
96	477	1567	1.1	4.2	C712_0470 EZ802U	2300	4000	46.82	515/11	3100	3100	4500	63	10	122	119
96	745	1362	1.7	2.7	C712_0470 EZ705U	2300	4000	46.82	515/11	3100	3100	4500	39	10	122	111
110	481	796	1.7	2.9	C712_0410 EZ703U	1380	1730	41.02	2625/64	3100	3100	4500	25	10	122	105
110	652	1194	1.6	3.2	C712_0410 EZ705U	2510	4070	41.02	2625/64	3100	3100	4500	37	10	122	111
128	412	680	1.4	3.8	C712_0350 EZ703U	1570	1960	35.07	2700/77	3100	3100	4500	29	10	122	105
128	558	1020	1.5	3.6	C712_0350 EZ705U	2300	4000	35.07	2700/77	3100	3100	4500	42	10	122	111
133	538	983	1.4	4.0	C712_0340 EZ705U	2760	3710	33.80	2163/64	3100	3100	4500	39	10	122	111
157	456	833	1.4	4.4	C712_0290 EZ705U	2300	3910	28.64	315/11	3100	3100	4500	44	10	122	111
178	297	491	1.7	3.8	C712_0250 EZ703U	1130	1410	25.31	405/16	3100	3100	4500	29	10	122	105
178	403	737	1.3	4.8	C712_0250 EZ705U	2540	3170	25.31	405/16	3100	3100	4500	42	10	122	111
C8 (n_{1N} = 2000 rpm, $M_{2acc,max}$ = 4800 Nm)																
44	1930	2920	2.7	1.9	C812_0460 EZ805U	4140	7200	45.54	592/13	2900	2900	4300	144	10	204	198
50	1693	2561	2.5	2.2	C812_0400 EZ805U	3690	4610	39.94	2596/65	2900	2900	4300	142	10	145	198
57	1498	2265	2.4	2.4	C812_0350 EZ805U	4140	7200	35.33	106/3	2900	2900	4300	150	10	204	198
60	1424	2153	2.0	3.0	C812_0340 EZ805U	4800	8400	33.59	2183/65	2900	2900	4300	145	10	145	198
73	1164	1761	2.1	3.1	C812_0270 EZ805U	4140	7200	27.47	412/15	2900	2900	4300	159	10	204	198
77	1105	1671	1.8	3.8	C812_0260 EZ805U	4800	7450	26.06	3127/120	2900	2900	4300	151	10	145	198
86	983	1487	1.9	3.7	C812_0230 EZ805U	4140	7200	23.19	1600/69	2900	2900	4300	166	10	204	198
99	859	1299	1.7	4.5	C812_0200 EZ805U	4030	6760	20.26	6077/300	2900	2900	4300	160	10	145	198
116	733	1108	1.7	4.9	C812_0175 EZ805U	3440	6290	17.29	1504/87	2700	2700	3800	183	10	204	198
117	725	1096	1.6	5.0	C812_0170 EZ805U	3400	6220	17.10	1180/69	2900	2900	4300	168	10	145	198
C8 (n_{1N} = 3000 rpm, $M_{2acc,max}$ = 4800 Nm)																
11	1909	2141	1.1	1.8	C813_2700 EZ701U	4140	6750	269.8	7285/27	2900	2900	4300	9.4	10	204	173
14	1501	1683	1.1	2.2	C813_2120 EZ701U	4060	6250	212.1	8272/39	2900	2900	4300	9.6	10	204	173
14	2433	2920	1.7	1.4	C813_2120 EZ702U	4140	6250	212.1	8272/39	2900	2900	4300	15	10	204	175
17	1262	1415	1.0	2.5	C813_1780 EZ701U	3410	5250	178.4	6956/39	2900	2900	4300	9.8	10	204	173
17	2046	2455	1.6	1.6	C813_1780 EZ702U	4140	5250	178.4	6956/39	2900	2900	4300	15	10	204	175
22	979	1098	0.9	3.1	C813_1380 EZ701U	2650	4650	138.4	2491/18	2900	2900	4300	10	10	204	173
22	1588	1905	1.5	1.9	C813_1380 EZ702U	3720	4650	138.4	2491/18	2900	2900	4300	15	10	204	175
22	2183	2752	2.1	1.4	C813_1380 EZ703U	3720	4650	138.4	2491/18	2900	2900	4300	23	10	204	177
28	761	854	0.9	3.8	C813_1080 EZ701U	2060	4210	107.6	4841/45	2900	2900	4300	11	10	204	173
28	1234	1481	1.4	2.3	C813_1080 EZ702U	3370	4210	107.6	4841/45	2900	2900	4300	16	10	204	175
28	1697	2139	1.9	1.7	C813_1080 EZ703U	3370	4210	107.6	4841/45	2900	2900	4300	24	10	204	177
30	2143	3565	2.0	1.7	C813_1010 EZ802U	4800	7450	100.5	28143/280	2900	2900	4300	61	10	204	191
33	643	721	0.8	4.3	C813_0910 EZ701U	1740	3570	90.82	18800/207	2900	2900	4300	11	10	204	173
33	1042	1250	1.4	2.6	C813_0910 EZ702U	2860	3570	90.82	18800/207	2900	2900	4300	16	10	204	175
33	1433	1806	1.9	1.9	C813_0910 EZ703U	2860	3570	90.82	18800/207	2900	2900	4300	24	10	204	177
34	1907	3172	1.9	1.9	C813_0890 EZ802U	4140	7200	89.44	14400/161	2900	2900	4300	62	10	204	191
38	561	630	1.0	3.8	C813_0790 EZ701U	1520	3110	79.34	285619/3600	2900	2900	4300	11	10	204	173
38	910	1092	1.6	2.3	C813_0790 EZ702U	2490	3110	79.34	285619/3600	2900	2900	4300	16	10	204	175
38	1251	1578	2.3	1.7	C813_0790 EZ703U	2490	3110	79.34	285619/3600	2900	2900	4300	24	10	204	177
38	1666	2771	1.8	2.1	C813_0780 EZ802U	4800	6760	78.13	54693/700	2900	2900	4300	61	10	204	191
38	1987	3600	2.2	1.7	C813_0780 EZ803U	4800	6760	78.13	54693/700	2900	2900	4300	87	10	204	197
44	1490	2479	1.7	2.4	C812_0690 EZ802U	4140	6750	68.89	620/9	2900	2900	4300	64	10	204	179
45	1406	2340	1.8	2.4	C813_0660 EZ802U	4800	6220	65.96	10620/161	2900	2900	4300	62	10	204	191
45	1677	3040	2.1	2.0	C813_0660 EZ803U	4800	6220	65.96	10620/161	2900	2900	4300	87	10	204	197
55	1171	1949	1.5	3.1	C812_0540 EZ802U	4140	6250	54.15	704/13	2900	2900	4300	67	10	204	179
55	1397	2532	1.8	2.6	C812_0540 EZ803U	4140	6250	54.15	704/13	2900	2900	4300	92	10	204	185
61	1048	1744	1.7	2.9	C813_0490 EZ802U	3710	4640	49.18	49914/1015	2900	2900	4300	63	10	204	191
61	1251	2266	2.0	2.4	C813_0490 EZ803U	3710	4640	49.18	49914/1015	2900	2900	4300	89	10	204	197
66	985	1639	1.4	3.7	C812_0460 EZ802U	4140	5250	45.54	592/13	2900	2900	4300	70	10	204	179
66	1175	2129	1.6	3.1	C812_0460 EZ803U	4140	7200	45.54	592/13	2900	2900	4300	95	10	204	185
75	864	1437	1.3	4.3	C812_0400 EZ802U	3690	4610	39.94	2596/65	2900	2900	4300	67	10	145	179
75	1030	1867	1.5	3.6	C812_0400 EZ803U	3690	4610	39.94	2596/65	2900	2900	4300	92	10	145	185
85	764	1272	1.2	4.7	C812_0350 EZ802U	3430	4650	35.33	106/3	2900	2900	4300	76	10	204	179
85	912	1652	1.4	3.9	C812_0350 EZ803U	4140	7200	35.33	106/3	2900	2900	4300	101	10	204	185
89	726	1209	1.4	4.3	C812_0340 EZ802U	3100	3870	33.59	2183/65	2900	2900	4300	70	10	145	179
89	867	1570	1.3	4.6	C812_0340 EZ803U	4720	8400	33.59	2183/65	2900	2900	4300	96	10	145	185
115	564	938	1.4	4.9	C812_0260 EZ802U	2530	3430	26.06	3127/120	2900	2900	4300	76	10	145	179

n_{2N} [rpm]	M_{2N} [Nm]	$M_{2,0}$ [Nm]	a_{th}	S	Type	M_{2acc} [Nm]	M_{2NOT} [Nm]	i	i_{exakt}	n_{1maxDB} EL1,2,3,4 [rpm]	n_{1maxDB} EL5,6 [rpm]	n_{1maxZB} [rpm]	J_1 [kgcm²]	$\Delta\varphi_2$ [arcmin]	C_2 [Nm/arcmin]	m [kg]
C9 (n_{1N} = 3000 rpm, $M_{2acc,max}$ = 6500 Nm)																
27	2354	3917	1.4	2.4	C913_1100 EZ802U	6500	10000	110.4	21645/196	2800	2800	4000	64	10	393	298
39	1657	2757	1.7	2.4	C913_0780 EZ802U	5630	7040	77.73	60939/784	2800	2800	4000	64	10	393	298
39	1977	3582	2.0	2.0	C913_0780 EZ803U	5630	7040	77.73	60939/784	2800	2800	4000	89	10	393	304

7.3 Dimensional drawings

In this chapter you can find the dimensions of the geared motors.

There is a dimensional drawing for every possible shaft/housing design, each with the tables for gear unit dimensions, motor dimensions and geared motor dimensions.

Dimensions can exceed the specifications of ISO 2768-mK due to casting tolerances or accumulation of individual tolerances.

We reserve the right to make dimensional changes due to ongoing technical development.

You can download 3D models of our standard drives at http://configurator.stoeber.de.

Combination options and the dimensions of forced ventilated geared motors can also be found at http://configurator.stoeber.de.

Tolerances

Axis height in accordance with DIN 747	Tolerance
Up to 50 mm	-0.4 mm
Up to 250 mm	-0.5 mm
Up to 630 mm	-0.6 mm

Solid shaft	Tolerance
Shaft ∅ fit ≤ 50 mm	DIN 748-1, ISO k6
Shaft ∅ fit > 50 mm	DIN 748-1, ISO m6
Feather keys	DIN 6885-1, high form A

Flange	Pilot tolerance
Up to 300 mm	ISO j6
Starting at 350 mm	ISO h6

Centering holes in solid shafts in accordance with DIN 332-2, DR shape

Thread size	M4	M5	M6	M8	M10	M12	M16	M20	M24
Thread depth [mm]	10	12.5	16	19	22	28	36	42	50

7.3.1 Solid shaft design with feather key, N housing design (foot)

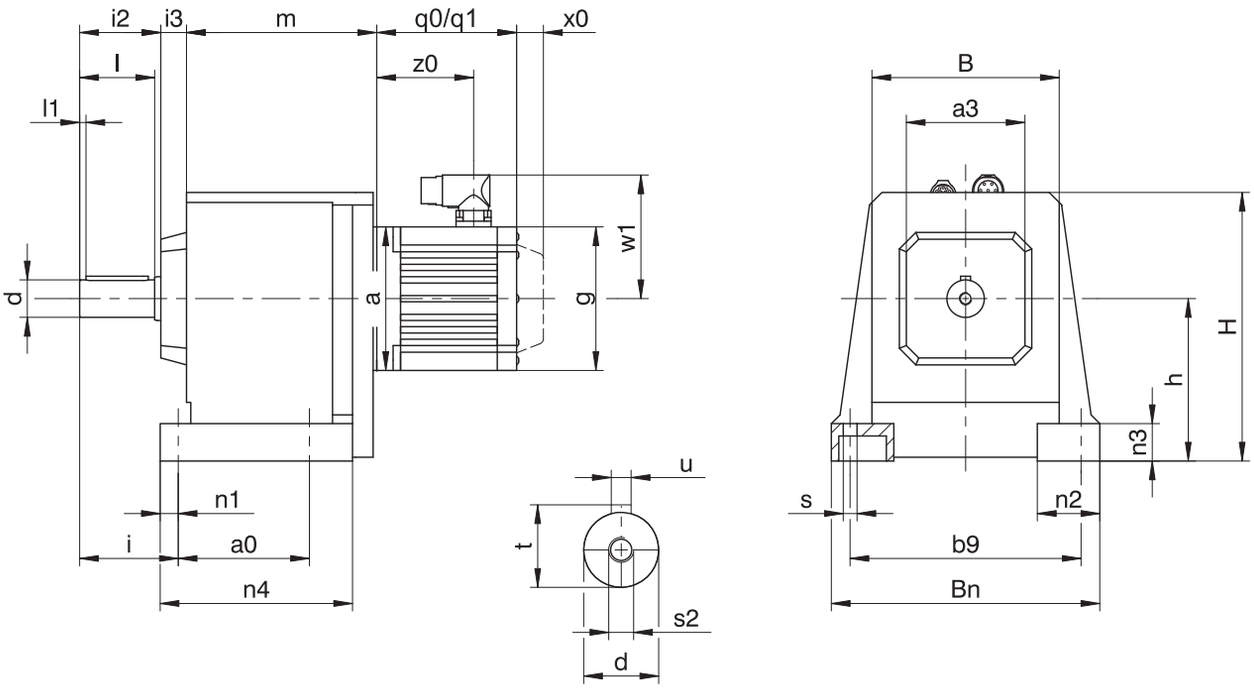

q0	Applies to motors without brake.	q1	Applies to motors with brake.
x0	Applies to encoders using an optical measuring method.	w1	Different for the One Cable Solution (OCS), see the chapter [▸ 17.4]

C203, C303, C612, C613: Motor adapter and gear unit are sometimes non-coaxial.

Options: C0 – C5 also available with solid shaft without feather key; on request starting at C6.

Dimensions of gear units

Type	a0	a3	b9	B	Bn	Ød	h	H	i	i2	i3	l	l1	n1	n2	n3	n4	Øs	s2	t	u
C0	62	60	110	92	132	20_{k6}	82	144	55	44	13	40	3	11	35	20	95.0	7	M6	22.5	A6×6×32
C1	70	80	150	124	176	25_{k6}	102	177	67	54	15	50	5	13	42	25	117.5	9	M10	28.0	A8×7×40
C2	85	95	170	138	200	30_{k6}	115	195	79	65	21	60	5	14	50	30	134.5	11	M10	33.0	A8×7×50
C3	105	95	185	150	215	30_{k6}	130	215	79	65	20	60	5	14	50	30	153.5	11	M10	33.0	A8×7×50
C4	110	110	220	175	255	40_{k6}	145	245	105	86	20	80	5	19	60	35	180.0	14	M16	43.0	A12×8×70
C5	130	130	245	192	290	40_{k6}	170	290	108	86	21	80	5	22	70	40	197.0	18	M16	43.0	A12×8×70
C6	215	177	245	225	300	50_{k6}	200	315	130	106	47	100	5	25	75	40	265.0	18	M16	53.5	A14×9×90
C7	235	192	300	265	365	60_{m6}	235	375	163	127	58	120	5	25	90	50	285.0	18	M20	64.0	A18×11×100
C8	300	223	340	310	435	70_{m6}	290	450	190	148	70	140	5	29	95	55	360.0	22	M20	74.5	A20×12×125
C9	340	277	400	365	510	90_{m6}	340	530	222	178	78	170	5	34	110	60	410.0	26	M24	95.0	A25×14×140

Dimensions of motors

Type	□g	q0	q1	w1	x0	z0
EZ301U	72	114.0	154.0	55.5	21	78.5
EZ302U	72	136.0	176.0	55.5	21	100.5
EZ303U	72	158.0	198.0	55.5	21	122.5
EZ401U	98	118.5	167.0	91.0	22	76.5
EZ402U	98	143.5	192.0	91.0	22	101.5
EZ404U	98	193.5	242.0	91.0	22	151.5
EZ501U	115	112.0	166.5	100.0	22	77.5
EZ502U	115	137.0	191.5	100.0	22	102.5
EZ503U	115	162.0	216.5	100.0	22	127.5
EZ505U	115	212.0	266.5	100.0	22	177.5
EZ701U	145	125.0	184.0	115.0	22	87.0
EZ702U	145	150.0	209.0	115.0	22	112.0
EZ703U	145	175.0	234.0	115.0	22	137.0
EZ705U	145	230.0	289.0	134.0	22	188.0
EZ802U	190	232.5	309.5	156.5	22	178.5
EZ803U	190	273.5	350.5	156.5	22	219.5
EZ805U	190	355.5	432.5	156.5	22	301.5

Dimensions of geared motors

Type	EZ3		EZ4		EZ5		EZ7		EZ8	
	a	m	a	m	a	m	a	m	a	m
C002	□72	97.5	□98	97.5	□115	101.5	□145	103.5	–	–
C102	□72	118.0	□98	118.0	□115	122.0	□145	124.0	–	–
C103	∅140	155.0	–	–	–	–	–	–	–	–
C202	∅140	129.0	∅140	129.0	□115	133.0	□145	135.0	–	–
C203	∅140	166.0	–	–	–	–	–	–	–	–
C302	–	–	–	–	∅160	152.5	□145	154.5	□190	157.5
C303	∅140	185.5	∅140	185.5	–	–	–	–	–	–
C402	–	–	–	–	∅160	180.0	□145	182.0	□190	185.0
C403	–	–	–	–	∅160	223.0	–	–	–	–
C502	–	–	–	–	∅160	200.0	∅200	202.0	□190	205.0
C503	–	–	–	–	∅160	243.0	–	–	–	–
C612	–	–	–	–	–	–	∅200	180.0	□190	183.0
C613	–	–	–	–	∅160	222.0	∅200	242.0	–	–
C712	–	–	–	–	–	–	∅200	201.0	∅250	203.0
C713	–	–	–	–	–	–	∅200	262.0	∅250	274.0
C812	–	–	–	–	–	–	–	–	∅250	237.0
C813	–	–	–	–	–	–	∅200	296.0	∅250	308.0
C913	–	–	–	–	–	–	–	–	∅250	337.0

7.3.2 Solid shaft design with feather key, G housing design (pitch circle diameter)

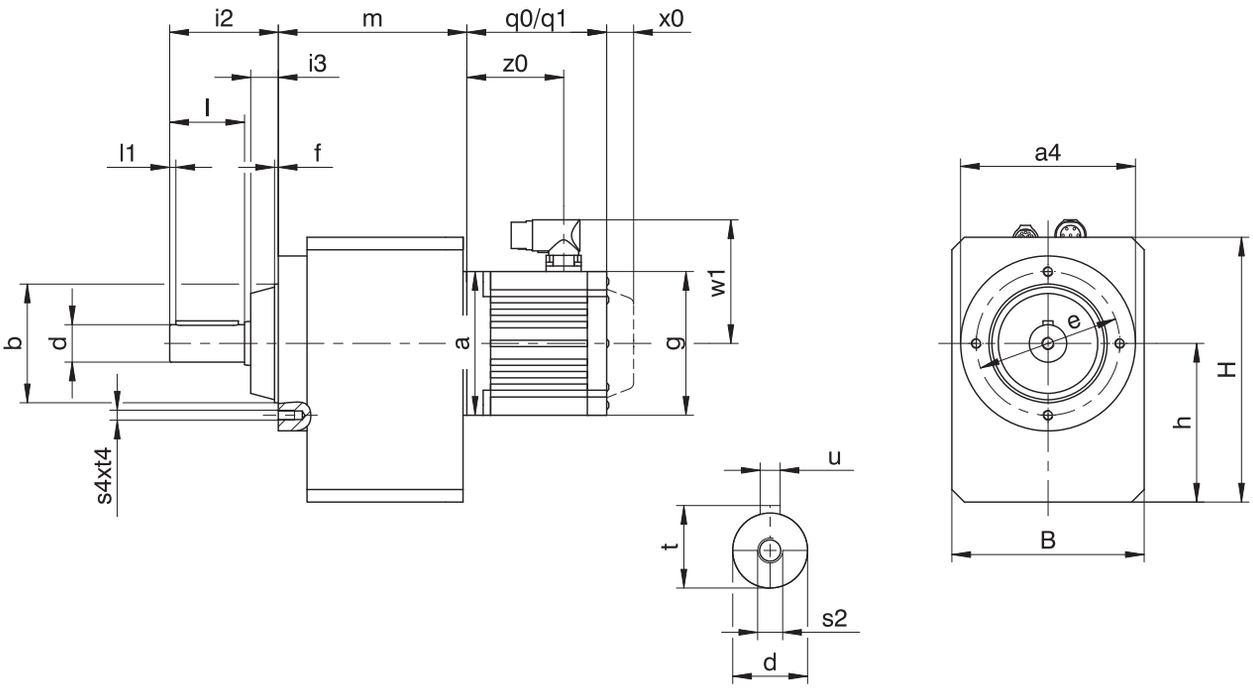

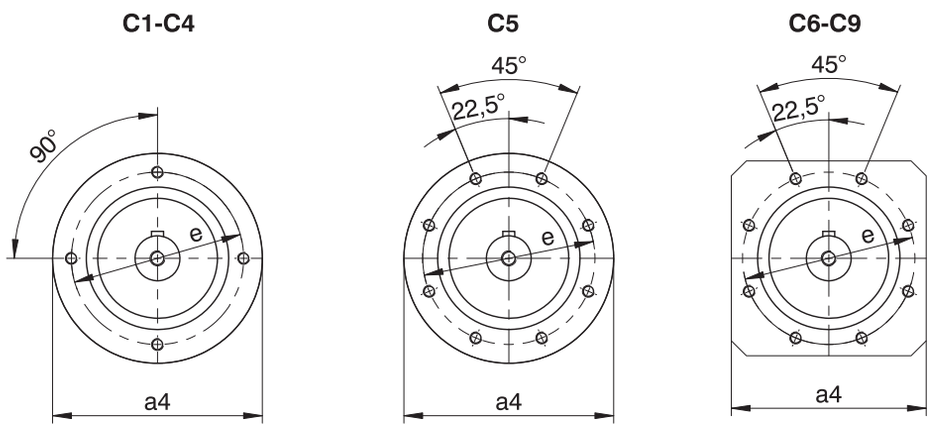

q0	Applies to motors without brake.	q1	Applies to motors with brake.
x0	Applies to encoders using an optical measuring method.	w1	Different for the One Cable Solution (OCS), see the chapter [▸ 17.4]

C203, C303, C612, C613: Motor adapter and gear unit are sometimes non-coaxial.

Options: C0 – C5 also available with solid shaft without feather key; on request starting at C6.

Dimensions of gear units

Type	a4	Øb	B	Ød	Øe	f	h	H	i2	i3	l	l1	s2	s4	t	t4	u
C0	∅87	55_{j6}	97	20_{k6}	75	3.0	79.0	141.0	58	14	40	3	M6	M6	22.5	10	A6×6×32
C1	∅120	80_{j6}	130	25_{k6}	100	3.0	100.0	175.0	71	17	50	5	M10	M6	28.0	13	A8×7×40
C2	∅140	95_{j6}	142	30_{k6}	115	3.0	112.0	192.0	87	22	60	5	M10	M8	33.0	13	A8×7×50
C3	∅140	95_{j6}	154	30_{k6}	115	3.0	127.0	212.0	87	22	60	5	M10	M8	33.0	13	A8×7×50
C4	∅160	110_{j6}	178	40_{k6}	130	3.5	142.5	242.5	108	22	80	5	M16	M10	43.0	16	A12×8×70
C5	∅192	130_{j6}	195	40_{k6}	165	3.5	166.0	286.0	109	23	80	5	M16	M10	43.0	16	A12×8×70
C6	□180	140_{j6}	225	50_{k6}	165	5.0	195.0	310.0	136	30	100	5	M16	M10	53.5	16	A14×9×90
C7	□195	155_{j6}	265	60_{m6}	185	8.0	231.0	371.0	164	37	120	5	M20	M12	64.0	19	A18×11×100
C8	□226	185_{j6}	310	70_{m6}	215	5.0	285.0	445.0	185	37	140	5	M20	M12	74.5	19	A20×12×125
C9	□280	230_{j6}	365	90_{m6}	265	5.0	334.0	524.0	220	42	170	5	M24	M16	95.0	26	A25×14×140

Dimensions of motors

Type	□g	q0	q1	w1	x0	z0
EZ301U	72	114.0	154.0	55.5	21	78.5
EZ302U	72	136.0	176.0	55.5	21	100.5
EZ303U	72	158.0	198.0	55.5	21	122.5
EZ401U	98	118.5	167.0	91.0	22	76.5
EZ402U	98	143.5	192.0	91.0	22	101.5
EZ404U	98	193.5	242.0	91.0	22	151.5
EZ501U	115	112.0	166.5	100.0	22	77.5
EZ502U	115	137.0	191.5	100.0	22	102.5
EZ503U	115	162.0	216.5	100.0	22	127.5
EZ505U	115	212.0	266.5	100.0	22	177.5
EZ701U	145	125.0	184.0	115.0	22	87.0
EZ702U	145	150.0	209.0	115.0	22	112.0
EZ703U	145	175.0	234.0	115.0	22	137.0
EZ705U	145	230.0	289.0	134.0	22	188.0
EZ802U	190	232.5	309.5	156.5	22	178.5
EZ803U	190	273.5	350.5	156.5	22	219.5
EZ805U	190	355.5	432.5	156.5	22	301.5

Dimensions of geared motors

Type	EZ3		EZ4		EZ5		EZ7		EZ8	
	a	m	a	m	a	m	a	m	a	m
C002	□72	96	□98	96	□115	100	□145	102	–	–
C102	□72	116	□98	116	□115	120	□145	122	–	–
C103	∅140	153	–	–	–	–	–	–	–	–
C202	∅140	128	∅140	128	□115	132	□145	134	–	–
C203	∅140	165	–	–	–	–	–	–	–	–
C302	–	–	–	–	∅160	151	□145	153	□190	156
C303	∅140	184	∅140	184	–	–	–	–	–	–
C402	–	–	–	–	∅160	178	□145	180	□190	183
C403	–	–	–	–	∅160	221	–	–	–	–
C502	–	–	–	–	∅160	198	∅200	200	□190	203
C503	–	–	–	–	∅160	241	–	–	–	–
C612	–	–	–	–	–	–	∅200	197	□190	200
C613	–	–	–	–	∅160	239	∅200	259	–	–
C712	–	–	–	–	–	–	∅200	222	∅250	224
C713	–	–	–	–	–	–	∅200	283	∅250	295
C812	–	–	–	–	–	–	–	–	∅250	270
C813	–	–	–	–	–	–	∅200	329	∅250	341
C913	–	–	–	–	–	–	–	–	∅250	373

7.3.3 Solid shaft design with feather key, F housing design (round flange)

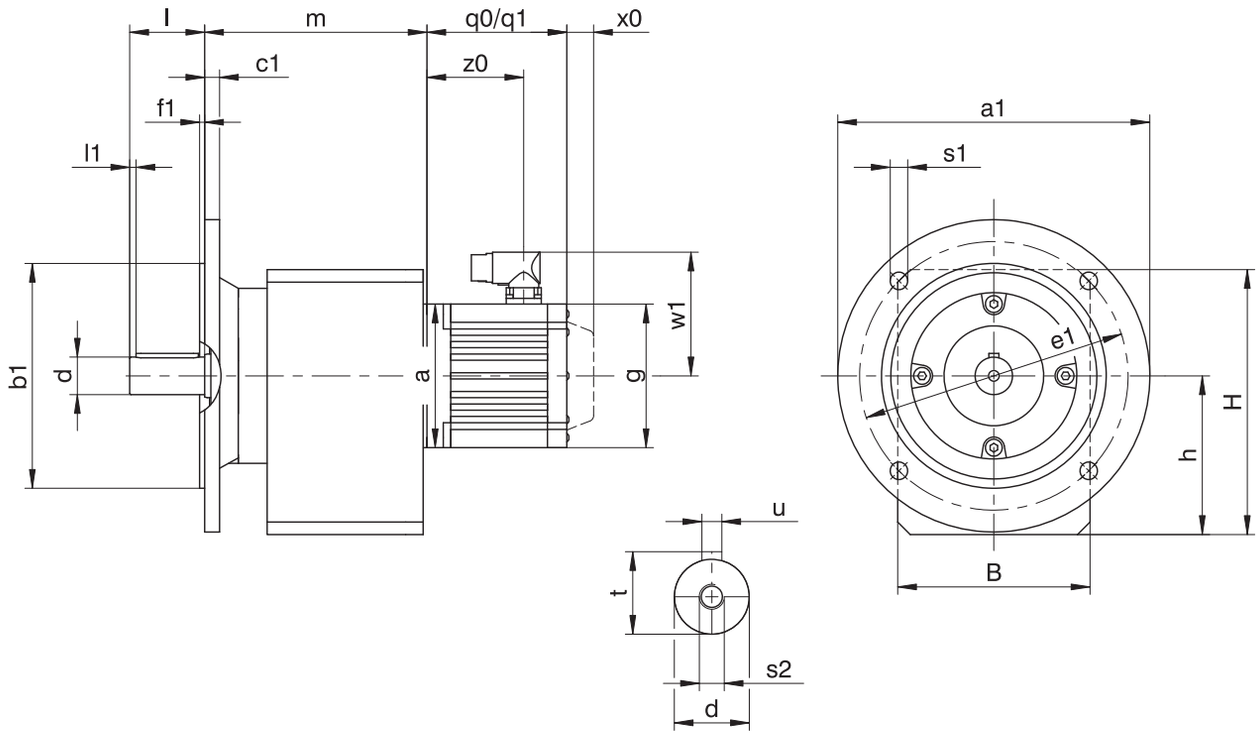

q0	Applies to motors without brake.	q1	Applies to motors with brake.
x0	Applies to encoders using an optical measuring method.	w1	Different for the One Cable Solution (OCS), see the chapter [▸ 17.4]

C203, C303, C612, C613: Motor adapter and gear unit are sometimes non-coaxial.

Options: C0 – C5 also available with solid shaft without feather key; on request starting at C6.

Dimensions of gear units

Type	Øa1	Øb1	B	c1	Ød	Øe1	f1	h	H	l	l1	Øs1	s2	t	u
C0	160	110_{j6}	97	10	20_{k6}	130	3.0	79.0	141.0	40	3	9	M6	22.5	A6×6×32
C1	200	130_{j6}	130	12	25_{k6}	165	3.5	100.0	175.0	50	5	11	M10	28.0	A8×7×40
C2	200	130_{j6}	142	12	30_{k6}	165	3.5	112.0	192.0	60	5	11	M10	33.0	A8×7×50
C3	250	180_{j6}	154	12	30_{k6}	215	4.0	127.0	212.0	60	5	14	M10	33.0	A8×7×50
C4	250	180_{j6}	178	14	40_{k6}	215	4.0	142.5	242.5	80	5	14	M16	43.0	A12×8×70
C5	300	230_{j6}	195	16	40_{k6}	265	4.0	166.0	286.0	80	5	14	M16	43.0	A12×8×70
C6	300	230_{j6}	225	17	50_{k6}	265	4.0	195.0	310.0	100	5	14	M16	53.5	A14×9×90
C7	350	250_{h6}	265	18	60_{m6}	300	5.0	231.0	371.0	120	5	18	M20	64.0	A18×11×100
C8	400	300_{h6}	310	20	70_{m6}	350	5.0	285.0	445.0	140	5	18	M20	74.5	A20×12×125
C9	450	350_{h6}	365	23	90_{m6}	400	5.0	334.0	524.0	170	5	18	M24	95.0	A25×14×140

Dimensions of additional round flanges

Type	Øa1	Øb1	c1	Øe1	f1	Øs1
C0	120	80_{j6}	10	100	3.0	7
C0	140	95_{j6}	10	115	3.0	9
C1	140	95_{j6}	8	115	3.5	9
C1	160	110_{j6}	10	130	3.5	9
C2	160	110_{j6}	10	130	3.5	9
C2	250	180_{j6}	12	215	4.0	14
C3	160	110_{j6}	10	130	3.5	9
C3	200	130_{j6}	12	165	3.5	11
C4	200	130_{j6}	14	165	3.5	11
C4	300	230_{j6}	14	265	4.0	14
C5	250	180_{j6}	14	215	4.0	14
C8	350	250_{h6}	18	300	5.0	18
C8	450	350_{h6}	20	400	5.0	18

Dimensions of motors

Type	□g	q0	q1	w1	x0	z0
EZ301U	72	114.0	154.0	55.5	21	78.5
EZ302U	72	136.0	176.0	55.5	21	100.5
EZ303U	72	158.0	198.0	55.5	21	122.5
EZ401U	98	118.5	167.0	91.0	22	76.5
EZ402U	98	143.5	192.0	91.0	22	101.5
EZ404U	98	193.5	242.0	91.0	22	151.5
EZ501U	115	112.0	166.5	100.0	22	77.5
EZ502U	115	137.0	191.5	100.0	22	102.5
EZ503U	115	162.0	216.5	100.0	22	127.5
EZ505U	115	212.0	266.5	100.0	22	177.5
EZ701U	145	125.0	184.0	115.0	22	87.0
EZ702U	145	150.0	209.0	115.0	22	112.0
EZ703U	145	175.0	234.0	115.0	22	137.0
EZ705U	145	230.0	289.0	134.0	22	188.0
EZ802U	190	232.5	309.5	156.5	22	178.5
EZ803U	190	273.5	350.5	156.5	22	219.5
EZ805U	190	355.5	432.5	156.5	22	301.5

Dimensions of geared motors

Type	EZ3		EZ4		EZ5		EZ7		EZ8	
	a	m	a	m	a	m	a	m	a	m
C002	□72	114	□98	114	□115	118	□145	120	–	–
C102	□72	137	□98	137	□115	141	□145	143	–	–
C103	∅140	174	–	–	–	–	–	–	–	–
C202	∅140	155	∅140	155	□115	159	□145	161	–	–
C203	∅140	192	–	–	–	–	–	–	–	–
C302	–	–	–	–	∅160	178	□145	180	□190	183
C303	∅140	211	∅140	211	–	–	–	–	–	–
C402	–	–	–	–	∅160	206	□145	208	□190	211
C403	–	–	–	–	∅160	249	–	–	–	–
C502	–	–	–	–	∅160	227	∅200	229	□190	232
C503	–	–	–	–	∅160	270	–	–	–	–
C612	–	–	–	–	–	–	∅200	233	□190	236
C613	–	–	–	–	∅160	275	∅200	295	–	–
C712	–	–	–	–	–	–	∅200	266	∅250	268
C713	–	–	–	–	–	–	∅200	327	∅250	339
C812	–	–	–	–	–	–	–	–	∅250	315
C813	–	–	–	–	–	–	∅200	374	∅250	386
C913	–	–	–	–	–	–	–	–	∅250	423

7.3.4 Solid shaft design with feather key, Q housing design (square flange)

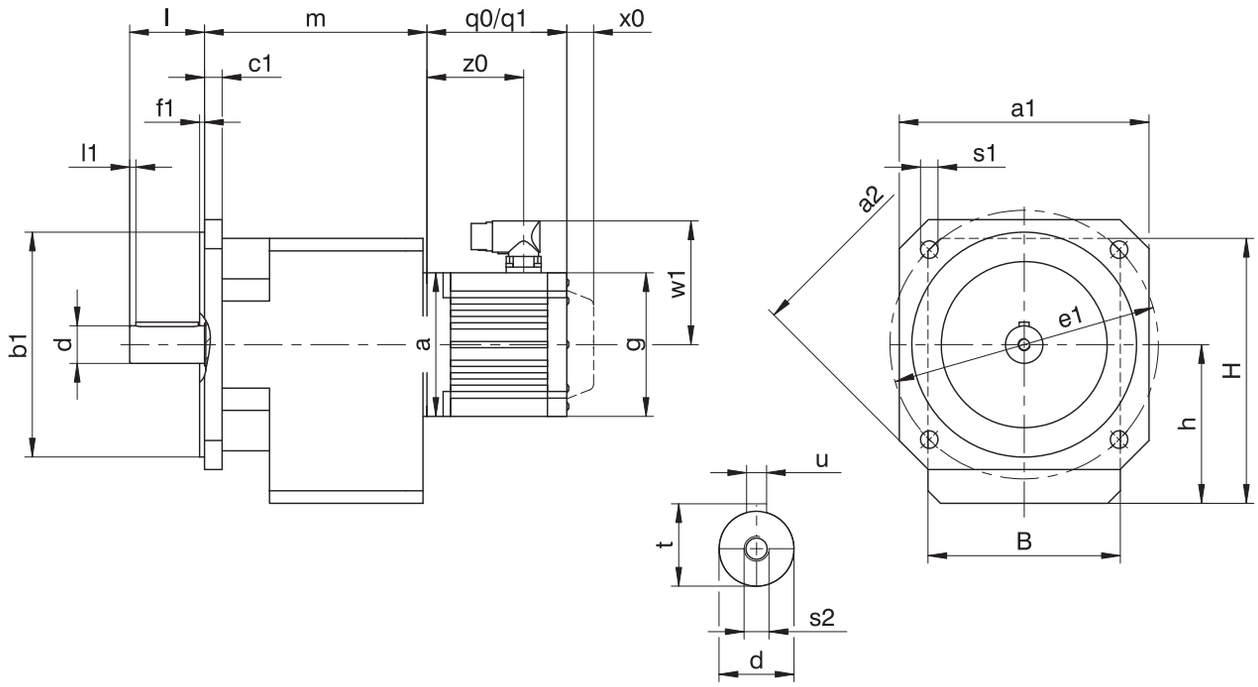

q0	Applies to motors without brake.	q1	Applies to motors with brake.
x0	Applies to encoders using an optical measuring method.	w1	Different for the One Cable Solution (OCS), see the chapter [▸ 17.4]

C203, C303: Motor adapter and gear unit are sometimes non-coaxial.

Options: C0 – C5 also available with solid shaft without feather key; on request starting at C6.

Dimensions of gear units

Type	□a1	□a2	Øb1	B	c1	Ød	Øe1	f1	h	H	l	l1	Øs1	s2	t	u
C0	124	160	110_{j6}	97	9	20_{k6}	130	3.0	79.0	141.0	40	3	9	M6	22.5	A6×6×32
C1	145	192	130_{j6}	130	11	25_{k6}	165	3.5	100.0	175.0	50	5	11	M10	28.0	A8×7×40
C2	145	192	130_{j6}	142	11	30_{k6}	165	3.5	112.0	192.0	60	5	11	M10	33.0	A8×7×50
C3	200	250	180_{j6}	154	14	30_{k6}	215	4.0	127.0	212.0	60	5	14	M10	33.0	A8×7×50
C4	200	250	180_{j6}	178	14	40_{k6}	215	4.0	142.5	242.5	80	5	14	M16	43.0	A12×8×70

Dimensions of motors

Type	□g	q0	q1	w1	x0	z0
EZ301U	72	114.0	154.0	55.5	21	78.5
EZ302U	72	136.0	176.0	55.5	21	100.5
EZ303U	72	158.0	198.0	55.5	21	122.5
EZ401U	98	118.5	167.0	91.0	22	76.5
EZ402U	98	143.5	192.0	91.0	22	101.5
EZ404U	98	193.5	242.0	91.0	22	151.5
EZ501U	115	112.0	166.5	100.0	22	77.5
EZ502U	115	137.0	191.5	100.0	22	102.5
EZ503U	115	162.0	216.5	100.0	22	127.5
EZ505U	115	212.0	266.5	100.0	22	177.5
EZ701U	145	125.0	184.0	115.0	22	87.0
EZ702U	145	150.0	209.0	115.0	22	112.0
EZ703U	145	175.0	234.0	115.0	22	137.0
EZ705U	145	230.0	289.0	134.0	22	188.0
EZ802U	190	232.5	309.5	156.5	22	178.5
EZ803U	190	273.5	350.5	156.5	22	219.5
EZ805U	190	355.5	432.5	156.5	22	301.5

Dimensions of geared motors

Type	EZ3		EZ4		EZ5		EZ7		EZ8	
	a	m	a	m	a	m	a	m	a	m
C002	□72	114	□98	114	□115	118	□145	120	–	–
C102	□72	137	□98	137	□115	141	□145	143	–	–
C103	∅140	174	–	–	–	–	–	–	–	–
C202	∅140	155	∅140	155	□115	159	□145	161	–	–
C203	∅140	192	–	–	–	–	–	–	–	–
C302	–	–	–	–	∅160	178	□145	180	□190	183
C303	∅140	211	∅140	211	–	–	–	–	–	–
C402	–	–	–	–	∅160	206	□145	208	□190	211
C403	–	–	–	–	∅160	249	–	–	–	–

7.3.5 Oil expansion tank

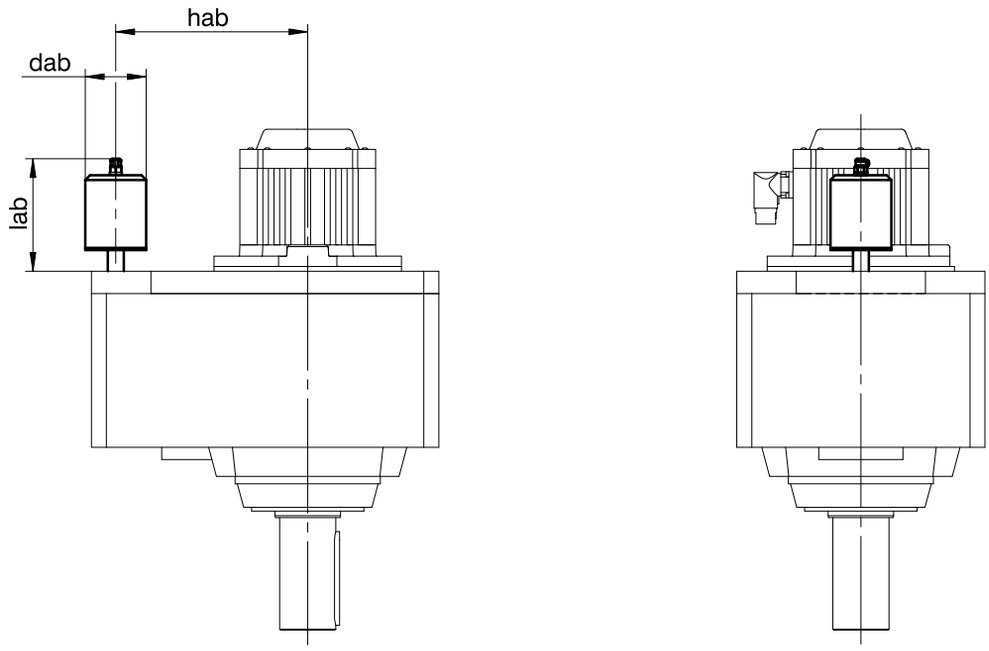

Dimensions

Type	EZ7			EZ8		
	dab	hab	lab	dab	hab	lab
C612	65	170	114.5	65	170	112
C712	73	205	129.5	73	205	129.5

More information can be found in Chapter [▸ 7.6.4]

7.4 Type designation

This chapter shows you an explanation of the type designation with the associated options.

Additional ordering information not included in the type designation can be found at the end of the chapter.

Example code

C	2	0	2	N	0280	EZ401U

Explanation

Code	Designation	Design
C	Type	Helical gear unit
2	Size	2 (example)
0	Generation	Generation 0
1		Generation 1
2	Stages	Two-stage
3		Three-stage
G	Housing	Pitch circle diameter
F		Round flange
Q		Square flange
N		Foot
0280	Transmission ratio (i x 10 rounded)	i = 28.24 (example)
EZ401U	Motor	EZ synchronous servo motor

To complete the type designation, also specify the following in your order:

- For a detailed type designation of the motor, see the chapter [▸ 17]
- For the mounting position, see the chapter [▸ 7.5.5]
- Position of the plug connectors, see the chapter [▸ 7.5.7]
- Oil expansion tank (option, recommended for gear units in mounting position EL5), see the chapter [▸ 7.6.4]

7.4.1 Nameplate

An example gear unit nameplate is explained in the figure below.

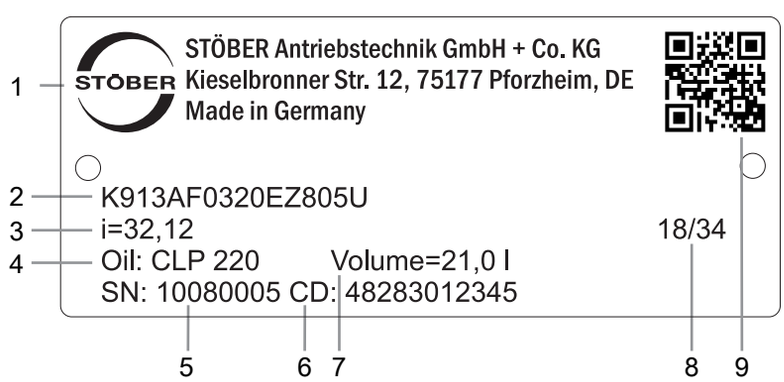

Code	Designation
1	Name of manufacturer
2	Type designation
3	Gear ratio of the gear unit
4	Lubricant specification
5	Serial number of the gear unit
6	Customer-specific data
7	Lubricant fill volume
8	Date of manufacture (year/calendar week)
9	QR code (link to product information)

7.4.1.1 Supporting documents

You can view or download supporting documents for the product by reading off the serial number on the nameplate of the product and entering it at the following address online:
https://id.stober.com

Alternatively, you can use a suitable mobile device to scan in the QR code on the nameplate of the product in order to be linked to the supporting documents.

7.5 Product description

7.5.1 Input options

EZ synchronous servo motor

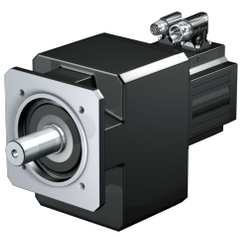

http://www.stoeber.de/en/CEZ

LM Lean motor

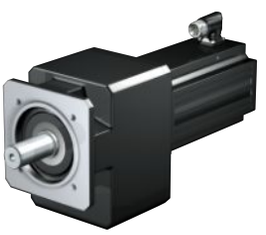

http://www.stoeber.de/en/CLM

Asynchronous motor

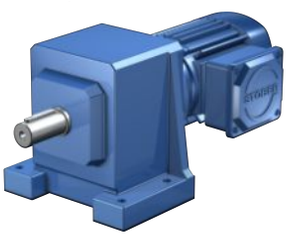

http://www.stoeber.de/en/CIE3D

7.5.2 Housing design

Pitch circle diameter G	Round flange F
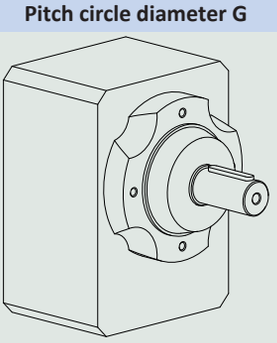	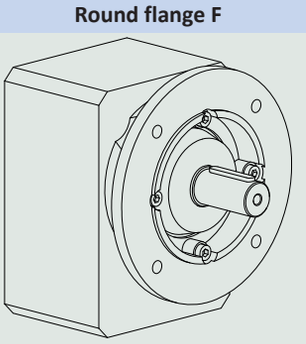

Square flange Q	Foot N
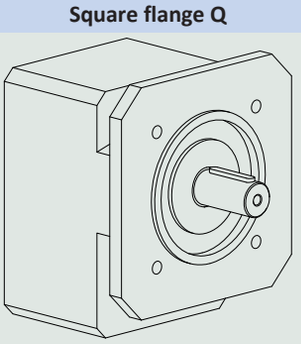	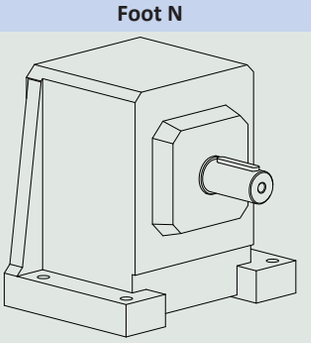

	G	F	Q	N
C0	✓	✓	✓	✓
C1	✓	✓	✓	✓
C2	✓	✓	✓	✓
C3	✓	✓	✓	✓
C4	✓	✓	✓	✓
C5	✓	✓	–	✓
C6	✓	✓	–	✓
C7	✓	✓	–	✓
C8	✓	✓	–	✓
C9	✓	✓	–	✓

7.5.3 Shaft design

Gear units in sizes C0 – C9 come standard with a solid shaft with feather key.

Gear units in sizes C0 – C5 can be ordered with the option of a solid shaft without feather key. Only upon request starting at size C6.

7.5.4 Installation conditions

Fastening the gear units on the machine side using the pitch circle diameter

The specified torques and forces only apply when gear units are fastened on the machine side using screws of strength class 10.9. In addition, the gear housings must be adjusted at the pilot. The machine-side fit must be H7.

7.5.5 Mounting positions

The following table shows the standard mounting positions.

The numbers identify the gear unit sides. The mounting position is defined by the gear side facing downwards.

EL1 IMB3, IMB5, IMB14, IMB34, IMB35	EL2 IMB8	EL3 IMB7
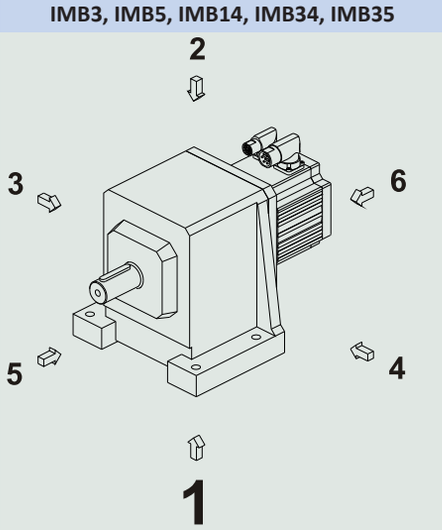	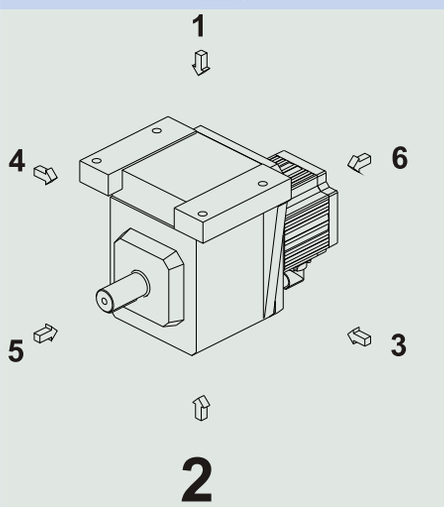	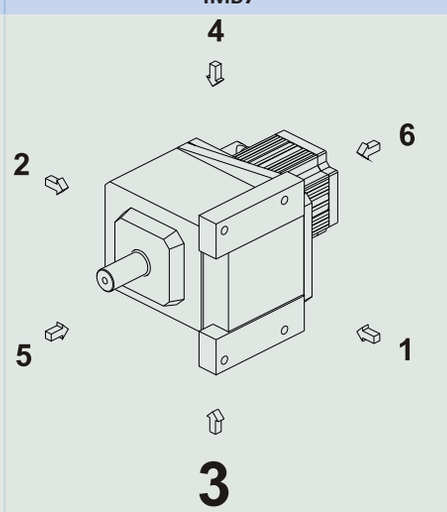
EL4 **IMB6**	**EL5** **IMV1, IMV5, IMV18**	**EL6** **IMV3, IMV6, IMV19**
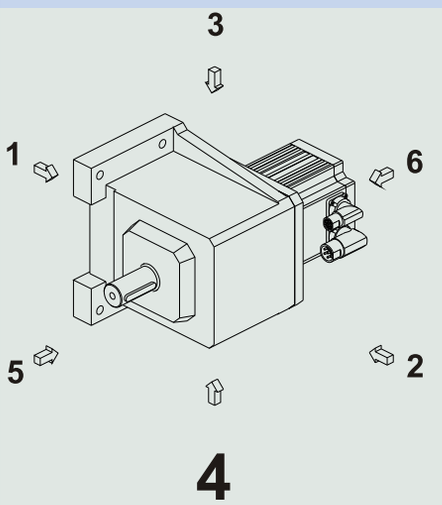	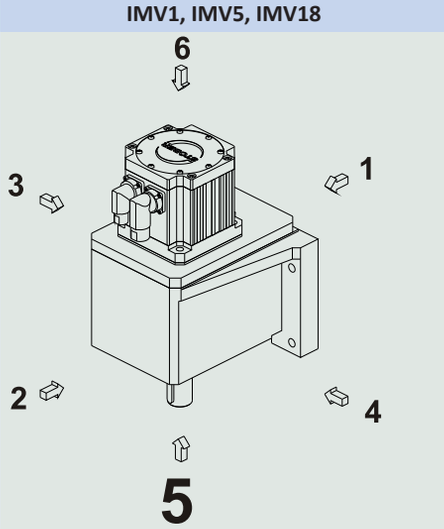	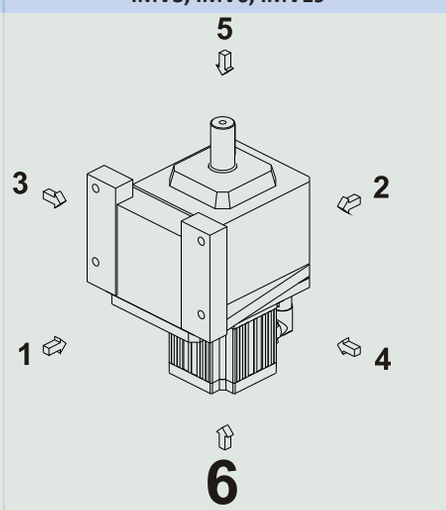

Since the lubricant filling volume of the gear unit depends on the mounting position, the mounting position must be specified when ordering.

7.5.6 Lubricants

STOBER fills the gear units with the amount and type of lubricant specified on the nameplate. The filling volume and the structure of the gear units depend on the mounting position.

Only install the gear units in the intended mounting position! Reposition the gear units only after consulting STOBER. Otherwise, STOBER assumes no liability for the gear units.

You will receive lubricants for use in the food industry upon request.

7.5.7 Position of the plug connectors

Mounting position EL1	Mounting position EL4
Plug connector in 270° position (standard)	Plug connector in 270° position (standard)
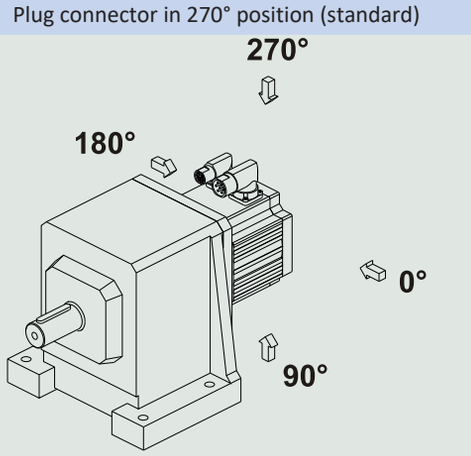	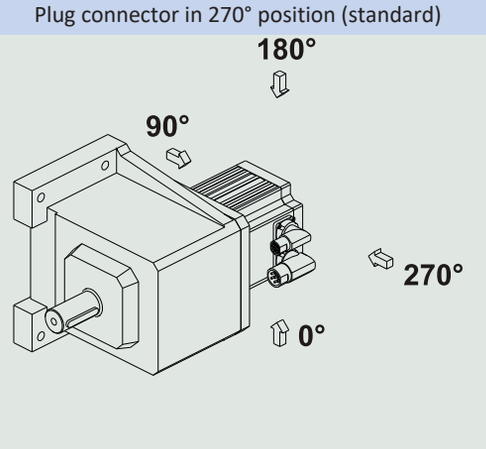

Indicate variations for your geared motor in the order.

Note that the plug connector position rotates along with the geared motor if the geared motor is in another mounting position.

7.5.8 Other product features

Feature	Value
Max. permitted gear unit temperature (on the surface of the gear unit)	≤ 80 °C
Paint	Black RAL 9005
Explosion-proof design in accordance with (ATEX) Directive 2014/34/EU (optional)	Not available
Efficiency:	
η_{get} two-stage	97%
η_{get} three-stage	96%
Protection class:[1]	
Gear unit	IP65
Motor	IP56, optionally IP66

7.5.9 Maintenance

The instructions for maintenance can be found in the operating manual, ID 443027_en, at http://www.stoeber.de/en/downloads/. Enter the ID of the documentation in the Search... field.

Ventilation

Air release valves are fitted as a standard feature and independently of installation position for gear unit sizes C6 to C9.

For the position and dimensions of the air release valve, refer to the 3D model.

Download the 3D model at http://configurator.stoeber.de.

[1] Observe the protection class of all the components.

7.5.10 Direction of rotation

C002 – C912	C103 – C913
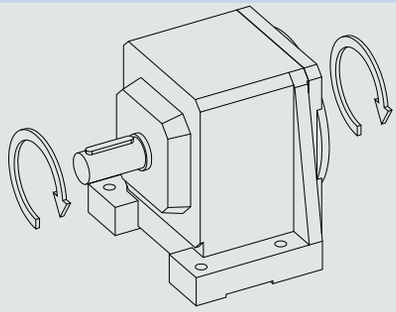	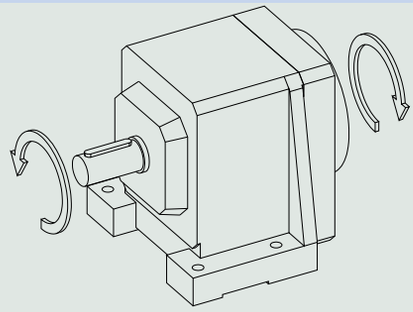
The input and output rotate in the same direction.	The input and output rotate in opposite directions.

The pictures show mounting position EL1.

7.6 Project configuration

Project your drives using our SERVOsoft designing software. Download SERVOsoft for free at https://www.stoeber.de/en/ServoSoft.

Observe the limit conditions in this chapter to ensure a safe design for your drives.

An explanation of the formula symbols can be found in Chapter [▸ 23.1].

The formula symbols for values actually present in the application are marked with *.

7.6.1 Calculation of the operating point

Check the following conditions for operating points other than the nominal point M_{2N} specified in the selection tables.

For mounting positions EL1, EL2, EL3, EL4:

$$n_{1m*} \leq \frac{n_{1maxDBEL1,2,3,4}}{fB_T}$$

For mounting positions EL5, EL6:

$$n_{1m*} \leq \frac{n_{1maxDBEL5,6}}{fB_T}$$

For all mounting positions:

$$n_{1max*} \leq \frac{n_{1max\,ZB}}{fB_T}$$

$$M_{2eff*} \leq M_{2th}$$

$$M_{2acc*} \leq M_{2acc}$$

$$M_{2NOT*} \leq M_{2NOT}$$

$$M_{2eq*} \leq M_{2N} \cdot \frac{S}{fB_{op} \cdot fB_t}$$

Refer to the selection table for the values for $n_{1maxDBEL1,2,3,4}$ and $n_{1maxDBEL5,6}$, n_{1maxZB}, M_{2acc}, M_{2NOT}, M_{2N} and S.

The values for fB_T, fB_{op} and fB_t can be found in the corresponding tables in this chapter.

Calculate the thermal limit torque M_{2th} for a duty cycle > 50%.

Example of cyclic operation

The following calculations are based on a representation of the power taken from the output based in accordance with the following example:

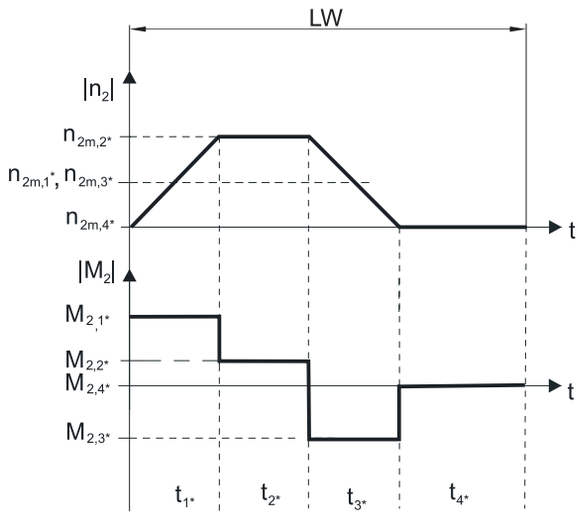

Calculation of the actual average input speed

$$n_{1m*} = n_{2m*} \cdot i$$

$$n_{2m*} = \frac{|n_{2m,1*}| \cdot t_{1*} + \ldots + |n_{2m,n*}| \cdot t_{n*}}{t_{1*} + \ldots + t_{n*}}$$

If $t_{1*} + \ldots + t_{3*} \geq 6$ min, calculate n_{2m*} without the rest phase t_{4*}.

The values for the ratio i can be found in the selection tables.

Calculation of the actual effective torque

$$M_{2eff*} = \sqrt{\frac{t_{1*} \cdot M_{2,1*}^{2} + \ldots + t_{n*} \cdot M_{2,n*}^{2}}{t_{1*} + \ldots + t_{n*}}}$$

Calculation of the actual equivalent torque

$$M_{2eq*} = \sqrt[3]{\frac{|n_{2m,1*}| \cdot t_{1*} \cdot |M_{2,1*}^{3}| + \ldots + |n_{2m,n*}| \cdot t_{n*} \cdot |M_{2,n*}^{3}|}{|n_{2m,1*}| \cdot t_{1*} + \ldots + |n_{2m,n*}| \cdot t_{n*}}}$$

Calculation of the thermal limit torque

Calculate the thermal limit torque M_{2th} for a duty cycle $ED_{10} > 50\%$ and the actual average input speed n_{1m*}. (At $K_{mot,th} \leq 0$ you must reduce the average input speed n_{1m*} accordingly or select another geared motor size.)

$$M_{2th} = M_{op} \cdot i \cdot K_{mot,th}$$

$$K_{mot,th} = 0{,}95 - \frac{a_{th}}{1000} \cdot athEL \cdot fB_T \cdot \left(\frac{n_{1m*}}{1000}\right)^3$$

The values for i and a_{th} can be found in the selection tables.

The values for a_{thEL} and fB_T can be found in the corresponding tables in this chapter.

The value for the torque of the motor at operating point M_{op} with the determined average input speed n_{1m*} can be found in the motor curve of Chapter [▶ 17.3]. Note the size, nominal speed n_N and cooling type of the motor. The figure below shows an example of reading the torque M_{op} of a motor with convection cooling at the operating point.

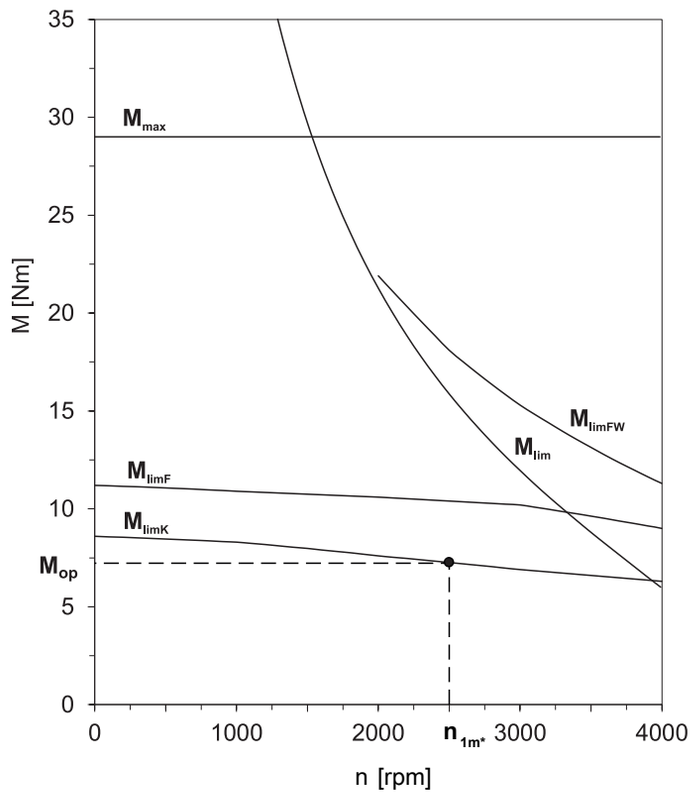

Operating factors

Parameter a_{thEL}

Mounting position	a_{thEL}
EL1, 2, 5, 6	1.0
EL3, 4	1.1

Operating mode	fB_{op}
Uniform continuous operation	1.00
Cyclic operation	1.25
Reversing load cyclic operation	1.40

Run time	fB_t
Daily runtime ≤ 8 h	1.00
Daily runtime ≤ 16 h	1.15
Daily runtime ≤ 24 h	1.20

Temperature		fB_T
Motor cooling	**Surrounding temperature**	
Motor with forced ventilation	≤ 20 °C	0.9
	≤ 30 °C	1.0
	≤ 40 °C	1.15
Motor with convection cooling	≤ 20 °C	1.0
	≤ 30 °C	1.1
	≤ 40 °C	1.25

Notes

- The maximum permitted gear unit temperature (see the "Other product features" chapter) must not be exceeded. Doing so may result in damage to the geared motor.
- For braking from full speed (for example when the power fails or when setting up the machine), note the permitted gear unit torques (M_{2acc}, M_{2NOT}) in the selection tables.

7.6.2 Permitted shaft loads for the output shaft

The values specified in the tables apply to the permitted shaft loads:

- For shaft dimensions in accordance with the catalog
- For output speeds $n_{2m*} \leq 20$ rpm ($F_{2axN} = F_{2ax20}$; $F_{2radN} = F_{2rad20}$; $M_{2kN} = M_{2k20}$)
- Only if radial forces on the gear unit are stabilized by its pilots for the pitch circle diameter and flange housing design

Permitted shaft loads

Type	z_2 [mm]	F_{2ax20} [N]	F_{2rad20} [N]	$F_{2rad,acc}$ [N]	M_{2k20} [Nm]	$M_{2k,acc}$ [Nm]
C0	20.0	500	1900	1900	80	80
C1	30.0	850	3400	3400	190	190
C2	30.0	1050	4200	4200	260	260
C3	30.0	1400	5650	5650	350	350
C4	35.0	2400	9700	9700	750	750
C5	42.0	3000	11000	11000	900	900
C6	40.0	4000	16000	16000	1500	1500
C7	45.0	5500	22000	22000	2400	2400
C8	50.0	7500	30000	30000	3700	3700
C9	55.0	9500	37000	37000	5200	5200

For other output speeds, download diagrams at http://configurator.stoeber.de.

The following applies to output speeds n_{2m*} > 20 rpm:

$$F_{2axN} = \frac{F_{2ax20}}{\sqrt[3]{\frac{n_{2m*}}{20\ \text{rpm}}}} \qquad F_{2radN} = \frac{F_{2rad20}}{\sqrt[3]{\frac{n_{2m*}}{20\ \text{rpm}}}} \qquad M_{2kN} = \frac{M_{2k20}}{\sqrt[3]{\frac{n_{2m*}}{20\ \text{rpm}}}}$$

The values for F_{2ax20}, F_{2rad20} and M_{2k20} can be found in the table "Permitted shaft loads" in this chapter.

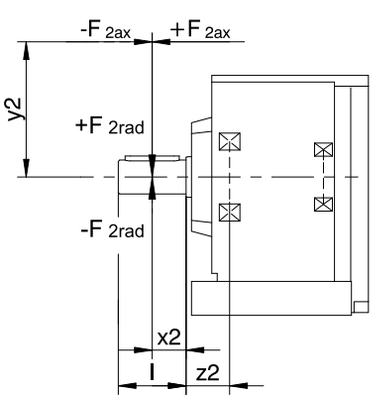

Fig. 1: Force application points

The specified values for F_{2rad20} are based on application of force at the middle of the output shaft: $x_2 = l/2$.

Shaft dimensions can be found in the "Dimensional drawings" chapter.

The following applies to other force application points:

$$M_{2k*} = \frac{2 \cdot F_{2ax*} \cdot y_2 + F_{2rad*} \cdot (x_2 + z_2)}{1000} \leq M_{2kN}$$

$$F_{2rad*} \leq F_{2radN}$$

$$F_{2ax*} \leq F_{2axN}$$

For applications with multiple axial and/or radial forces, you must add the forces as vectors.

In the event of EMERGENCY OFF operation (max. 1000 load changes), you can multiply the permitted forces and torques for F_{2ax20}, F_{2rad20} and M_{2k20} by a factor of two.

7.6.3 Radial shaft seal rings

Leak-proofness

Our gear units are equipped with high-quality radial shaft seal rings and checked for leaks. However, a leak cannot be fully ruled out over the length of use of a gear unit. If you use a gear unit with goods incompatible with the lubricant, you must take measures to prevent direct contact with the gear unit lubricant in case of a leak.

7.6.4 Oil expansion tank

The gear units have a higher fill level in mounting position EL5. The oil expansion tank prevents oil from escaping out of the gear unit.

Notes

- We recommend using an oil expansion tank in mounting position EL5 (additional cost) for fast running gear units with an input speed n_1 > 1750 rpm and gear ratios i < 20.
- It is not possible to use an oil expansion tank if the plug connector is at 90°!
- The oil expansion tank can only be used with certain sizes; see the chapter [▸ 7.3.5]

7.7 Additional documentation

Additional documentation related to the product can be found at
http://www.stoeber.de/en/downloads/

Enter the ID of the documentation in the Search... field.

Documentation	ID
Operating manual for C/F/K/S gear units and gear motors	443027_en

8 F offset helical geared motors

Table of contents

8.1 Overview ... 170

8.2 Selection tables ... 171

8.3 Dimensional drawings ... 181

8.3.1 A shaft design (hollow shaft), G housing design (pitch circle diameter) ... 182

8.3.2 A shaft design (hollow shaft), GN housing design (pitch circle diameter + side fastening) ... 184

8.3.3 A shaft design (hollow shaft), F housing design (round flange) ... 186

8.3.4 A shaft design (hollow shaft), Q housing design (square flange) ... 188

8.3.5 V shaft design (solid shaft), F housing design (round flange) ... 190

8.3.6 V shaft design (solid shaft), Q housing design (square flange) ... 192

8.3.7 S shaft design (hollow shaft with shrink disk), G housing design (pitch circle diameter) ... 194

8.3.8 S shaft design (hollow shaft with shrink disk), GN housing design (pitch circle diameter + side fastening) ... 196

8.3.9 S shaft design (hollow shaft with shrink disk), F housing design (round flange) ... 198

8.3.10 S shaft design (hollow shaft with shrink disk), Q housing design (square flange) ... 200

8.4 Type designation ... 202

8.4.1 Nameplate ... 202

8.5 Product description ... 203

8.5.1 Input options ... 203

8.5.2 Housing design ... 203

8.5.3 Combinatorial shaft/housing design ... 204

8.5.4 Installation conditions ... 204

8.5.5 Mounting positions ... 204

8.5.6 Lubricants ... 205

8.5.7 Position of the plug connectors ... 205

8.5.8 Other product features ... 206

8.5.9 Direction of rotation ... 206

8.6 Project configuration ... 206

8.6.1 Calculation of the operating point ... 206

8.6.2 Permitted shaft loads for the output shaft ... 209

8.6.3 Radial shaft seal rings ... 211

8.7 Additional documentation ... 211

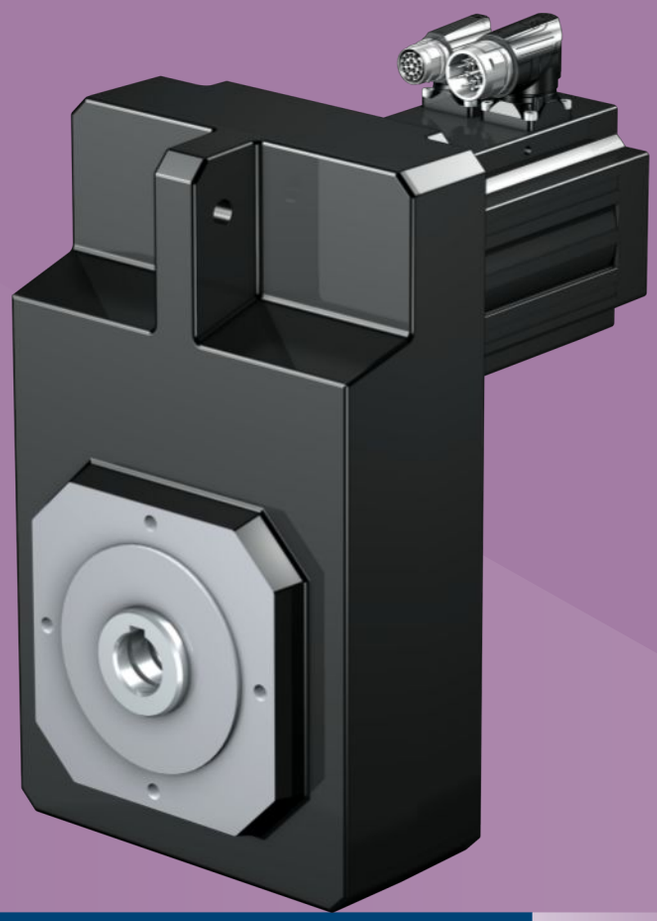

8 Offset helical geared motors F

8.1 Overview

Offset helical geared motors with large axial distances

Features

Power density	★☆☆☆☆
Backlash	★★★☆☆
Price category	€
Shaft load	★★★☆☆
Smooth operation	★★★☆☆
Torsional stiffness	★★☆☆☆
Mass moment of inertia	★★★★★
Helical gearing	✓
Maintenance-free	✓
FKM seal ring at the input	✓
Large axial distances, suitable for confined situations	✓
Compact and highly dynamic due to direct motor attachment	✓

Key ★☆☆☆☆ good | ★★★★★ excellent
€ Economy | €€€€€ Premium

Technical data

i	4.3 – 274
M_{2acc}	21 – 1100 Nm
$\Delta\phi_2$	5 – 11 arcmin
η_{get}	96 – 97 %

8.2 Selection tables

The technical data specified in the selection tables applies to:

- Installation altitudes up to 1000 m above sea level
- Surrounding temperatures from 0 °C to 40 °C
- Drives with convection-cooled motors (e.g. EZ401**U**)
- Weight specification for mounting position EL1, housing design G

For the technical data on drives with forced ventilated motors (e.g. EZ401**B**), refer to http://configurator.stoeber.de.

An explanation of the formula symbols can be found in Chapter [▸ 23.1].

n_{2N} [rpm]	M_{2N} [Nm]	$M_{2,0}$ [Nm]	a_{th}	S	Type	M_{2acc} [Nm]	M_{2NOT} [Nm]	i	i_{exakt}	n_{1maxDB} EL1,2,3,4 [rpm]	n_{1maxDB} EL5,6 [rpm]	n_{1maxZB} [rpm]	J_1 [kgcm²]	$\Delta\varphi_2$ [arcmin]	$\Delta\varphi_{2redII}$ [arcmin]	C_2 [Nm/arcmin]	m [kg]
F1 (n_{1N} = 3000 rpm, $M_{2acc,max}$ = 120 Nm)																	
32	84	86	1.5	1.4	F102_0940 EZ301U	120	240	93.63	7865/84	4000	4000	7000	0.22	11	6.0	7.7	13
43	63	65	1.3	1.9	F102_0700 EZ301U	120	240	70.06	1261/18	4000	4000	7000	0.23	11	6.0	7.7	13
54	50	52	1.1	2.4	F102_0560 EZ301U	120	240	55.97	2015/36	4000	4000	7000	0.25	11	6.0	7.7	13
54	86	91	1.9	1.4	F102_0560 EZ302U	120	240	55.97	2015/36	4000	4000	7000	0.35	11	6.0	7.7	13
65	42	43	1.0	2.9	F102_0460 EZ301U	120	240	46.43	325/7	4000	4000	7000	0.28	11	6.0	7.7	13
65	72	76	1.8	1.7	F102_0460 EZ302U	120	240	46.43	325/7	4000	4000	7000	0.38	11	6.0	7.7	13
86	32	32	1.0	3.5	F102_0350 EZ301U	95	240	35.05	3575/102	4000	4000	6500	0.32	11	6.0	7.7	13
86	54	57	1.7	2.0	F102_0350 EZ302U	120	240	35.05	3575/102	4000	4000	6500	0.42	11	6.0	7.7	13
86	70	74	2.2	1.6	F102_0350 EZ303U	120	240	35.05	3575/102	4000	4000	6500	0.53	11	6.0	7.7	14
107	25	26	0.9	4.0	F102_0280 EZ301U	77	200	28.17	169/6	4000	4000	6500	0.37	11	6.0	7.7	13
107	43	46	1.6	2.3	F102_0280 EZ302U	120	200	28.17	169/6	4000	4000	6500	0.47	11	6.0	7.7	13
107	57	60	2.1	1.8	F102_0280 EZ303U	120	200	28.17	169/6	4000	4000	6500	0.58	11	6.0	7.7	14
107	77	82	2.8	1.3	F102_0280 EZ401U	120	240	28.17	169/6	4000	4000	6500	1.1	11	6.0	7.7	15
130	21	21	0.9	4.6	F102_0230 EZ301U	63	170	23.08	3185/138	3700	3700	6000	0.43	11	6.0	7.7	13
130	36	38	1.6	2.7	F102_0230 EZ302U	110	170	23.08	3185/138	3700	3700	6000	0.53	11	6.0	7.7	13
130	46	49	2.0	2.1	F102_0230 EZ303U	120	170	23.08	3185/138	3700	3700	6000	0.64	11	6.0	7.7	14
130	63	67	2.7	1.5	F102_0230 EZ401U	120	240	23.08	3185/138	3700	3700	6000	1.2	11	6.0	7.7	15
163	28	30	1.5	3.1	F102_0185 EZ302U	90	130	18.46	1495/81	3700	3700	6000	0.62	11	6.0	7.7	13
163	37	39	2.0	2.4	F102_0185 EZ303U	110	130	18.46	1495/81	3700	3700	6000	0.73	11	6.0	7.7	14
163	50	54	2.6	1.8	F102_0185 EZ401U	120	240	18.46	1495/81	3700	3700	6000	1.3	11	6.0	7.7	15
163	77	84	4.1	1.1	F102_0185 EZ501U	120	240	18.46	1495/81	3700	3700	6000	3.2	11	6.0	7.7	16
221	21	22	1.4	3.8	F102_0135 EZ302U	66	99	13.59	231/17	4000	4000	6500	0.51	11	8.0	6.5	13
221	27	29	1.9	2.9	F102_0135 EZ303U	79	99	13.59	231/17	4000	4000	6500	0.62	11	8.0	6.5	14
221	37	40	2.5	2.2	F102_0135 EZ401U	110	200	13.59	231/17	4000	4000	6500	1.1	11	8.0	6.5	15
221	57	62	3.9	1.4	F102_0135 EZ501U	110	200	13.59	231/17	4000	4000	6500	3.1	11	8.0	6.5	16
221	62	69	4.2	1.3	F102_0135 EZ402U	110	200	13.59	231/17	4000	4000	6500	1.8	11	8.0	6.5	16
275	17	18	1.6	3.8	F102_0110 EZ302U	53	79	10.92	273/25	4000	4000	6500	0.60	11	8.0	6.5	13
275	22	23	2.1	2.9	F102_0110 EZ303U	64	79	10.92	273/25	4000	4000	6500	0.71	11	8.0	6.5	14
275	30	32	2.4	2.5	F102_0110 EZ401U	90	200	10.92	273/25	4000	4000	6500	1.2	11	8.0	6.5	15
275	46	50	3.7	1.6	F102_0110 EZ501U	110	200	10.92	273/25	4000	4000	6500	3.2	11	8.0	6.5	16
275	50	55	4.1	1.5	F102_0110 EZ402U	110	200	10.92	273/25	4000	4000	6500	1.9	11	8.0	6.5	16
335	14	15	1.8	3.8	F102_0089 EZ302U	43	65	8.948	1029/115	3700	3700	6000	0.73	11	8.0	6.5	13
335	18	19	2.3	2.9	F102_0089 EZ303U	52	65	8.948	1029/115	3700	3700	6000	0.84	11	8.0	6.5	14
335	24	26	2.3	2.9	F102_0089 EZ401U	74	200	8.948	1029/115	3700	3700	6000	1.4	11	8.0	6.5	15
335	37	41	3.6	1.9	F102_0089 EZ501U	110	200	8.948	1029/115	3700	3700	6000	3.3	11	8.0	6.5	16
335	41	45	3.9	1.7	F102_0089 EZ402U	110	200	8.948	1029/115	3700	3700	6000	2.1	11	8.0	6.5	16
335	60	75	5.8	1.2	F102_0089 EZ404U	110	200	8.948	1029/115	3700	3700	6000	3.4	11	8.0	6.5	18
335	64	69	6.2	1.1	F102_0089 EZ502U	110	200	8.948	1029/115	3700	3700	6000	5.6	11	8.0	6.5	18
335	64	72	6.2	1.1	F102_0089 EZ701U	110	200	8.948	1029/115	3700	3700	6000	8.9	11	8.0	6.5	20
419	11	12	2.0	3.8	F102_0072 EZ302U	35	52	7.156	322/45	3700	3700	6000	0.92	11	8.0	6.5	13
419	14	15	2.6	2.9	F102_0072 EZ303U	42	52	7.156	322/45	3700	3700	6000	1.0	11	8.0	6.5	14
419	19	21	2.3	3.3	F102_0072 EZ401U	59	200	7.156	322/45	3700	3700	6000	1.6	11	8.0	6.5	15
419	30	33	3.5	2.2	F102_0072 EZ501U	110	200	7.156	322/45	3700	3700	6000	3.5	11	8.0	6.5	16
419	33	36	3.8	2.0	F102_0072 EZ402U	110	200	7.156	322/45	3700	3700	6000	2.3	11	8.0	6.5	16
419	48	60	5.6	1.3	F102_0072 EZ404U	110	200	7.156	322/45	3700	3700	6000	3.6	11	8.0	6.5	18
419	51	56	6.0	1.3	F102_0072 EZ502U	110	200	7.156	322/45	3700	3700	6000	5.8	11	8.0	6.5	18
419	51	58	6.0	1.3	F102_0072 EZ701U	110	200	7.156	322/45	3700	3700	6000	9.1	11	8.0	6.5	20
464	18	19	2.2	3.6	F102_0065 EZ401U	53	190	6.462	84/13	3500	3500	6000	1.7	11	8.0	6.5	15
464	27	29	3.4	2.3	F102_0065 EZ501U	100	190	6.462	84/13	3500	3500	6000	3.7	11	8.0	6.5	16
464	29	33	3.7	2.1	F102_0065 EZ402U	100	190	6.462	84/13	3500	3500	6000	2.4	11	8.0	6.5	16
464	43	54	5.5	1.4	F102_0065 EZ404U	110	190	6.462	84/13	3500	3500	6000	3.7	11	8.0	6.5	18

n_{2N} [rpm]	M_{2N} [Nm]	$M_{2,0}$ [Nm]	a_{th}	S	Type	M_{2acc} [Nm]	M_{2NOT} [Nm]	i	i_{exakt}	n_{1maxDB} EL1,2,3,4 [rpm]	n_{1maxDB} EL5,6 [rpm]	n_{1maxZB} [rpm]	J_1 [kgcm²]	$\Delta\varphi_2$ [arcmin]	$\Delta\varphi_{2redII}$ [arcmin]	C_2 [Nm/ arcmin]	m [kg]
F1 (n_{1N} = 3000 rpm, $M_{2acc,max}$ = 120 Nm)																	
464	46	50	5.9	1.3	F102_0065 EZ502U	110	190	6.462	84/13	3500	3500	6000	6.0	11	8.0	6.5	18
464	46	52	5.9	1.3	F102_0065 EZ701U	110	190	6.462	84/13	3500	3500	6000	9.3	11	8.0	6.5	20
464	61	70	7.7	1.0	F102_0065 EZ503U	110	190	6.462	84/13	3500	3500	6000	8.3	11	8.0	6.5	19
696	6.6	7.0	2.6	3.8	F102_0043 EZ302U	21	31	4.308	56/13	3500	3500	6000	1.8	11	8.0	6.5	13
696	8.7	9.2	3.3	2.9	F102_0043 EZ303U	25	31	4.308	56/13	3500	3500	6000	1.9	11	8.0	6.5	14
696	12	13	2.1	4.7	F102_0043 EZ401U	36	130	4.308	56/13	3500	3500	6000	2.4	11	8.0	6.5	15
696	18	20	3.2	3.0	F102_0043 EZ501U	67	130	4.308	56/13	3500	3500	6000	4.4	11	8.0	6.5	16
696	20	22	3.5	2.8	F102_0043 EZ402U	67	130	4.308	56/13	3500	3500	6000	3.1	11	8.0	6.5	16
696	29	36	5.1	1.9	F102_0043 EZ404U	100	130	4.308	56/13	3500	3500	6000	4.5	11	8.0	6.5	18
696	31	33	5.5	1.8	F102_0043 EZ502U	100	130	4.308	56/13	3500	3500	6000	6.7	11	8.0	6.5	18
696	31	35	5.5	1.8	F102_0043 EZ701U	84	130	4.308	56/13	3500	3500	6000	10	11	8.0	6.5	20
696	41	46	7.2	1.3	F102_0043 EZ503U	100	130	4.308	56/13	3500	3500	6000	9.1	11	8.0	6.5	19
F1 (n_{1N} = 6000 rpm, $M_{2acc,max}$ = 120 Nm)																	
64	81	86	1.4	1.5	F102_0940 EZ301U	120	240	93.63	7865/84	4000	4000	7000	0.22	11	6.0	7.7	13
86	60	65	1.3	1.8	F102_0700 EZ301U	120	240	70.06	1261/18	4000	4000	7000	0.23	11	6.0	7.7	13
107	48	52	1.3	2.1	F102_0560 EZ301U	120	240	55.97	2015/36	4000	4000	7000	0.25	11	6.0	7.7	13
107	81	91	2.1	1.2	F102_0560 EZ302U	120	240	55.97	2015/36	4000	4000	7000	0.35	11	6.0	7.7	13
129	40	43	1.2	2.4	F102_0460 EZ301U	120	240	46.43	325/7	4000	4000	7000	0.28	11	6.0	7.7	13
129	68	76	2.1	1.4	F102_0460 EZ302U	120	240	46.43	325/7	4000	4000	7000	0.38	11	6.0	7.7	13
171	30	32	1.2	2.9	F102_0350 EZ301U	95	240	35.05	3575/102	4000	4000	6500	0.32	11	6.0	7.7	13
171	51	57	2.0	1.7	F102_0350 EZ302U	120	240	35.05	3575/102	4000	4000	6500	0.42	11	6.0	7.7	13
171	67	76	2.6	1.3	F102_0350 EZ303U	120	240	35.05	3575/102	4000	4000	6500	0.53	11	6.0	7.7	14
213	24	26	1.1	3.3	F102_0280 EZ301U	77	200	28.17	169/6	4000	4000	6500	0.37	11	6.0	7.7	13
213	41	46	1.9	2.0	F102_0280 EZ302U	120	200	28.17	169/6	4000	4000	6500	0.47	11	6.0	7.7	13
213	54	61	2.5	1.5	F102_0280 EZ303U	120	200	28.17	169/6	4000	4000	6500	0.58	11	6.0	7.7	14
213	63	77	2.9	1.3	F102_0280 EZ401U	120	240	28.17	169/6	4000	4000	6500	1.1	11	6.0	7.7	15
260	20	21	1.1	3.8	F102_0230 EZ301U	63	170	23.08	3185/138	3700	3700	6000	0.43	11	6.0	7.7	13
260	34	38	1.8	2.3	F102_0230 EZ302U	110	170	23.08	3185/138	3700	3700	6000	0.53	11	6.0	7.7	13
260	44	50	2.4	1.7	F102_0230 EZ303U	120	170	23.08	3185/138	3700	3700	6000	0.64	11	6.0	7.7	14
260	51	63	2.8	1.5	F102_0230 EZ401U	120	240	23.08	3185/138	3700	3700	6000	1.2	11	6.0	7.7	15
325	16	17	1.1	4.4	F102_0185 EZ301U	50	130	18.46	1495/81	3700	3700	6000	0.52	11	6.0	7.7	13
325	27	30	1.8	2.6	F102_0185 EZ302U	90	130	18.46	1495/81	3700	3700	6000	0.62	11	6.0	7.7	13
325	35	40	2.3	2.0	F102_0185 EZ303U	110	130	18.46	1495/81	3700	3700	6000	0.73	11	6.0	7.7	14
325	41	50	2.7	1.7	F102_0185 EZ401U	120	240	18.46	1495/81	3700	3700	6000	1.3	11	6.0	7.7	15
325	61	79	4.0	1.2	F102_0185 EZ501U	120	240	18.46	1495/81	3700	3700	6000	3.2	11	6.0	7.7	16
325	63	88	4.2	1.1	F102_0185 EZ402U	120	240	18.46	1495/81	3700	3700	6000	2.0	11	6.0	7.7	16
442	20	22	1.7	3.2	F102_0135 EZ302U	66	99	13.59	231/17	4000	4000	6500	0.51	11	8.0	6.5	13
442	26	30	2.2	2.5	F102_0135 EZ303U	79	99	13.59	231/17	4000	4000	6500	0.62	11	8.0	6.5	14
442	30	37	2.6	2.1	F102_0135 EZ401U	110	200	13.59	231/17	4000	4000	6500	1.1	11	8.0	6.5	15
442	45	58	3.8	1.4	F102_0135 EZ501U	110	200	13.59	231/17	4000	4000	6500	3.1	11	8.0	6.5	16
442	46	65	4.0	1.4	F102_0135 EZ402U	110	200	13.59	231/17	4000	4000	6500	1.8	11	8.0	6.5	16
549	16	18	1.6	3.7	F102_0110 EZ302U	53	79	10.92	273/25	4000	4000	6500	0.60	11	8.0	6.5	13
549	21	24	2.1	2.8	F102_0110 EZ303U	64	79	10.92	273/25	4000	4000	6500	0.71	11	8.0	6.5	14
549	24	30	2.5	2.4	F102_0110 EZ401U	90	200	10.92	273/25	4000	4000	6500	1.2	11	8.0	6.5	15
549	36	47	3.7	1.6	F102_0110 EZ501U	110	200	10.92	273/25	4000	4000	6500	3.2	11	8.0	6.5	16
549	37	52	3.8	1.6	F102_0110 EZ402U	110	200	10.92	273/25	4000	4000	6500	1.9	11	8.0	6.5	16
671	13	15	1.7	4.0	F102_0089 EZ302U	43	65	8.948	1029/115	3700	3700	6000	0.73	11	8.0	6.5	13
671	17	20	2.2	3.1	F102_0089 EZ303U	52	65	8.948	1029/115	3700	3700	6000	0.84	11	8.0	6.5	14
671	20	24	2.4	2.8	F102_0089 EZ401U	74	200	8.948	1029/115	3700	3700	6000	1.4	11	8.0	6.5	15
671	30	38	3.6	1.9	F102_0089 EZ501U	110	200	8.948	1029/115	3700	3700	6000	3.3	11	8.0	6.5	16
671	30	43	3.7	1.8	F102_0089 EZ402U	110	200	8.948	1029/115	3700	3700	6000	2.1	11	8.0	6.5	16
671	45	68	5.5	1.2	F102_0089 EZ502U	110	200	8.948	1029/115	3700	3700	6000	5.6	11	8.0	6.5	18
671	45	69	5.5	1.2	F102_0089 EZ701U	110	200	8.948	1029/115	3700	3700	6000	8.9	11	8.0	6.5	20
671	50	73	6.1	1.1	F102_0089 EZ404U	110	200	8.948	1029/115	3700	3700	6000	3.4	11	8.0	6.5	18
838	10	12	1.9	4.0	F102_0072 EZ302U	35	52	7.156	322/45	3700	3700	6000	0.92	11	8.0	6.5	13
838	14	16	2.4	3.1	F102_0072 EZ303U	42	52	7.156	322/45	3700	3700	6000	1.0	11	8.0	6.5	14
838	16	19	2.3	3.2	F102_0072 EZ401U	59	200	7.156	322/45	3700	3700	6000	1.6	11	8.0	6.5	15
838	24	31	3.4	2.2	F102_0072 EZ501U	110	200	7.156	322/45	3700	3700	6000	3.5	11	8.0	6.5	16
838	24	34	3.6	2.1	F102_0072 EZ402U	110	200	7.156	322/45	3700	3700	6000	2.3	11	8.0	6.5	16
838	36	54	5.3	1.4	F102_0072 EZ502U	110	200	7.156	322/45	3700	3700	6000	5.8	11	8.0	6.5	18
838	36	55	5.3	1.4	F102_0072 EZ701U	110	200	7.156	322/45	3700	3700	6000	9.1	11	8.0	6.5	20
838	40	58	5.9	1.3	F102_0072 EZ404U	110	200	7.156	322/45	3700	3700	6000	3.6	11	8.0	6.5	18
838	43	74	6.3	1.2	F102_0072 EZ503U	110	200	7.156	322/45	3700	3700	6000	8.2	11	8.0	6.5	19
929	14	18	2.3	3.4	F102_0065 EZ401U	53	190	6.462	84/13	3500	3500	6000	1.7	11	8.0	6.5	15

n_{2N} [rpm]	M_{2N} [Nm]	$M_{2,0}$ [Nm]	a_{th}	S	Type	M_{2acc} [Nm]	M_{2NOT} [Nm]	i	i_{exakt}	n_{1maxDB} EL1,2,3,4 [rpm]	n_{1maxDB} EL5,6 [rpm]	n_{1maxZB} [rpm]	J_1 [kgcm²]	$\Delta\varphi_2$ [arcmin]	$\Delta\varphi_{2redII}$ [arcmin]	C_2 [Nm/ arcmin]	m [kg]
F1 (n_{1N} = 6000 rpm, $M_{2acc,max}$ = 120 Nm)																	
929	21	28	3.4	2.3	F102_0065 EZ501U	100	190	6.462	84/13	3500	3500	6000	3.7	11	8.0	6.5	16
929	22	31	3.5	2.3	F102_0065 EZ402U	100	190	6.462	84/13	3500	3500	6000	2.4	11	8.0	6.5	16
929	33	49	5.2	1.5	F102_0065 EZ502U	110	190	6.462	84/13	3500	3500	6000	6.0	11	8.0	6.5	18
929	33	50	5.2	1.5	F102_0065 EZ701U	110	190	6.462	84/13	3500	3500	6000	9.3	11	8.0	6.5	20
929	36	53	5.8	1.4	F102_0065 EZ404U	110	190	6.462	84/13	3500	3500	6000	3.7	11	8.0	6.5	18
929	39	66	6.2	1.3	F102_0065 EZ503U	110	190	6.462	84/13	3500	3500	6000	8.3	11	8.0	6.5	19
1393	6.3	7.0	2.4	4.0	F102_0043 EZ302U	21	31	4.308	56/13	3500	3500	6000	1.8	11	8.0	6.5	13
1393	8.2	9.4	3.1	3.1	F102_0043 EZ303U	25	31	4.308	56/13	3500	3500	6000	1.9	11	8.0	6.5	14
1393	9.6	12	2.1	4.5	F102_0043 EZ401U	36	130	4.308	56/13	3500	3500	6000	2.4	11	8.0	6.5	15
1393	14	18	3.2	3.0	F102_0043 EZ501U	67	130	4.308	56/13	3500	3500	6000	4.4	11	8.0	6.5	16
1393	15	20	3.3	3.0	F102_0043 EZ402U	67	130	4.308	56/13	3500	3500	6000	3.1	11	8.0	6.5	16
1393	22	33	4.8	2.0	F102_0043 EZ502U	100	130	4.308	56/13	3500	3500	6000	6.7	11	8.0	6.5	18
1393	22	33	4.8	2.0	F102_0043 EZ701U	84	130	4.308	56/13	3500	3500	6000	10	11	8.0	6.5	20
1393	24	35	5.4	1.8	F102_0043 EZ404U	100	130	4.308	56/13	3500	3500	6000	4.5	11	8.0	6.5	18
1393	26	44	5.8	1.7	F102_0043 EZ503U	100	130	4.308	56/13	3500	3500	6000	9.1	11	8.0	6.5	19
F2 (n_{1N} = 3000 rpm, $M_{2acc,max}$ = 270 Nm)																	
14	198	202	1.2	1.2	F203_2220 EZ301U	270	480	222.2	2444/11	4000	4000	6500	0.25	11	7.0	18	24
16	164	167	1.1	1.5	F203_1840 EZ301U	270	480	184.3	16215/88	4000	4000	6500	0.25	11	7.0	18	24
21	127	130	1.0	1.9	F202_1410 EZ301U	270	480	140.9	1550/11	4000	4000	6500	0.23	11	6.0	18	21
27	102	104	0.9	2.4	F202_1130 EZ301U	270	480	112.7	1240/11	4000	4000	6500	0.24	11	6.0	18	21
27	174	184	1.5	1.4	F202_1130 EZ302U	270	480	112.7	1240/11	4000	4000	6500	0.34	11	6.0	18	22
32	85	86	0.8	2.8	F202_0940 EZ301U	250	480	93.82	1032/11	4000	4000	6500	0.26	11	6.0	18	21
32	145	153	1.4	1.7	F202_0940 EZ302U	270	480	93.82	1032/11	4000	4000	6500	0.36	11	6.0	18	22
32	188	199	1.8	1.3	F202_0940 EZ303U	270	480	93.82	1032/11	4000	4000	6500	0.47	11	6.0	18	22
43	108	114	1.2	2.2	F202_0700 EZ302U	270	430	70.13	5400/77	4000	4000	6500	0.41	11	6.0	18	22
43	141	149	1.5	1.7	F202_0700 EZ303U	270	430	70.13	5400/77	4000	4000	6500	0.52	11	6.0	18	22
43	190	204	2.1	1.3	F202_0700 EZ401U	270	480	70.13	5400/77	4000	4000	6500	1.1	11	6.0	18	23
53	154	165	1.9	1.6	F202_0570 EZ401U	270	480	56.73	624/11	4000	4000	6500	1.1	11	6.0	18	23
64	73	77	1.0	3.3	F202_0470 EZ302U	230	340	47.05	1035/22	4000	4000	6500	0.52	11	6.0	18	22
64	94	100	1.3	2.5	F202_0470 EZ303U	270	340	47.05	1035/22	4000	4000	6500	0.63	11	6.0	18	22
64	128	137	1.7	1.9	F202_0470 EZ401U	270	480	47.05	1035/22	4000	4000	6500	1.2	11	6.0	18	23
85	55	58	1.0	3.8	F202_0350 EZ302U	170	260	35.46	390/11	3800	3800	6000	0.65	11	6.0	18	22
85	71	75	1.3	2.9	F202_0350 EZ303U	210	260	35.46	390/11	3800	3800	6000	0.76	11	6.0	18	22
85	96	103	1.6	2.3	F202_0350 EZ401U	270	480	35.46	390/11	3800	3800	6000	1.3	11	6.0	18	23
85	148	162	2.5	1.5	F202_0350 EZ501U	270	480	35.46	390/11	3800	3800	6000	3.3	11	6.0	18	24
85	162	179	2.7	1.4	F202_0350 EZ402U	270	480	35.46	390/11	3800	3800	6000	2.0	11	6.0	18	25
107	76	82	1.6	2.7	F202_0280 EZ401U	230	480	28.11	4020/143	3800	3800	6000	1.4	11	6.0	18	23
107	117	128	2.4	1.7	F202_0280 EZ501U	270	480	28.11	4020/143	3800	3800	6000	3.4	11	6.0	18	24
107	128	142	2.6	1.6	F202_0280 EZ402U	270	480	28.11	4020/143	3800	3800	6000	2.1	11	6.0	18	25
128	36	38	1.2	3.8	F202_0230 EZ302U	110	170	23.43	2320/99	3600	3600	6000	0.95	11	6.0	18	22
128	47	50	1.6	2.9	F202_0230 EZ303U	140	170	23.43	2320/99	3600	3600	6000	1.1	11	6.0	18	22
128	64	68	1.5	3.0	F202_0230 EZ401U	190	480	23.43	2320/99	3600	3600	6000	1.6	11	6.0	18	23
128	98	107	2.3	1.9	F202_0230 EZ501U	270	480	23.43	2320/99	3600	3600	6000	3.6	11	6.0	18	24
128	107	118	2.5	1.8	F202_0230 EZ402U	270	480	23.43	2320/99	3600	3600	6000	2.3	11	6.0	18	25
128	157	195	3.7	1.2	F202_0230 EZ404U	270	480	23.43	2320/99	3600	3600	6000	3.6	11	6.0	18	27
128	168	182	4.0	1.1	F202_0230 EZ502U	270	480	23.43	2320/99	3600	3600	6000	5.9	11	6.0	18	26
128	168	189	4.0	1.1	F202_0230 EZ701U	270	480	23.43	2320/99	3600	3600	6000	9.2	11	6.0	18	28
161	51	54	1.5	3.5	F202_0185 EZ401U	150	480	18.65	6360/341	3600	3600	6000	1.9	11	6.0	18	23
161	78	85	2.2	2.3	F202_0185 EZ501U	270	480	18.65	6360/341	3600	3600	6000	3.8	11	6.0	18	24
161	85	94	2.5	2.1	F202_0185 EZ402U	270	480	18.65	6360/341	3600	3600	6000	2.6	11	6.0	18	25
161	125	156	3.6	1.4	F202_0185 EZ404U	270	480	18.65	6360/341	3600	3600	6000	3.9	11	6.0	18	27
161	134	145	3.9	1.3	F202_0185 EZ502U	270	480	18.65	6360/341	3600	3600	6000	6.1	11	6.0	18	26
161	134	150	3.9	1.3	F202_0185 EZ701U	270	480	18.65	6360/341	3600	3600	6000	9.4	11	6.0	18	28
161	175	201	5.1	1.0	F202_0185 EZ503U	270	480	18.65	6360/341	3600	3600	6000	8.5	11	6.0	18	27
220	21	22	1.6	3.8	F202_0135 EZ302U	66	99	13.63	109/8	3800	3800	6000	0.93	11	8.0	16	22
220	27	29	2.1	2.9	F202_0135 EZ303U	79	99	13.63	109/8	3800	3800	6000	1.0	11	8.0	16	22
220	37	40	1.4	4.3	F202_0135 EZ401U	110	400	13.63	109/8	3800	3800	6000	1.6	11	8.0	16	23
220	57	62	2.1	2.8	F202_0135 EZ501U	210	400	13.63	109/8	3800	3800	6000	3.5	11	8.0	16	24
220	62	69	2.3	2.6	F202_0135 EZ402U	210	400	13.63	109/8	3800	3800	6000	2.3	11	8.0	16	25
220	91	114	3.4	1.7	F202_0135 EZ404U	210	400	13.63	109/8	3800	3800	6000	3.6	11	8.0	16	27
220	98	106	3.7	1.6	F202_0135 EZ502U	210	400	13.63	109/8	3800	3800	6000	5.8	11	8.0	16	26
220	98	110	3.7	1.6	F202_0135 EZ701U	210	400	13.63	109/8	3800	3800	6000	9.1	11	8.0	16	28
220	128	147	4.8	1.2	F202_0135 EZ503U	210	400	13.63	109/8	3800	3800	6000	8.2	11	8.0	16	27
278	45	49	2.0	3.3	F202_0110 EZ501U	170	310	10.80	7303/676	3800	3800	6000	3.8	11	8.0	16	24

n_{2N} [rpm]	M_{2N} [Nm]	$M_{2,0}$ [Nm]	a_{th}	S	Type	M_{2acc} [Nm]	M_{2NOT} [Nm]	i	i_{exakt}	n_{1maxDB} EL1,2,3,4 [rpm]	n_{1maxDB} EL5,6 [rpm]	n_{1maxZB} [rpm]	J_1 [kgcm²]	$\Delta\varphi_2$ [arcmin]	$\Delta\varphi_{2redII}$ [arcmin]	C_2 [Nm/arcmin]	m [kg]
F2 (n_{1N} = 3000 rpm, $M_{2acc,max}$ = 270 Nm)																	
278	49	54	2.2	3.0	F202_0110 EZ402U	170	310	10.80	7303/676	3800	3800	6000	2.6	11	8.0	16	25
278	72	90	3.3	2.0	F202_0110 EZ404U	210	310	10.80	7303/676	3800	3800	6000	3.9	11	8.0	16	27
278	78	84	3.5	1.9	F202_0110 EZ502U	210	310	10.80	7303/676	3800	3800	6000	6.1	11	8.0	16	26
278	78	87	3.5	1.9	F202_0110 EZ701U	210	400	10.80	7303/676	3800	3800	6000	9.4	11	8.0	16	28
278	102	116	4.6	1.4	F202_0110 EZ503U	210	310	10.80	7303/676	3800	3800	6000	8.5	11	8.0	16	27
278	126	151	5.7	1.2	F202_0110 EZ702U	210	400	10.80	7303/676	3800	3800	6000	15	11	8.0	16	30
333	14	15	1.9	3.8	F202_0090 EZ302U	44	66	9.006	3161/351	3600	3600	6000	1.6	11	8.0	16	22
333	18	19	2.5	2.9	F202_0090 EZ303U	52	66	9.006	3161/351	3600	3600	6000	1.7	11	8.0	16	22
333	38	41	2.0	3.7	F202_0090 EZ501U	140	260	9.006	3161/351	3600	3600	6000	4.2	11	8.0	16	24
333	41	45	2.2	3.4	F202_0090 EZ402U	140	260	9.006	3161/351	3600	3600	6000	2.9	11	8.0	16	25
333	60	75	3.2	2.3	F202_0090 EZ404U	210	260	9.006	3161/351	3600	3600	6000	4.3	11	8.0	16	27
333	65	70	3.4	2.1	F202_0090 EZ502U	210	260	9.006	3161/351	3600	3600	6000	6.5	11	8.0	16	26
333	65	73	3.4	2.1	F202_0090 EZ701U	170	400	9.006	3161/351	3600	3600	6000	9.8	11	8.0	16	28
333	85	97	4.5	1.6	F202_0090 EZ503U	210	260	9.006	3161/351	3600	3600	6000	8.9	11	8.0	16	27
333	105	126	5.6	1.3	F202_0090 EZ702U	210	400	9.006	3161/351	3600	3600	6000	15	11	8.0	16	30
333	118	140	6.2	1.2	F202_0090 EZ505U	210	400	9.006	3161/351	3600	3600	6000	13	11	8.0	16	30
419	30	33	1.9	4.3	F202_0072 EZ501U	110	210	7.167	5777/806	3600	3600	6000	4.8	11	8.0	16	24
419	33	36	2.1	3.9	F202_0072 EZ402U	110	210	7.167	5777/806	3600	3600	6000	3.6	11	8.0	16	25
419	48	60	3.1	2.7	F202_0072 EZ404U	170	210	7.167	5777/806	3600	3600	6000	4.9	11	8.0	16	27
419	51	56	3.3	2.5	F202_0072 EZ502U	170	210	7.167	5777/806	3600	3600	6000	7.1	11	8.0	16	26
419	51	58	3.3	2.5	F202_0072 EZ701U	140	400	7.167	5777/806	3600	3600	6000	10	11	8.0	16	28
419	67	77	4.3	1.9	F202_0072 EZ503U	170	210	7.167	5777/806	3600	3600	6000	9.5	11	8.0	16	27
419	83	100	5.3	1.5	F202_0072 EZ702U	210	400	7.167	5777/806	3600	3600	6000	16	11	8.0	16	30
419	94	111	6.0	1.4	F202_0072 EZ505U	210	400	7.167	5777/806	3600	3600	6000	14	11	8.0	16	30
419	115	145	7.3	1.1	F202_0072 EZ703U	210	400	7.167	5777/806	3600	3600	6000	24	11	8.0	16	32
540	40	45	3.2	3.0	F202_0056 EZ701U	110	400	5.552	5341/962	3100	3100	5000	12	11	8.0	16	28
540	65	78	5.1	1.8	F202_0056 EZ702U	210	400	5.552	5341/962	3100	3100	5000	17	11	8.0	16	30
540	73	86	5.8	1.6	F202_0056 EZ505U	210	400	5.552	5341/962	3100	3100	5000	15	11	8.0	16	30
540	89	112	7.0	1.3	F202_0056 EZ703U	210	400	5.552	5341/962	3100	3100	5000	25	11	8.0	16	32
641	31	39	2.9	3.5	F202_0047 EZ404U	110	140	4.680	2616/559	3100	3100	5000	7.0	11	8.0	16	27
641	34	36	3.1	3.2	F202_0047 EZ502U	110	140	4.680	2616/559	3100	3100	5000	9.3	11	8.0	16	26
641	34	38	3.1	3.3	F202_0047 EZ701U	91	340	4.680	2616/559	3100	3100	5000	13	11	8.0	16	28
641	44	50	4.1	2.5	F202_0047 EZ503U	110	140	4.680	2616/559	3100	3100	5000	12	11	8.0	16	27
641	54	65	5.0	2.0	F202_0047 EZ702U	190	340	4.680	2616/559	3100	3100	5000	18	11	8.0	16	30
641	61	73	5.6	1.8	F202_0047 EZ505U	210	340	4.680	2616/559	3100	3100	5000	16	11	8.0	16	30
641	75	94	6.8	1.5	F202_0047 EZ703U	210	340	4.680	2616/559	3100	3100	5000	26	11	8.0	16	32
F2 (n_{1N} = 4500 rpm, $M_{2acc,max}$ = 210 Nm)																	
417	100	160	5.2	1.3	F202_0110 EZ505U	210	400	10.80	7303/676	3800	3800	6000	13	11	8.0	16	30
500	83	134	5.0	1.5	F202_0090 EZ505U	210	400	9.006	3161/351	3600	3600	6000	13	11	8.0	16	30
628	66	106	4.8	1.7	F202_0072 EZ505U	210	400	7.167	5777/806	3600	3600	6000	14	11	8.0	16	30
628	84	139	6.2	1.3	F202_0072 EZ703U	210	400	7.167	5777/806	3600	3600	6000	24	11	8.0	16	32
811	51	82	4.6	2.0	F202_0056 EZ505U	210	400	5.552	5341/962	3100	3100	5000	15	11	8.0	16	30
811	65	108	5.9	1.6	F202_0056 EZ703U	210	400	5.552	5341/962	3100	3100	5000	25	11	8.0	16	32
962	43	69	4.5	2.3	F202_0047 EZ505U	210	340	4.680	2616/559	3100	3100	5000	16	11	8.0	16	30
962	55	91	5.7	1.8	F202_0047 EZ703U	210	340	4.680	2616/559	3100	3100	5000	26	11	8.0	16	32
F2 (n_{1N} = 6000 rpm, $M_{2acc,max}$ = 270 Nm)																	
53	164	184	1.4	1.5	F202_1130 EZ302U	270	480	112.7	1240/11	4000	4000	6500	0.34	11	6.0	18	22
64	137	153	1.3	1.8	F202_0940 EZ302U	270	480	93.82	1032/11	4000	4000	6500	0.36	11	6.0	18	22
64	178	205	1.7	1.3	F202_0940 EZ303U	270	480	93.82	1032/11	4000	4000	6500	0.47	11	6.0	18	22
86	102	114	1.2	2.1	F202_0700 EZ302U	270	430	70.13	5400/77	4000	4000	6500	0.41	11	6.0	18	22
86	133	153	1.6	1.6	F202_0700 EZ303U	270	430	70.13	5400/77	4000	4000	6500	0.52	11	6.0	18	22
86	156	190	1.9	1.4	F202_0700 EZ401U	270	480	70.13	5400/77	4000	4000	6500	1.1	11	6.0	18	23
106	127	154	1.8	1.6	F202_0570 EZ401U	270	480	56.73	624/11	4000	4000	6500	1.1	11	6.0	18	23
128	68	77	1.2	2.8	F202_0470 EZ302U	230	340	47.05	1035/22	4000	4000	6500	0.52	11	6.0	18	22
128	89	103	1.5	2.1	F202_0470 EZ303U	270	340	47.05	1035/22	4000	4000	6500	0.63	11	6.0	18	22
128	105	128	1.8	1.8	F202_0470 EZ401U	270	480	47.05	1035/22	4000	4000	6500	1.2	11	6.0	18	23
128	155	201	2.6	1.2	F202_0470 EZ501U	270	480	47.05	1035/22	4000	4000	6500	3.1	11	6.0	18	24
169	52	58	1.1	3.4	F202_0350 EZ302U	170	260	35.46	390/11	3800	3800	6000	0.65	11	6.0	18	22
169	67	77	1.4	2.6	F202_0350 EZ303U	210	260	35.46	390/11	3800	3800	6000	0.76	11	6.0	18	22
169	79	96	1.7	2.2	F202_0350 EZ401U	270	480	35.46	390/11	3800	3800	6000	1.3	11	6.0	18	23
169	117	151	2.5	1.5	F202_0350 EZ501U	270	480	35.46	390/11	3800	3800	6000	3.3	11	6.0	18	24
169	120	169	2.6	1.4	F202_0350 EZ402U	270	480	35.46	390/11	3800	3800	6000	2.0	11	6.0	18	25
213	63	76	1.6	2.6	F202_0280 EZ401U	230	480	28.11	4020/143	3800	3800	6000	1.4	11	6.0	18	23
213	93	120	2.4	1.7	F202_0280 EZ501U	270	480	28.11	4020/143	3800	3800	6000	3.4	11	6.0	18	24

n_{2N} [rpm]	M_{2N} [Nm]	$M_{2,0}$ [Nm]	a_{th}	S	Type	M_{2acc} [Nm]	M_{2NOT} [Nm]	i	i_{exakt}	n_{1maxDB} EL1,2,3,4 [rpm]	n_{1maxDB} EL5,6 [rpm]	n_{1maxZB} [rpm]	J_1 [kgcm²]	$\Delta\varphi_2$ [arcmin]	$\Delta\varphi_{2redII}$ [arcmin]	C_2 [Nm/ arcmin]	m [kg]
F2 (n_{1N} = 6000 rpm, $M_{2acc,max}$ = 270 Nm)																	
213	95	134	2.5	1.7	F202_0280 EZ402U	270	480	28.11	4020/143	3800	3800	6000	2.1	11	6.0	18	25
256	34	38	1.1	4.0	F202_0230 EZ302U	110	170	23.43	2320/99	3600	3600	6000	0.95	11	6.0	18	22
256	45	51	1.5	3.1	F202_0230 EZ303U	140	170	23.43	2320/99	3600	3600	6000	1.1	11	6.0	18	22
256	52	64	1.6	2.9	F202_0230 EZ401U	190	480	23.43	2320/99	3600	3600	6000	1.6	11	6.0	18	23
256	77	100	2.3	2.0	F202_0230 EZ501U	270	480	23.43	2320/99	3600	3600	6000	3.6	11	6.0	18	24
256	80	111	2.4	1.9	F202_0230 EZ402U	270	480	23.43	2320/99	3600	3600	6000	2.3	11	6.0	18	25
256	118	177	3.6	1.3	F202_0230 EZ502U	270	480	23.43	2320/99	3600	3600	6000	5.9	11	6.0	18	26
256	118	180	3.6	1.3	F202_0230 EZ701U	270	480	23.43	2320/99	3600	3600	6000	9.2	11	6.0	18	28
256	132	191	4.0	1.1	F202_0230 EZ404U	270	480	23.43	2320/99	3600	3600	6000	3.6	11	6.0	18	27
322	42	51	1.5	3.4	F202_0185 EZ401U	150	480	18.65	6360/341	3600	3600	6000	1.9	11	6.0	18	23
322	62	80	2.2	2.3	F202_0185 EZ501U	270	480	18.65	6360/341	3600	3600	6000	3.8	11	6.0	18	24
322	63	89	2.3	2.2	F202_0185 EZ402U	270	480	18.65	6360/341	3600	3600	6000	2.6	11	6.0	18	25
322	94	141	3.4	1.5	F202_0185 EZ502U	270	480	18.65	6360/341	3600	3600	6000	6.1	11	6.0	18	26
322	94	143	3.4	1.5	F202_0185 EZ701U	270	480	18.65	6360/341	3600	3600	6000	9.4	11	6.0	18	28
322	105	152	3.8	1.3	F202_0185 EZ404U	270	480	18.65	6360/341	3600	3600	6000	3.9	11	6.0	18	27
322	112	192	4.1	1.2	F202_0185 EZ503U	270	480	18.65	6360/341	3600	3600	6000	8.5	11	6.0	18	27
440	20	22	1.5	4.0	F202_0135 EZ302U	66	99	13.63	109/8	3800	3800	6000	0.93	11	8.0	16	22
440	26	30	1.9	3.1	F202_0135 EZ303U	79	99	13.63	109/8	3800	3800	6000	1.0	11	8.0	16	22
440	30	37	1.4	4.2	F202_0135 EZ401U	110	400	13.63	109/8	3800	3800	6000	1.6	11	8.0	16	23
440	45	58	2.1	2.8	F202_0135 EZ501U	210	400	13.63	109/8	3800	3800	6000	3.5	11	8.0	16	24
440	46	65	2.2	2.7	F202_0135 EZ402U	210	400	13.63	109/8	3800	3800	6000	2.3	11	8.0	16	25
440	69	103	3.2	1.8	F202_0135 EZ502U	210	400	13.63	109/8	3800	3800	6000	5.8	11	8.0	16	26
440	69	104	3.2	1.8	F202_0135 EZ701U	210	400	13.63	109/8	3800	3800	6000	9.1	11	8.0	16	28
440	77	111	3.6	1.6	F202_0135 EZ404U	210	400	13.63	109/8	3800	3800	6000	3.6	11	8.0	16	27
440	82	140	3.9	1.5	F202_0135 EZ503U	210	400	13.63	109/8	3800	3800	6000	8.2	11	8.0	16	27
555	24	29	1.4	4.8	F202_0110 EZ401U	89	310	10.80	7303/676	3800	3800	6000	1.9	11	8.0	16	23
555	36	46	2.0	3.3	F202_0110 EZ501U	170	310	10.80	7303/676	3800	3800	6000	3.8	11	8.0	16	24
555	37	51	2.1	3.2	F202_0110 EZ402U	170	310	10.80	7303/676	3800	3800	6000	2.6	11	8.0	16	25
555	54	82	3.1	2.1	F202_0110 EZ502U	210	310	10.80	7303/676	3800	3800	6000	6.1	11	8.0	16	26
555	54	83	3.1	2.1	F202_0110 EZ701U	210	400	10.80	7303/676	3800	3800	6000	9.4	11	8.0	16	28
555	61	88	3.5	1.9	F202_0110 EZ404U	210	310	10.80	7303/676	3800	3800	6000	3.9	11	8.0	16	27
555	65	111	3.7	1.8	F202_0110 EZ503U	210	310	10.80	7303/676	3800	3800	6000	8.5	11	8.0	16	27
555	75	150	4.3	1.5	F202_0110 EZ702U	210	400	10.80	7303/676	3800	3800	6000	15	11	8.0	16	30
666	13	15	1.8	4.0	F202_0090 EZ302U	44	66	9.006	3161/351	3600	3600	6000	1.6	11	8.0	16	22
666	17	20	2.4	3.1	F202_0090 EZ303U	52	66	9.006	3161/351	3600	3600	6000	1.7	11	8.0	16	22
666	30	38	2.0	3.7	F202_0090 EZ501U	140	260	9.006	3161/351	3600	3600	6000	4.2	11	8.0	16	24
666	31	43	2.0	3.6	F202_0090 EZ402U	140	260	9.006	3161/351	3600	3600	6000	2.9	11	8.0	16	25
666	45	68	3.0	2.4	F202_0090 EZ502U	210	260	9.006	3161/351	3600	3600	6000	6.5	11	8.0	16	26
666	45	69	3.0	2.4	F202_0090 EZ701U	170	400	9.006	3161/351	3600	3600	6000	9.8	11	8.0	16	28
666	51	73	3.4	2.2	F202_0090 EZ404U	210	260	9.006	3161/351	3600	3600	6000	4.3	11	8.0	16	27
666	54	93	3.6	2.0	F202_0090 EZ503U	210	260	9.006	3161/351	3600	3600	6000	8.9	11	8.0	16	27
666	63	125	4.2	1.7	F202_0090 EZ702U	210	400	9.006	3161/351	3600	3600	6000	15	11	8.0	16	30
837	24	31	1.9	4.3	F202_0072 EZ501U	110	210	7.167	5777/806	3600	3600	6000	4.8	11	8.0	16	24
837	24	34	2.0	4.2	F202_0072 EZ402U	110	210	7.167	5777/806	3600	3600	6000	3.6	11	8.0	16	25
837	36	54	2.9	2.8	F202_0072 EZ502U	170	210	7.167	5777/806	3600	3600	6000	7.1	11	8.0	16	26
837	36	55	2.9	2.8	F202_0072 EZ701U	140	400	7.167	5777/806	3600	3600	6000	10	11	8.0	16	28
837	40	58	3.3	2.5	F202_0072 EZ404U	170	210	7.167	5777/806	3600	3600	6000	4.9	11	8.0	16	27
837	43	74	3.5	2.4	F202_0072 EZ503U	170	210	7.167	5777/806	3600	3600	6000	9.5	11	8.0	16	27
837	50	99	4.0	2.0	F202_0072 EZ702U	210	400	7.167	5777/806	3600	3600	6000	16	11	8.0	16	30
F3 (n_{1N} = 3000 rpm, $M_{2acc,max}$ = 450 Nm)																	
16	281	297	1.2	1.4	F303_1850 EZ302U	450	800	184.8	29939/162	4000	4000	6500	0.37	11	7.0	22	34
21	217	229	1.1	1.8	F302_1410 EZ302U	450	600	140.6	7595/54	4000	4000	6500	0.37	11	6.0	22	29
21	282	299	1.4	1.4	F302_1410 EZ303U	450	600	140.6	7595/54	4000	4000	6500	0.48	11	6.0	22	30
27	306	328	1.7	1.3	F302_1130 EZ401U	450	800	112.8	3724/33	4000	4000	6500	1.0	11	6.0	22	31
32	254	273	1.6	1.6	F302_0940 EZ401U	450	800	93.64	4214/45	4000	4000	6500	1.1	11	6.0	22	31
43	191	205	1.4	2.1	F302_0700 EZ401U	450	800	70.36	2744/39	4000	4000	6500	1.2	11	6.0	22	31
43	293	321	2.1	1.4	F302_0700 EZ501U	450	800	70.36	2744/39	4000	4000	6500	3.2	11	6.0	22	32
53	153	164	1.2	2.6	F302_0560 EZ401U	450	800	56.49	4067/72	4000	4000	6500	1.3	11	6.0	22	31
53	236	258	1.9	1.7	F302_0560 EZ501U	450	800	56.49	4067/72	4000	4000	6500	3.3	11	6.0	22	32
53	258	285	2.1	1.6	F302_0560 EZ402U	450	800	56.49	4067/72	4000	4000	6500	2.0	11	6.0	22	32
64	128	137	1.1	3.1	F302_0470 EZ401U	390	800	47.19	1274/27	4000	4000	6500	1.4	11	6.0	22	31
64	197	215	1.7	2.0	F302_0470 EZ501U	450	800	47.19	1274/27	4000	4000	6500	3.4	11	6.0	22	32
64	215	238	1.9	1.9	F302_0470 EZ402U	450	800	47.19	1274/27	4000	4000	6500	2.1	11	6.0	22	32
86	95	102	1.1	3.8	F302_0350 EZ401U	290	800	35.03	7252/207	3700	3700	5500	1.7	11	6.0	22	31

n_{2N} [rpm]	M_{2N} [Nm]	$M_{2,0}$ [Nm]	a_{th}	S	Type	M_{2acc} [Nm]	M_{2NOT} [Nm]	i	i_{exakt}	n_{1maxDB} EL1,2,3,4 [rpm]	n_{1maxDB} EL5,6 [rpm]	n_{1maxZB} [rpm]	J_1 [kgcm²]	$\Delta\varphi_2$ [arcmin]	$\Delta\varphi_{2redII}$ [arcmin]	C_2 [Nm/ arcmin]	m [kg]
F3 (n_{1N} = 3000 rpm, $M_{2acc,max}$ = 450 Nm)																	
86	146	160	1.6	2.5	F302_0350 EZ501U	450	800	35.03	7252/207	3700	3700	5500	3.6	11	6.0	22	32
86	160	177	1.8	2.3	F302_0350 EZ402U	450	800	35.03	7252/207	3700	3700	5500	2.4	11	6.0	22	32
86	234	292	2.6	1.5	F302_0350 EZ404U	450	800	35.03	7252/207	3700	3700	5500	3.7	11	6.0	22	34
86	251	272	2.8	1.4	F302_0350 EZ502U	450	800	35.03	7252/207	3700	3700	5500	5.9	11	6.0	22	34
86	251	282	2.8	1.4	F302_0350 EZ701U	450	800	35.03	7252/207	3700	3700	5500	9.2	11	6.0	22	35
106	77	82	1.0	4.4	F302_0280 EZ401U	230	800	28.23	6860/243	3700	3700	5500	2.0	11	6.0	22	31
106	118	129	1.6	2.9	F302_0280 EZ501U	440	800	28.23	6860/243	3700	3700	5500	3.9	11	6.0	22	32
106	129	142	1.7	2.6	F302_0280 EZ402U	440	800	28.23	6860/243	3700	3700	5500	2.7	11	6.0	22	32
106	189	235	2.5	1.8	F302_0280 EZ404U	450	800	28.23	6860/243	3700	3700	5500	4.0	11	6.0	22	34
106	203	219	2.7	1.7	F302_0280 EZ502U	450	800	28.23	6860/243	3700	3700	5500	6.2	11	6.0	22	34
106	203	227	2.7	1.7	F302_0280 EZ701U	450	800	28.23	6860/243	3700	3700	5500	9.5	11	6.0	22	35
106	266	304	3.6	1.3	F302_0280 EZ503U	450	800	28.23	6860/243	3700	3700	5500	8.6	11	6.0	22	35
128	64	68	1.0	5.0	F302_0240 EZ401U	190	680	23.52	588/25	3500	3500	5000	2.3	11	6.0	22	31
128	98	107	1.5	3.2	F302_0240 EZ501U	370	680	23.52	588/25	3500	3500	5000	4.3	11	6.0	22	32
128	107	119	1.7	3.0	F302_0240 EZ402U	370	680	23.52	588/25	3500	3500	5000	3.0	11	6.0	22	32
128	157	196	2.5	2.0	F302_0240 EZ404U	450	680	23.52	588/25	3500	3500	5000	4.4	11	6.0	22	34
128	169	183	2.6	1.9	F302_0240 EZ502U	450	680	23.52	588/25	3500	3500	5000	6.6	11	6.0	22	34
128	169	189	2.6	1.9	F302_0240 EZ701U	450	800	23.52	588/25	3500	3500	5000	9.9	11	6.0	22	35
128	221	253	3.5	1.4	F302_0240 EZ503U	450	680	23.52	588/25	3500	3500	5000	9.0	11	6.0	22	35
128	274	329	4.3	1.2	F302_0240 EZ702U	450	800	23.52	588/25	3500	3500	5000	15	11	6.0	22	38
160	135	151	2.5	2.2	F302_0190 EZ701U	360	800	18.77	4900/261	3500	3500	5000	10	11	6.0	22	35
160	219	262	4.1	1.3	F302_0190 EZ702U	450	800	18.77	4900/261	3500	3500	5000	16	11	6.0	22	38
160	246	291	4.6	1.2	F302_0190 EZ505U	450	800	18.77	4900/261	3500	3500	5000	14	11	6.0	22	38
224	56	61	1.4	4.7	F302_0135 EZ501U	210	390	13.38	7696/575	3700	3700	5500	4.2	11	8.0	20	32
224	61	68	1.5	4.3	F302_0135 EZ402U	210	390	13.38	7696/575	3700	3700	5500	2.9	11	8.0	20	32
224	90	112	2.2	2.9	F302_0135 EZ404U	310	390	13.38	7696/575	3700	3700	5500	4.3	11	8.0	20	34
224	96	104	2.4	2.7	F302_0135 EZ502U	310	390	13.38	7696/575	3700	3700	5500	6.5	11	8.0	20	34
224	96	108	2.4	2.7	F302_0135 EZ701U	260	650	13.38	7696/575	3700	3700	5500	9.8	11	8.0	20	35
224	126	144	3.1	2.1	F302_0135 EZ503U	310	390	13.38	7696/575	3700	3700	5500	8.9	11	8.0	20	35
224	156	187	3.9	1.7	F302_0135 EZ702U	350	650	13.38	7696/575	3700	3700	5500	15	11	8.0	20	38
224	175	208	4.4	1.5	F302_0135 EZ505U	350	650	13.38	7696/575	3700	3700	5500	13	11	8.0	20	38
224	214	270	5.3	1.2	F302_0135 EZ703U	350	650	13.38	7696/575	3700	3700	5500	23	11	8.0	20	40
278	49	54	1.5	5.0	F302_0110 EZ402U	170	310	10.79	1456/135	3700	3700	5500	3.5	11	8.0	20	32
278	72	90	2.2	3.4	F302_0110 EZ404U	250	310	10.79	1456/135	3700	3700	5500	4.9	11	8.0	20	34
278	77	84	2.3	3.2	F302_0110 EZ502U	250	310	10.79	1456/135	3700	3700	5500	7.1	11	8.0	20	34
278	77	87	2.3	3.2	F302_0110 EZ701U	210	650	10.79	1456/135	3700	3700	5500	10	11	8.0	20	35
278	101	116	3.0	2.4	F302_0110 EZ503U	250	310	10.79	1456/135	3700	3700	5500	9.5	11	8.0	20	35
278	126	151	3.7	2.0	F302_0110 EZ702U	350	650	10.79	1456/135	3700	3700	5500	16	11	8.0	20	38
278	141	167	4.2	1.7	F302_0110 EZ505U	350	650	10.79	1456/135	3700	3700	5500	14	11	8.0	20	38
278	173	218	5.2	1.4	F302_0110 EZ703U	350	650	10.79	1456/135	3700	3700	5500	24	11	8.0	20	40
334	60	75	2.3	3.5	F302_0090 EZ404U	210	260	8.986	5616/625	3500	3500	5000	5.6	11	8.0	20	34
334	65	70	2.5	3.2	F302_0090 EZ502U	210	260	8.986	5616/625	3500	3500	5000	7.8	11	8.0	20	34
334	65	72	2.2	3.6	F302_0090 EZ701U	170	650	8.986	5616/625	3500	3500	5000	11	11	8.0	20	35
334	85	97	3.2	2.5	F302_0090 EZ503U	210	260	8.986	5616/625	3500	3500	5000	10	11	8.0	20	35
334	105	126	3.6	2.2	F302_0090 EZ702U	350	650	8.986	5616/625	3500	3500	5000	16	11	8.0	20	38
334	118	139	4.1	2.0	F302_0090 EZ505U	350	650	8.986	5616/625	3500	3500	5000	15	11	8.0	20	38
334	144	181	5.0	1.6	F302_0090 EZ703U	350	650	8.986	5616/625	3500	3500	5000	24	11	8.0	20	40
418	51	58	2.2	4.2	F302_0072 EZ701U	140	520	7.172	208/29	3500	3500	5000	12	11	8.0	20	35
418	83	100	3.5	2.6	F302_0072 EZ702U	290	520	7.172	208/29	3500	3500	5000	18	11	8.0	20	38
418	94	111	3.9	2.3	F302_0072 EZ505U	350	520	7.172	208/29	3500	3500	5000	16	11	8.0	20	38
418	115	145	4.8	1.9	F302_0072 EZ703U	350	520	7.172	208/29	3500	3500	5000	25	11	8.0	20	40
524	41	46	2.1	4.8	F302_0057 EZ701U	110	420	5.720	143/25	3000	3000	4500	14	11	8.0	20	35
524	67	80	3.4	3.0	F302_0057 EZ702U	230	420	5.720	143/25	3000	3000	4500	19	11	8.0	20	38
524	75	89	3.8	2.6	F302_0057 EZ505U	330	420	5.720	143/25	3000	3000	4500	18	11	8.0	20	38
524	92	115	4.6	2.2	F302_0057 EZ703U	330	420	5.720	143/25	3000	3000	4500	27	11	8.0	20	40
646	54	65	3.3	3.4	F302_0046 EZ702U	180	340	4.644	4992/1075	3000	3000	4500	22	11	8.0	20	38
646	61	72	3.7	3.0	F302_0046 EZ505U	270	340	4.644	4992/1075	3000	3000	4500	20	11	8.0	20	38
646	74	94	4.5	2.5	F302_0046 EZ703U	270	340	4.644	4992/1075	3000	3000	4500	30	11	8.0	20	40
646	96	136	5.8	1.9	F302_0046 EZ705U	350	650	4.644	4992/1075	3000	3000	4500	42	11	8.0	20	45
F3 (n_{1N} = 4500 rpm, $M_{2acc,max}$ = 450 Nm)																	
240	173	279	3.7	1.5	F302_0190 EZ505U	450	800	18.77	4900/261	3500	3500	5000	14	11	6.0	22	38
336	123	199	3.5	1.9	F302_0135 EZ505U	350	650	13.38	7696/575	3700	3700	5500	13	11	8.0	20	38
336	157	260	4.5	1.5	F302_0135 EZ703U	350	650	13.38	7696/575	3700	3700	5500	23	11	8.0	20	40
417	99	160	3.4	2.2	F302_0110 EZ505U	350	650	10.79	1456/135	3700	3700	5500	14	11	8.0	20	38

n_{2N} [rpm]	M_{2N} [Nm]	$M_{2,0}$ [Nm]	a_{th}	S	Type	M_{2acc} [Nm]	M_{2NOT} [Nm]	i	i_{exakt}	n_{1maxDB} EL1,2,3,4 [rpm]	n_{1maxDB} EL5,6 [rpm]	n_{1maxZB} [rpm]	J_1 [kgcm²]	$\Delta\varphi_2$ [arcmin]	$\Delta\varphi_{2redII}$ [arcmin]	C_2 [Nm/ arcmin]	m [kg]
F3 (n_{1N} = 4500 rpm, $M_{2acc,max}$ = 450 Nm)																	
417	127	209	4.3	1.7	F302_0110 EZ703U	350	650	10.79	1456/135	3700	3700	5500	24	11	8.0	20	40
501	83	133	3.3	2.4	F302_0090 EZ505U	350	650	8.986	5616/625	3500	3500	5000	15	11	8.0	20	38
501	105	174	4.2	1.9	F302_0090 EZ703U	350	650	8.986	5616/625	3500	3500	5000	24	11	8.0	20	40
627	66	106	3.2	2.8	F302_0072 EZ505U	350	520	7.172	208/29	3500	3500	5000	16	11	8.0	20	38
627	84	139	4.0	2.2	F302_0072 EZ703U	350	520	7.172	208/29	3500	3500	5000	25	11	8.0	20	40
787	53	85	3.1	3.3	F302_0057 EZ505U	330	420	5.720	143/25	3000	3000	4500	18	11	8.0	20	38
787	67	111	3.9	2.6	F302_0057 EZ703U	330	420	5.720	143/25	3000	3000	4500	27	11	8.0	20	40
969	43	69	3.0	3.8	F302_0046 EZ505U	270	340	4.644	4992/1075	3000	3000	4500	20	11	8.0	20	38
969	55	90	3.8	3.0	F302_0046 EZ703U	270	340	4.644	4992/1075	3000	3000	4500	30	11	8.0	20	40
969	74	135	5.1	2.2	F302_0046 EZ705U	350	650	4.644	4992/1075	3000	3000	4500	42	11	8.0	20	45
F3 (n_{1N} = 6000 rpm, $M_{2acc,max}$ = 450 Nm)																	
32	265	297	1.2	1.5	F303_1850 EZ302U	450	800	184.8	29939/162	4000	4000	6500	0.37	11	7.0	22	34
43	205	229	1.0	2.0	F302_1410 EZ302U	450	600	140.6	7595/54	4000	4000	6500	0.37	11	6.0	22	29
43	267	307	1.4	1.5	F302_1410 EZ303U	450	600	140.6	7595/54	4000	4000	6500	0.48	11	6.0	22	30
53	252	306	1.4	1.6	F302_1130 EZ401U	450	800	112.8	3724/33	4000	4000	6500	1.0	11	6.0	22	31
64	209	254	1.3	1.9	F302_0940 EZ401U	450	800	93.64	4214/45	4000	4000	6500	1.1	11	6.0	22	31
85	157	191	1.2	2.3	F302_0700 EZ401U	450	800	70.36	2744/39	4000	4000	6500	1.2	11	6.0	22	31
85	232	300	1.8	1.6	F302_0700 EZ501U	450	800	70.36	2744/39	4000	4000	6500	3.2	11	6.0	22	32
85	239	334	1.9	1.5	F302_0700 EZ402U	450	800	70.36	2744/39	4000	4000	6500	1.9	11	6.0	22	32
106	126	153	1.2	2.7	F302_0560 EZ401U	450	800	56.49	4067/72	4000	4000	6500	1.3	11	6.0	22	31
106	186	241	1.8	1.8	F302_0560 EZ501U	450	800	56.49	4067/72	4000	4000	6500	3.3	11	6.0	22	32
106	192	268	1.8	1.8	F302_0560 EZ402U	450	800	56.49	4067/72	4000	4000	6500	2.0	11	6.0	22	32
127	105	128	1.2	3.0	F302_0470 EZ401U	390	800	47.19	1274/27	4000	4000	6500	1.4	11	6.0	22	31
127	156	201	1.7	2.0	F302_0470 EZ501U	450	800	47.19	1274/27	4000	4000	6500	3.4	11	6.0	22	32
127	160	224	1.8	2.0	F302_0470 EZ402U	450	800	47.19	1274/27	4000	4000	6500	2.1	11	6.0	22	32
F4 (n_{1N} = 2000 rpm, $M_{2acc,max}$ = 550 Nm)																	
344	246	373	7.1	1.5	F402_0058 EZ805U	550	1100	5.813	3784/651	2700	2700	4000	143	10	7.0	39	81
428	198	300	6.8	1.8	F402_0047 EZ805U	550	910	4.678	1408/301	2700	2700	4000	148	10	7.0	39	81
F4 (n_{1N} = 3000 rpm, $M_{2acc,max}$ = 700 Nm)																	
11	417	441	0.9	1.7	F403_2740 EZ302U	700	1400	274.4	59267/216	3800	3800	6000	0.36	10	6.0	39	42
14	333	352	0.8	2.1	F403_2190 EZ302U	700	1400	219.2	94705/432	3800	3800	6000	0.38	10	6.0	39	42
14	434	459	1.1	1.6	F403_2190 EZ303U	700	1400	219.2	94705/432	3800	3800	6000	0.49	10	6.0	39	42
16	279	295	0.8	2.5	F403_1840 EZ302U	700	1180	183.9	39715/216	3800	3800	6000	0.39	10	6.0	39	42
16	364	385	1.0	1.9	F403_1840 EZ303U	700	1180	183.9	39715/216	3800	3800	6000	0.50	10	6.0	39	42
16	492	527	1.3	1.4	F403_1840 EZ401U	700	1180	183.9	39715/216	3800	3800	6000	1.0	10	6.0	39	44
27	468	512	1.6	1.5	F402_1120 EZ501U	700	1400	112.3	1235/11	3800	3800	6000	3.1	10	5.0	39	40
32	389	426	1.5	1.8	F402_0930 EZ501U	700	1400	93.33	280/3	3800	3800	6000	3.2	10	5.0	39	40
43	292	319	1.3	2.4	F402_0700 EZ501U	700	1400	70.06	1261/18	3800	3800	6000	3.3	10	5.0	39	40
54	233	255	1.2	3.0	F402_0560 EZ501U	700	1400	55.97	2015/36	3800	3800	6000	3.5	10	5.0	39	40
54	402	434	2.0	1.7	F402_0560 EZ502U	700	1400	55.97	2015/36	3800	3800	6000	5.8	10	5.0	39	42
54	402	451	2.0	1.7	F402_0560 EZ701U	700	1400	55.97	2015/36	3800	3800	6000	9.1	10	5.0	39	44
64	196	214	1.1	3.4	F402_0470 EZ501U	700	1370	46.94	845/18	3800	3800	6000	3.7	10	5.0	39	40
64	337	364	1.9	2.0	F402_0470 EZ502U	700	1370	46.94	845/18	3800	3800	6000	6.0	10	5.0	39	42
64	337	378	1.9	2.0	F402_0470 EZ701U	700	1400	46.94	845/18	3800	3800	6000	9.3	10	5.0	39	44
64	442	505	2.5	1.5	F402_0470 EZ503U	700	1370	46.94	845/18	3800	3800	6000	8.4	10	5.0	39	43
86	252	282	1.8	2.4	F402_0350 EZ701U	680	1400	35.08	2210/63	3500	3500	5500	9.8	10	5.0	39	44
86	408	490	3.0	1.5	F402_0350 EZ702U	700	1400	35.08	2210/63	3500	3500	5500	15	10	5.0	39	46
107	201	225	1.8	2.8	F402_0280 EZ701U	540	1400	27.99	2015/72	3500	3500	5500	10	10	5.0	39	44
107	326	391	2.9	1.7	F402_0280 EZ702U	700	1400	27.99	2015/72	3500	3500	5500	16	10	5.0	39	46
107	366	434	3.2	1.5	F402_0280 EZ505U	700	1400	27.99	2015/72	3500	3500	5500	14	10	5.0	39	46
129	167	187	1.7	3.1	F402_0230 EZ701U	450	1400	23.21	325/14	3200	3200	4800	11	10	5.0	39	44
129	270	324	2.8	1.9	F402_0230 EZ702U	700	1400	23.21	325/14	3200	3200	4800	16	10	5.0	39	46
129	304	360	3.1	1.7	F402_0230 EZ505U	700	1400	23.21	325/14	3200	3200	4800	15	10	5.0	39	46
129	372	468	3.8	1.4	F402_0230 EZ703U	700	1400	23.21	325/14	3200	3200	4800	24	10	5.0	39	48
161	134	150	1.7	3.6	F402_0185 EZ701U	360	1360	18.62	3575/192	3200	3200	4800	12	10	5.0	39	44
161	217	260	2.7	2.2	F402_0185 EZ702U	700	1360	18.62	3575/192	3200	3200	4800	17	10	5.0	39	46
161	244	289	3.0	2.0	F402_0185 EZ505U	700	1360	18.62	3575/192	3200	3200	4800	15	10	5.0	39	46
161	298	376	3.7	1.6	F402_0185 EZ703U	700	1360	18.62	3575/192	3200	3200	4800	25	10	5.0	39	48
221	97	109	1.6	4.5	F402_0135 EZ701U	260	930	13.57	5984/441	3500	3500	5500	11	10	7.0	39	44
221	158	190	2.6	2.8	F402_0135 EZ702U	540	930	13.57	5984/441	3500	3500	5500	16	10	7.0	39	46
221	178	211	2.9	2.5	F402_0135 EZ505U	550	930	13.57	5984/441	3500	3500	5500	14	10	7.0	39	46
221	217	274	3.5	2.0	F402_0135 EZ703U	550	930	13.57	5984/441	3500	3500	5500	24	10	7.0	39	48
221	280	397	4.5	1.6	F402_0135 EZ705U	550	1100	13.57	5984/441	3500	3500	5500	36	10	7.0	39	54

n_{2N} [rpm]	M_{2N} [Nm]	$M_{2,0}$ [Nm]	a_{th}	S	Type	M_{2acc} [Nm]	M_{2NOT} [Nm]	i	i_{exakt}	n_{1maxDB} EL1,2,3,4 [rpm]	n_{1maxDB} EL5,6 [rpm]	n_{1maxZB} [rpm]	J_1 [kgcm²]	$\Delta\varphi_2$ [arcmin]	$\Delta\varphi_{2redII}$ [arcmin]	C_2 [Nm/ arcmin]	m [kg]
F4 (n_{1N} = 3000 rpm, $M_{2acc,max}$ = 700 Nm)																	
277	126	151	2.5	3.2	F402_0110 EZ702U	430	790	10.83	682/63	3500	3500	5500	17	10	7.0	39	46
277	142	168	2.8	2.9	F402_0110 EZ505U	550	790	10.83	682/63	3500	3500	5500	16	10	7.0	39	46
277	173	218	3.4	2.3	F402_0110 EZ703U	550	790	10.83	682/63	3500	3500	5500	25	10	7.0	39	48
277	224	317	4.4	1.8	F402_0110 EZ705U	550	1100	10.83	682/63	3500	3500	5500	37	10	7.0	39	54
277	234	390	4.6	1.7	F402_0110 EZ802U	550	1100	10.83	682/63	3500	3500	5500	61	10	7.0	39	62
334	105	125	2.4	3.6	F402_0090 EZ702U	360	650	8.980	440/49	3200	3200	4800	18	10	7.0	39	46
334	118	139	2.7	3.2	F402_0090 EZ505U	520	650	8.980	440/49	3200	3200	4800	17	10	7.0	39	46
334	144	181	3.3	2.6	F402_0090 EZ703U	520	650	8.980	440/49	3200	3200	4800	26	10	7.0	39	48
334	186	263	4.2	2.1	F402_0090 EZ705U	550	1100	8.980	440/49	3200	3200	4800	39	10	7.0	39	54
334	194	323	4.4	2.0	F402_0090 EZ802U	550	1100	8.980	440/49	3200	3200	4800	63	10	7.0	39	62
334	232	420	5.3	1.6	F402_0090 EZ803U	550	1100	8.980	440/49	3200	3200	4800	88	10	7.0	39	68
417	84	101	2.3	4.2	F402_0072 EZ702U	290	520	7.202	605/84	3200	3200	4800	21	10	7.0	39	46
417	94	112	2.6	3.7	F402_0072 EZ505U	420	520	7.202	605/84	3200	3200	4800	19	10	7.0	39	46
417	115	145	3.2	3.1	F402_0072 EZ703U	420	520	7.202	605/84	3200	3200	4800	29	10	7.0	39	48
417	149	211	4.1	2.4	F402_0072 EZ705U	550	1100	7.202	605/84	3200	3200	4800	41	10	7.0	39	54
417	156	259	4.3	2.3	F402_0072 EZ802U	550	1100	7.202	605/84	3200	3200	4800	65	10	7.0	39	62
417	186	337	5.1	1.9	F402_0072 EZ803U	550	1100	7.202	605/84	3200	3200	4800	90	10	7.0	39	68
516	120	170	3.9	2.7	F402_0058 EZ705U	550	1100	5.813	3784/651	2700	2700	4000	44	10	7.0	39	54
516	126	209	4.1	2.6	F402_0058 EZ802U	550	1100	5.813	3784/651	2700	2700	4000	68	10	7.0	39	62
516	150	272	4.9	2.2	F402_0058 EZ803U	550	1100	5.813	3784/651	2700	2700	4000	94	10	7.0	39	68
641	97	137	3.8	3.2	F402_0047 EZ705U	470	910	4.678	1408/301	2700	2700	4000	49	10	7.0	39	54
641	101	168	4.0	3.0	F402_0047 EZ802U	450	910	4.678	1408/301	2700	2700	4000	73	10	7.0	39	62
641	121	219	4.7	2.5	F402_0047 EZ803U	550	910	4.678	1408/301	2700	2700	4000	98	10	7.0	39	68
F4 (n_{1N} = 4500 rpm, $M_{2acc,max}$ = 700 Nm)																	
128	323	521	2.7	1.6	F402_0350 EZ505U	700	1400	35.08	2210/63	3500	3500	5500	13	10	5.0	39	46
161	258	415	2.6	1.9	F402_0280 EZ505U	700	1400	27.99	2015/72	3500	3500	5500	14	10	5.0	39	46
194	214	345	2.5	2.1	F402_0230 EZ505U	700	1400	23.21	325/14	3200	3200	4800	15	10	5.0	39	46
194	272	450	3.2	1.7	F402_0230 EZ703U	700	1400	23.21	325/14	3200	3200	4800	24	10	5.0	39	48
242	172	276	2.4	2.5	F402_0185 EZ505U	700	1360	18.62	3575/192	3200	3200	4800	15	10	5.0	39	46
242	219	361	3.1	1.9	F402_0185 EZ703U	700	1360	18.62	3575/192	3200	3200	4800	25	10	5.0	39	48
332	125	201	2.3	3.0	F402_0135 EZ505U	550	930	13.57	5984/441	3500	3500	5500	14	10	7.0	39	46
332	159	263	2.9	2.4	F402_0135 EZ703U	550	930	13.57	5984/441	3500	3500	5500	24	10	7.0	39	48
332	216	395	4.0	1.8	F402_0135 EZ705U	550	1100	13.57	5984/441	3500	3500	5500	36	10	7.0	39	54
416	100	161	2.2	3.5	F402_0110 EZ505U	550	790	10.83	682/63	3500	3500	5500	16	10	7.0	39	46
416	110	362	2.5	3.2	F402_0110 EZ802U	550	1100	10.83	682/63	3500	3500	5500	61	10	7.0	39	62
416	127	210	2.8	2.8	F402_0110 EZ703U	550	790	10.83	682/63	3500	3500	5500	25	10	7.0	39	48
416	172	315	3.8	2.1	F402_0110 EZ705U	550	1100	10.83	682/63	3500	3500	5500	37	10	7.0	39	54
501	83	133	2.2	4.0	F402_0090 EZ505U	520	650	8.980	440/49	3200	3200	4800	17	10	7.0	39	46
501	91	301	2.4	3.6	F402_0090 EZ802U	550	1100	8.980	440/49	3200	3200	4800	63	10	7.0	39	62
501	105	174	2.8	3.2	F402_0090 EZ703U	520	650	8.980	440/49	3200	3200	4800	26	10	7.0	39	48
501	143	261	3.7	2.3	F402_0090 EZ705U	550	1100	8.980	440/49	3200	3200	4800	39	10	7.0	39	54
625	66	107	2.1	4.7	F402_0072 EZ505U	420	520	7.202	605/84	3200	3200	4800	19	10	7.0	39	46
625	73	241	2.3	4.2	F402_0072 EZ802U	550	1100	7.202	605/84	3200	3200	4800	65	10	7.0	39	62
625	85	140	2.7	3.7	F402_0072 EZ703U	420	520	7.202	605/84	3200	3200	4800	29	10	7.0	39	48
625	115	210	3.6	2.7	F402_0072 EZ705U	550	1100	7.202	605/84	3200	3200	4800	41	10	7.0	39	54
F4 (n_{1N} = 6000 rpm, $M_{2acc,max}$ = 700 Nm)																	
22	393	441	0.9	1.8	F403_2740 EZ302U	700	1400	274.4	59267/216	3800	3800	6000	0.36	10	6.0	39	42
27	314	352	0.8	2.2	F403_2190 EZ302U	700	1400	219.2	94705/432	3800	3800	6000	0.38	10	6.0	39	42
27	411	472	1.0	1.7	F403_2190 EZ303U	700	1400	219.2	94705/432	3800	3800	6000	0.49	10	6.0	39	42
33	264	295	0.8	2.5	F403_1840 EZ302U	700	1180	183.9	39715/216	3800	3800	6000	0.39	10	6.0	39	42
33	345	395	1.0	1.9	F403_1840 EZ303U	700	1180	183.9	39715/216	3800	3800	6000	0.50	10	6.0	39	42
33	404	492	1.2	1.7	F403_1840 EZ401U	700	1180	183.9	39715/216	3800	3800	6000	1.0	10	6.0	39	44
53	370	479	1.3	1.9	F402_1120 EZ501U	700	1400	112.3	1235/11	3800	3800	6000	3.1	10	5.0	39	40
64	308	398	1.3	2.1	F402_0930 EZ501U	700	1400	93.33	280/3	3800	3800	6000	3.2	10	5.0	39	40
86	231	299	1.2	2.6	F402_0700 EZ501U	700	1400	70.06	1261/18	3800	3800	6000	3.3	10	5.0	39	40
86	353	530	1.8	1.7	F402_0700 EZ502U	700	1400	70.06	1261/18	3800	3800	6000	5.6	10	5.0	39	42
86	353	537	1.8	1.7	F402_0700 EZ701U	700	1400	70.06	1261/18	3800	3800	6000	8.9	10	5.0	39	44
107	185	239	1.2	3.0	F402_0560 EZ501U	700	1400	55.97	2015/36	3800	3800	6000	3.5	10	5.0	39	40
107	282	423	1.8	2.0	F402_0560 EZ502U	700	1400	55.97	2015/36	3800	3800	6000	5.8	10	5.0	39	42
107	282	429	1.8	2.0	F402_0560 EZ701U	700	1400	55.97	2015/36	3800	3800	6000	9.1	10	5.0	39	44
128	155	200	1.1	3.4	F402_0470 EZ501U	700	1370	46.94	845/18	3800	3800	6000	3.7	10	5.0	39	40
128	237	355	1.7	2.2	F402_0470 EZ502U	700	1370	46.94	845/18	3800	3800	6000	6.0	10	5.0	39	42
128	237	360	1.7	2.2	F402_0470 EZ701U	700	1400	46.94	845/18	3800	3800	6000	9.3	10	5.0	39	44
128	282	483	2.0	1.9	F402_0470 EZ503U	700	1370	46.94	845/18	3800	3800	6000	8.4	10	5.0	39	43

n_{2N} [rpm]	M_{2N} [Nm]	$M_{2,0}$ [Nm]	a_{th}	S	Type	M_{2acc} [Nm]	M_{2NOT} [Nm]	i	i_{exakt}	n_{1maxDB} EL1,2,3,4 [rpm]	n_{1maxDB} EL5,6 [rpm]	n_{1maxZB} [rpm]	J_1 [kgcm²]	$\Delta\varphi_2$ [arcmin]	$\Delta\varphi_{2redII}$ [arcmin]	C_2 [Nm/arcmin]	m [kg]
F6 (n_{1N} = 2000 rpm, $M_{2acc,max}$ = 1000 Nm)																	
185	459	694	5.4	1.7	F602_0110 EZ805U	1000	1600	10.82	2077/192	3300	3300	5000	141	10	7.0	73	108
222	381	577	5.2	1.9	F602_0090 EZ805U	1000	1600	8.995	1943/216	2900	2900	4500	144	10	7.0	73	108
279	303	459	5.0	2.2	F602_0072 EZ805U	1000	1380	7.159	3551/496	2900	2900	4500	149	10	7.0	73	108
353	240	364	4.9	2.6	F602_0057 EZ805U	880	1100	5.673	1407/248	2500	2500	3500	157	10	7.0	73	108
440	193	291	4.7	3.0	F602_0045 EZ805U	710	880	4.546	1273/280	2500	2500	3500	169	10	7.0	73	108
F6 (n_{1N} = 3000 rpm, $M_{2acc,max}$ = 1100 Nm)																	
17	743	812	1.5	1.5	F603_1810 EZ501U	1100	2000	180.6	8671/48	3500	3500	5500	3.2	10	6.0	77	72
21	583	637	1.3	1.9	F602_1400 EZ501U	1100	2000	139.8	559/4	3500	3500	5500	3.2	10	5.0	77	67
27	468	512	1.2	2.4	F602_1120 EZ501U	1100	2000	112.2	9425/84	3500	3500	5500	3.3	10	5.0	77	67
32	389	426	1.1	2.8	F602_0930 EZ501U	1100	1870	93.33	280/3	3500	3500	5500	3.5	10	5.0	77	67
32	670	724	1.9	1.6	F602_0930 EZ502U	1100	1870	93.33	280/3	3500	3500	5500	5.8	10	5.0	77	69
32	670	751	1.9	1.6	F602_0930 EZ701U	1100	2000	93.33	280/3	3500	3500	5500	9.1	10	5.0	77	71
43	290	318	0.9	3.8	F602_0700 EZ501U	1080	1590	69.64	975/14	3500	3500	5500	3.9	10	5.0	77	67
43	500	540	1.6	2.2	F602_0700 EZ502U	1100	1590	69.64	975/14	3500	3500	5500	6.2	10	5.0	77	69
43	500	561	1.6	2.2	F602_0700 EZ701U	1100	2000	69.64	975/14	3500	3500	5500	9.5	10	5.0	77	71
43	655	750	2.1	1.7	F602_0700 EZ503U	1100	1590	69.64	975/14	3500	3500	5500	8.6	10	5.0	77	70
54	400	449	1.5	2.8	F602_0560 EZ701U	1080	2000	55.71	390/7	3500	3500	5500	10	10	5.0	77	71
54	649	778	2.4	1.7	F602_0560 EZ702U	1100	2000	55.71	390/7	3500	3500	5500	15	10	5.0	77	73
64	335	376	1.3	3.3	F602_0470 EZ701U	910	2000	46.72	1495/32	3500	3500	5500	10	10	5.0	77	71
64	544	653	2.2	2.0	F602_0470 EZ702U	1100	2000	46.72	1495/32	3500	3500	5500	16	10	5.0	77	73
64	612	725	2.4	1.8	F602_0470 EZ505U	1100	2000	46.72	1495/32	3500	3500	5500	14	10	5.0	77	73
85	253	283	1.3	4.0	F602_0350 EZ701U	680	2000	35.21	845/24	3300	3300	5000	11	10	5.0	77	71
85	410	492	2.1	2.4	F602_0350 EZ702U	1100	2000	35.21	845/24	3300	3300	5000	17	10	5.0	77	73
85	461	546	2.3	2.2	F602_0350 EZ505U	1100	2000	35.21	845/24	3300	3300	5000	15	10	5.0	77	73
85	564	710	2.8	1.8	F602_0350 EZ703U	1100	2000	35.21	845/24	3300	3300	5000	25	10	5.0	77	75
107	201	225	1.2	4.6	F602_0280 EZ701U	540	2000	27.99	2015/72	3300	3300	5000	13	10	5.0	77	71
107	326	391	2.0	2.9	F602_0280 EZ702U	1100	2000	27.99	2015/72	3300	3300	5000	18	10	5.0	77	73
107	366	434	2.2	2.5	F602_0280 EZ505U	1100	2000	27.99	2015/72	3300	3300	5000	16	10	5.0	77	73
107	448	565	2.7	2.1	F602_0280 EZ703U	1100	2000	27.99	2015/72	3300	3300	5000	26	10	5.0	77	75
107	578	820	3.5	1.6	F602_0280 EZ705U	1100	2000	27.99	2015/72	3300	3300	5000	38	10	5.0	77	81
129	271	325	1.9	3.2	F602_0230 EZ702U	930	1690	23.27	1885/81	2900	2900	4500	19	10	5.0	77	73
129	305	361	2.2	2.9	F602_0230 EZ505U	1100	1690	23.27	1885/81	2900	2900	4500	18	10	5.0	77	73
129	372	470	2.7	2.3	F602_0230 EZ703U	1100	1690	23.27	1885/81	2900	2900	4500	27	10	5.0	77	75
129	481	682	3.4	1.8	F602_0230 EZ705U	1100	2000	23.27	1885/81	2900	2900	4500	39	10	5.0	77	81
129	503	837	3.6	1.7	F602_0230 EZ802U	1100	2000	23.27	1885/81	2900	2900	4500	63	10	5.0	77	89
162	383	543	3.3	2.1	F602_0185 EZ705U	1100	2000	18.52	3445/186	2900	2900	4500	42	10	5.0	77	81
162	401	667	3.5	2.0	F602_0185 EZ802U	1100	2000	18.52	3445/186	2900	2900	4500	66	10	5.0	77	89
220	158	190	1.8	4.6	F602_0135 EZ702U	540	920	13.61	871/64	3300	3300	5000	19	10	7.0	73	73
220	178	211	2.0	4.1	F602_0135 EZ505U	740	920	13.61	871/64	3300	3300	5000	18	10	7.0	73	73
220	218	275	2.4	3.4	F602_0135 EZ703U	740	920	13.61	871/64	3300	3300	5000	27	10	7.0	73	75
220	281	399	3.1	2.6	F602_0135 EZ705U	1000	1600	13.61	871/64	3300	3300	5000	39	10	7.0	73	81
220	294	490	3.3	2.5	F602_0135 EZ802U	1000	1600	13.61	871/64	3300	3300	5000	63	10	7.0	73	89
220	351	636	3.9	2.1	F602_0135 EZ803U	1000	1600	13.61	871/64	3300	3300	5000	89	10	7.0	73	95
277	142	168	2.1	4.4	F602_0110 EZ505U	630	790	10.82	2077/192	3300	3300	5000	20	10	7.0	73	73
277	173	218	2.5	3.6	F602_0110 EZ703U	630	790	10.82	2077/192	3300	3300	5000	30	10	7.0	73	75
277	224	317	3.0	3.0	F602_0110 EZ705U	1000	1600	10.82	2077/192	3300	3300	5000	42	10	7.0	73	81
277	234	389	3.2	2.9	F602_0110 EZ802U	1000	1600	10.82	2077/192	3300	3300	5000	66	10	7.0	73	89
277	279	506	3.8	2.4	F602_0110 EZ803U	1000	1600	10.82	2077/192	3300	3300	5000	91	10	7.0	73	95
334	118	140	2.3	4.4	F602_0090 EZ505U	520	650	8.995	1943/216	2900	2900	4500	23	10	7.0	73	73
334	144	181	2.8	3.6	F602_0090 EZ703U	520	650	8.995	1943/216	2900	2900	4500	33	10	7.0	73	75
334	186	264	2.9	3.4	F602_0090 EZ705U	910	1600	8.995	1943/216	2900	2900	4500	45	10	7.0	73	81
334	195	324	3.1	3.3	F602_0090 EZ802U	870	1600	8.995	1943/216	2900	2900	4500	69	10	7.0	73	89
334	232	421	3.7	2.7	F602_0090 EZ803U	1000	1600	8.995	1943/216	2900	2900	4500	94	10	7.0	73	95
419	148	210	2.8	4.0	F602_0072 EZ705U	720	1380	7.159	3551/496	2900	2900	4500	50	10	7.0	73	81
419	155	258	2.9	3.8	F602_0072 EZ802U	690	1380	7.159	3551/496	2900	2900	4500	74	10	7.0	73	89
419	185	335	3.5	3.2	F602_0072 EZ803U	1000	1380	7.159	3551/496	2900	2900	4500	100	10	7.0	73	95
529	117	166	2.7	4.7	F602_0057 EZ705U	570	1100	5.673	1407/248	2500	2500	3500	58	10	7.0	73	81
529	123	204	2.8	4.4	F602_0057 EZ802U	550	1100	5.673	1407/248	2500	2500	3500	82	10	7.0	73	89
529	146	265	3.4	3.7	F602_0057 EZ803U	800	1100	5.673	1407/248	2500	2500	3500	108	10	7.0	73	95
660	117	213	3.3	4.3	F602_0045 EZ803U	640	880	4.546	1273/280	2500	2500	3500	120	10	7.0	73	95
F6 (n_{1N} = 4500 rpm, $M_{2acc,max}$ = 1100 Nm)																	
81	513	827	2.0	2.0	F602_0560 EZ505U	1100	2000	55.71	390/7	3500	3500	5500	14	10	5.0	77	73
96	431	693	2.0	2.2	F602_0470 EZ505U	1100	2000	46.72	1495/32	3500	3500	5500	14	10	5.0	77	73
128	324	523	1.9	2.7	F602_0350 EZ505U	1100	2000	35.21	845/24	3300	3300	5000	15	10	5.0	77	73

n_{2N} [rpm]	M_{2N} [Nm]	$M_{2,0}$ [Nm]	a_{th}	S	Type	M_{2acc} [Nm]	M_{2NOT} [Nm]	i	i_{exakt}	n_{1maxDB} EL1,2,3,4 [rpm]	n_{1maxDB} EL5,6 [rpm]	n_{1maxZB} [rpm]	J_1 [kgcm²]	$\Delta\varphi_2$ [arcmin]	$\Delta\varphi_{2redII}$ [arcmin]	C_2 [Nm/arcmin]	m [kg]
F6 (n_{1N} = 4500 rpm, $M_{2acc,max}$ = 1100 Nm)																	
128	413	683	2.4	2.1	F602_0350 EZ703U	1100	2000	35.21	845/24	3300	3300	5000	25	10	5.0	77	75
161	258	415	1.8	3.1	F602_0280 EZ505U	1100	2000	27.99	2015/72	3300	3300	5000	16	10	5.0	77	73
161	328	543	2.3	2.5	F602_0280 EZ703U	1100	2000	27.99	2015/72	3300	3300	5000	26	10	5.0	77	75
161	445	814	3.1	1.8	F602_0280 EZ705U	1100	2000	27.99	2015/72	3300	3300	5000	38	10	5.0	77	81
193	214	345	1.7	3.6	F602_0230 EZ505U	1100	1690	23.27	1885/81	2900	2900	4500	18	10	5.0	77	73
193	237	779	1.9	3.2	F602_0230 EZ802U	1100	2000	23.27	1885/81	2900	2900	4500	63	10	5.0	77	89
193	273	451	2.2	2.8	F602_0230 EZ703U	1100	1690	23.27	1885/81	2900	2900	4500	27	10	5.0	77	75
193	370	677	3.0	2.1	F602_0230 EZ705U	1100	2000	23.27	1885/81	2900	2900	4500	39	10	5.0	77	81
243	189	620	1.9	3.7	F602_0185 EZ802U	1100	2000	18.52	3445/186	2900	2900	4500	66	10	5.0	77	89
243	295	539	2.9	2.4	F602_0185 EZ705U	1100	2000	18.52	3445/186	2900	2900	4500	42	10	5.0	77	81
331	139	455	1.8	4.6	F602_0135 EZ802U	1000	1600	13.61	871/64	3300	3300	5000	63	10	7.0	73	89
331	160	264	2.0	4.0	F602_0135 EZ703U	740	920	13.61	871/64	3300	3300	5000	27	10	7.0	73	75
331	216	396	2.8	2.9	F602_0135 EZ705U	1000	1600	13.61	871/64	3300	3300	5000	39	10	7.0	73	81
416	127	210	2.0	4.7	F602_0110 EZ703U	630	790	10.82	2077/192	3300	3300	5000	30	10	7.0	73	75
416	172	315	2.7	3.4	F602_0110 EZ705U	1000	1600	10.82	2077/192	3300	3300	5000	42	10	7.0	73	81
500	106	175	2.0	5.0	F602_0090 EZ703U	520	650	8.995	1943/216	2900	2900	4500	33	10	7.0	73	75
500	143	262	2.6	3.9	F602_0090 EZ705U	910	1600	8.995	1943/216	2900	2900	4500	45	10	7.0	73	81
629	114	208	2.5	4.5	F602_0072 EZ705U	720	1380	7.159	3551/496	2900	2900	4500	50	10	7.0	73	81

8.3 Dimensional drawings

In this chapter you can find the dimensions of the geared motors.

There is a dimensional drawing for every possible shaft/housing design, each with the tables for gear unit dimensions, motor dimensions and geared motor dimensions.

Dimensions can exceed the specifications of ISO 2768-mK due to casting tolerances or accumulation of individual tolerances.

We reserve the right to make dimensional changes due to ongoing technical development.

You can download 3D models of our standard drives at http://configurator.stoeber.de.

Combination options and the dimensions of forced ventilated geared motors can also be found at http://configurator.stoeber.de.

Tolerances

Axis height in accordance with DIN 747	Tolerance
Up to 50 mm	-0.4 mm
Up to 250 mm	-0.5 mm
Up to 630 mm	-0.6 mm

Solid shaft	Tolerance
Shaft ∅ fit ≤ 50 mm	DIN 748-1, ISO k6
Shaft ∅ fit > 50 mm	DIN 748-1, ISO m6
Feather keys	DIN 6885-1, high form A

Hollow shaft	Tolerance
Hollow shaft hole fit	ISO H7
Feather keys	DIN 6885-1, high form

Flange	Pilot tolerance
Up to 300 mm	ISO j6
Starting at 350 mm	ISO h6

Centering holes in solid shafts in accordance with DIN 332-2, DR shape

Thread size	M4	M5	M6	M8	M10	M12	M16	M20	M24
Thread depth [mm]	10	12.5	16	19	22	28	36	42	50

8.3.1 A shaft design (hollow shaft), G housing design (pitch circle diameter)

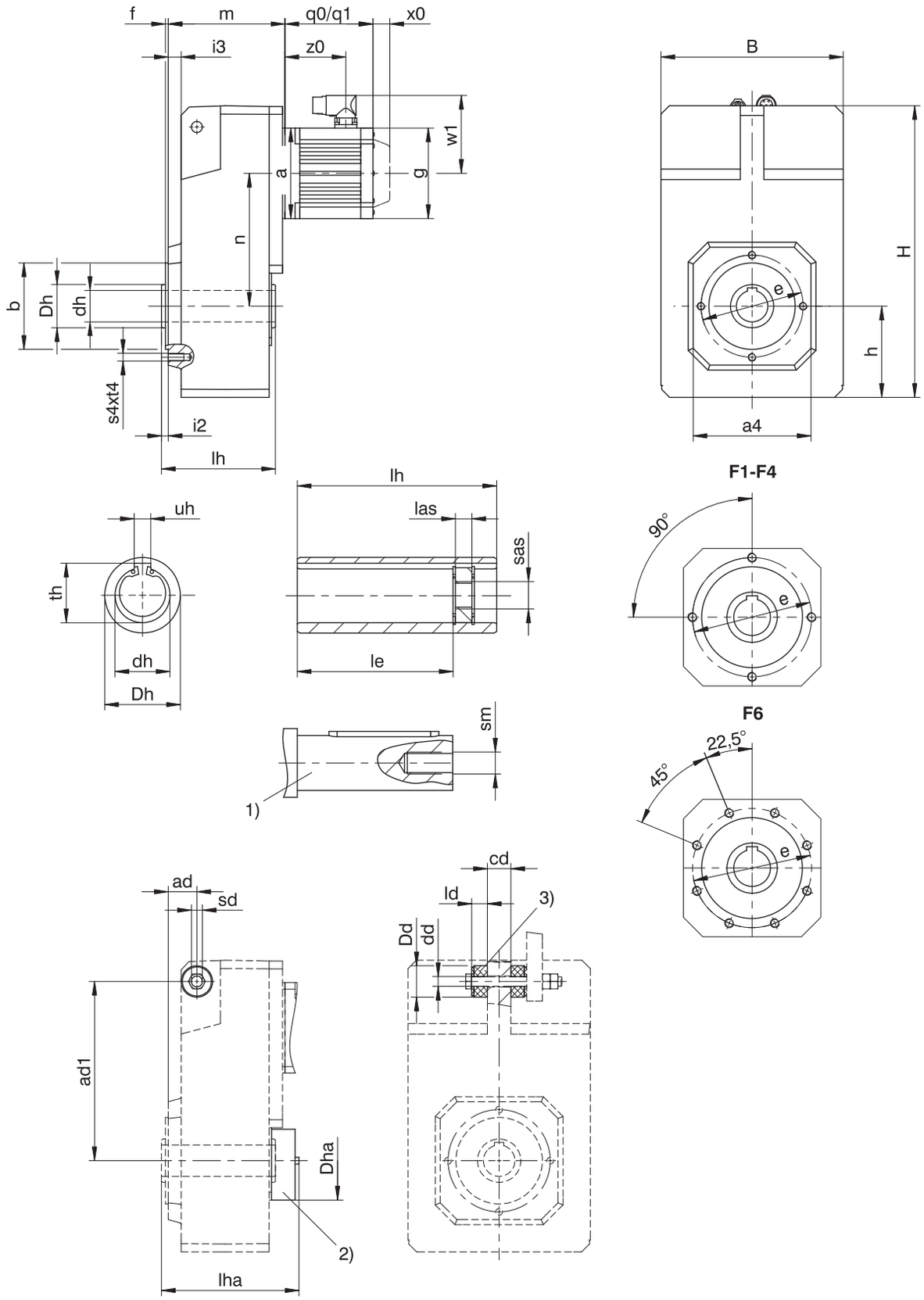

q0	Applies to motors without brake.	q1	Applies to motors with brake.
x0	Applies to encoders using an optical measuring method.	w1	Different for the One Cable Solution (OCS), see the chapter [▸ 17.4]
1)	The length of the machine shaft must be at least 2.2 x ∅dh and the length of the feather key must be at least 2 x ∅dh.	2)	Cover (optional)

3) Rubber buffer for torque arm bracket (optional). Dimension ∅Dd = outer∅ of the rubber buffer when not tensioned.

Dimensions of gear units

Type	□a4	ad	ad1	Øb	B	cd	Ødd	Ødh	ØDd	ØDh	ØDha	Øe	f	h	H	i2	i3	ld	le	lh	las	lha	s4	sd	sm	sas	t4	th	uh
F1	100	29.5	150	70_{j6}	145	20	$11.0^{+0,5}$	20^{H7}	30	35	70	85	2.5	74	238.0	6.5	12.5	15	73	95	12	112.0	M8	M10	M6	M8	13	22.8	6^{JS9}
F2	130	33.0	181	95_{j6}	180	22	$11.0^{+0,5}$	25^{H7}	30	45	82	115	3.0	93	299.0	8.0	15.0	15	92	115	12	130.5	M8	M10	M10	M12	13	28.3	8^{JS9}
F3	150	38.5	205	110_{j6}	206	30	$14.0^{+0,5}$	30^{H7}	37	50	88	130	3.5	106	335.5	8.5	16.5	20	103	130	12	155.5	M10	M12	M10	M12	16	33.3	8^{JS9}
F4	150	38.5	228	110_{j6}	230	30	$14.0^{+0,5}$	40^{H7}	37	55	100	130	3.5	116	370.0	8.5	16.5	20	114	145	12	174.5	M10	M12	M16	M20	16	43.3	12^{JS9}
F6	180	44.5	270	130_{j6}	265	35	$22.0^{+0,5}$	50^{H7}	60	70	115	165	3.5	137	433.0	10.5	20.5	30	143	180	12	192.5	M10	M20	M16	M20	16	53.8	14^{JS9}

Dimensions of motors

Type	□g	q0	q1	w1	x0	z0
EZ301U	72	114.0	154.0	55.5	21	78.5
EZ302U	72	136.0	176.0	55.5	21	100.5
EZ303U	72	158.0	198.0	55.5	21	122.5
EZ401U	98	118.5	167.0	91.0	22	76.5
EZ402U	98	143.5	192.0	91.0	22	101.5
EZ404U	98	193.5	242.0	91.0	22	151.5
EZ501U	115	112.0	166.5	100.0	22	77.5
EZ502U	115	137.0	191.5	100.0	22	102.5
EZ503U	115	162.0	216.5	100.0	22	127.5
EZ505U	115	212.0	266.5	100.0	22	177.5
EZ701U	145	125.0	184.0	115.0	22	87.0
EZ702U	145	150.0	209.0	115.0	22	112.0
EZ703U	145	175.0	234.0	115.0	22	137.0
EZ705U	145	230.0	289.0	134.0	22	188.0
EZ802U	190	232.5	309.5	156.5	22	178.5
EZ803U	190	273.5	350.5	156.5	22	219.5
EZ805U	190	355.5	432.5	156.5	22	301.5

Dimensions of geared motors

Type	EZ3			EZ4			EZ5			EZ7			EZ8		
	a	m	n	a	m	n	a	m	n	a	m	n	a	m	n
F102	□72	97.5	102.0	□98	97.5	102.0	□115	101.5	102.0	□145	103.5	102.0	–	–	–
F202	□72	115.0	131.0	□98	115.0	131.0	□115	119.0	131.0	□145	121.0	131.0	–	–	–
F203	∅140	152.0	131.0	–	–	–	–	–	–	–	–	–	–	–	–
F302	∅140	129.5	149.5	∅140	129.5	149.5	□115	133.5	149.5	□145	135.5	149.5	–	–	–
F303	∅140	166.5	149.5	–	–	–	–	–	–	–	–	–	–	–	–
F402	–	–	–	–	–	–	∅160	148.5	169.0	□145	150.5	169.0	□190	153.5	169.0
F403	∅140	181.5	169.0	∅140	181.5	169.0	–	–	–	–	–	–	–	–	–
F602	–	–	–	–	–	–	∅160	179.5	196.0	□145	181.5	196.0	□190	184.5	196.0
F603	–	–	–	–	–	–	∅160	222.5	196.0	–	–	–	–	–	–

8.3.2 A shaft design (hollow shaft), GN housing design (pitch circle diameter + side fastening)

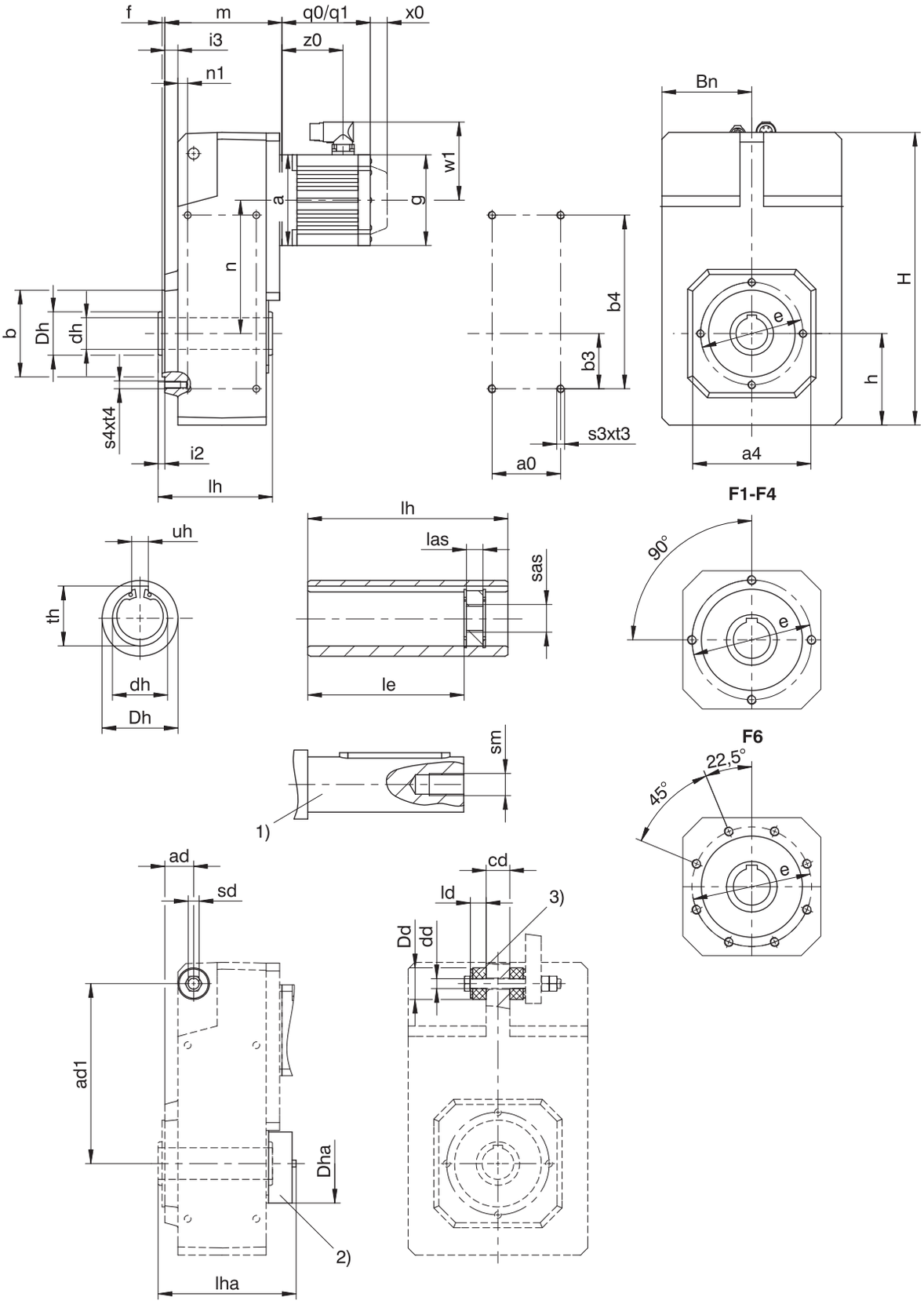

q0	Applies to motors without brake.	q1	Applies to motors with brake.
x0	Applies to encoders using an optical measuring method.	w1	Different for the One Cable Solution (OCS), see the chapter [▶ 17.4]
1)	The length of the machine shaft must be at least 2.2 x ∅dh and the length of the feather key must be at least 2 x ∅dh.	2)	Cover (optional)

3) Rubber buffer for torque arm bracket (optional). Dimension ∅Dd = outer∅ of the rubber buffer when not tensioned.

Dimensions of gear units

Type	a0	□a4	ad	ad1	Øb	b3	b4	Bn	cd	Ødd	Ødh	ØDd	ØDh	ØDha	Øe	f	h	H
F1	50	100	29.5	150	70_{j6}	40	140	71	20	$11.0^{+0,5}$	20^{H7}	30	35	70	85	2.5	74	238.0
F2	64	130	33.0	181	95_{j6}	55	175	88	22	$11.0^{+0,5}$	25^{H7}	30	45	82	115	3.0	93	299.0
F3	72	150	38.5	205	110_{j6}	60	200	102	30	$14.0^{+0,5}$	30^{H7}	37	50	88	130	3.5	106	335.5
F4	87	150	38.5	228	110_{j6}	70	220	114	30	$14.0^{+0,5}$	40^{H7}	37	55	100	130	3.5	116	370.0
F6	108	180	44.5	270	130_{j6}	85	270	131	35	$22.0^{+0,5}$	50^{H7}	60	70	115	165	3.5	137	433.0

Type	i2	i3	ld	le	lh	las	lha	n1	s3	s4	sd	sm	sas	t3	t4	th	uh
F1	6.5	12.5	15	73	95	12	112.0	10.0	M6	M8	M10	M6	M8	11	13	22.8	6^{JS9}
F2	8.0	15.0	15	92	115	12	130.5	10.5	M8	M8	M10	M10	M12	13	13	28.3	8^{JS9}
F3	8.5	16.5	20	103	130	12	155.5	12.5	M10	M10	M12	M10	M12	16	16	33.3	8^{JS9}
F4	8.5	16.5	20	114	145	12	174.5	12.5	M10	M10	M12	M16	M20	16	16	43.3	12^{JS9}
F6	10.5	20.5	30	143	180	12	192.5	15.5	M12	M10	M20	M16	M20	19	16	53.8	14^{JS9}

Dimensions of motors

Type	□g	q0	q1	w1	x0	z0
EZ301U	72	114.0	154.0	55.5	21	78.5
EZ302U	72	136.0	176.0	55.5	21	100.5
EZ303U	72	158.0	198.0	55.5	21	122.5
EZ401U	98	118.5	167.0	91.0	22	76.5
EZ402U	98	143.5	192.0	91.0	22	101.5
EZ404U	98	193.5	242.0	91.0	22	151.5
EZ501U	115	112.0	166.5	100.0	22	77.5
EZ502U	115	137.0	191.5	100.0	22	102.5
EZ503U	115	162.0	216.5	100.0	22	127.5
EZ505U	115	212.0	266.5	100.0	22	177.5
EZ701U	145	125.0	184.0	115.0	22	87.0
EZ702U	145	150.0	209.0	115.0	22	112.0
EZ703U	145	175.0	234.0	115.0	22	137.0
EZ705U	145	230.0	289.0	134.0	22	188.0
EZ802U	190	232.5	309.5	156.5	22	178.5
EZ803U	190	273.5	350.5	156.5	22	219.5
EZ805U	190	355.5	432.5	156.5	22	301.5

Dimensions of geared motors

Type	EZ3			EZ4			EZ5			EZ7			EZ8		
	a	m	n	a	m	n	a	m	n	a	m	n	a	m	n
F102	□72	97.5	102.0	□98	97.5	102.0	□115	101.5	102.0	□145	103.5	102.0	–	–	–
F202	□72	115.0	131.0	□98	115.0	131.0	□115	119.0	131.0	□145	121.0	131.0	–	–	–
F203	∅140	152.0	131.0	–	–	–	–	–	–	–	–	–	–	–	–
F302	∅140	129.5	149.5	∅140	129.5	149.5	□115	133.5	149.5	□145	135.5	149.5	–	–	–
F303	∅140	166.5	149.5	–	–	–	–	–	–	–	–	–	–	–	–
F402	–	–	–	–	–	–	∅160	148.5	169.0	□145	150.5	169.0	□190	153.5	169.0
F403	∅140	181.5	169.0	∅140	181.5	169.0	–	–	–	–	–	–	–	–	–
F602	–	–	–	–	–	–	∅160	179.5	196.0	□145	181.5	196.0	□190	184.5	196.0
F603	–	–	–	–	–	–	∅160	222.5	196.0	–	–	–	–	–	–

8.3.3 A shaft design (hollow shaft), F housing design (round flange)

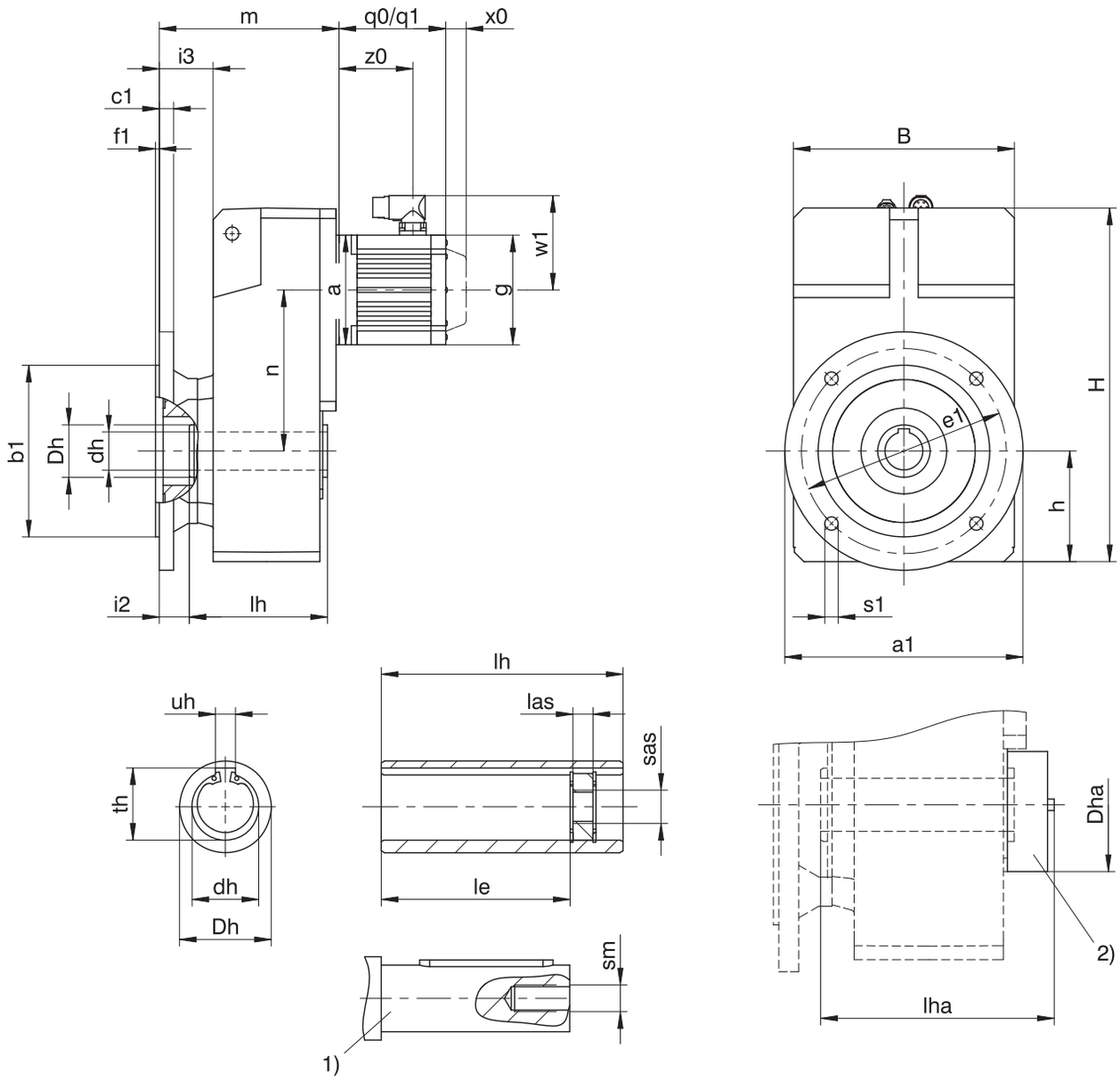

q0	Applies to motors without brake.	q1	Applies to motors with brake.
x0	Applies to encoders using an optical measuring method.	w1	Different for the One Cable Solution (OCS), see the chapter [▸ 17.4]
1)	The length of the machine shaft must be at least 2.2 x ∅dh and the length of the feather key must be at least 2 x ∅dh.	2)	Cover (optional)

Dimensions of gear units

Type	Øa1	Øb1	B	c1	Ødh	ØDh	ØDha	Øe1	f1	h	H	i2	i3	le	lh	las	lha	Øs1	sm	sas	th	uh
F1	160	110_{j6}	145	10	20^{H7}	35	70	130	3.5	74	238.0	25.5	44.5	73	95	12	112.0	9	M6	M8	22.8	6^{JS9}
F2	200	130_{j6}	180	14	25^{H7}	45	82	165	3.5	93	299.0	30.0	53.0	92	115	12	130.5	11	M10	M12	28.3	8^{JS9}
F3	250	180_{j6}	206	15	30^{H7}	50	88	215	4.0	106	335.5	31.5	56.5	103	130	12	155.5	14	M10	M12	33.3	8^{JS9}
F4	250	180_{j6}	230	15	40^{H7}	55	100	215	4.0	116	370.0	31.5	56.5	114	145	12	174.5	14	M16	M20	43.3	12^{JS9}
F6	300	230_{j6}	265	17	50^{H7}	70	115	265	4.0	137	433.0	29.5	60.5	143	180	12	192.5	14	M16	M20	53.8	14^{JS9}

Dimensions of motors

Type	□g	q0	q1	w1	x0	z0
EZ301U	72	114.0	154.0	55.5	21	78.5
EZ302U	72	136.0	176.0	55.5	21	100.5
EZ303U	72	158.0	198.0	55.5	21	122.5
EZ401U	98	118.5	167.0	91.0	22	76.5
EZ402U	98	143.5	192.0	91.0	22	101.5
EZ404U	98	193.5	242.0	91.0	22	151.5
EZ501U	115	112.0	166.5	100.0	22	77.5
EZ502U	115	137.0	191.5	100.0	22	102.5
EZ503U	115	162.0	216.5	100.0	22	127.5
EZ505U	115	212.0	266.5	100.0	22	177.5
EZ701U	145	125.0	184.0	115.0	22	87.0
EZ702U	145	150.0	209.0	115.0	22	112.0
EZ703U	145	175.0	234.0	115.0	22	137.0
EZ705U	145	230.0	289.0	134.0	22	188.0
EZ802U	190	232.5	309.5	156.5	22	178.5
EZ803U	190	273.5	350.5	156.5	22	219.5
EZ805U	190	355.5	432.5	156.5	22	301.5

Dimensions of geared motors

Type	EZ3			EZ4			EZ5			EZ7			EZ8		
	a	m	n	a	m	n	a	m	n	a	m	n	a	m	n
F102	□72	129.5	102.0	□98	129.5	102.0	□115	133.5	102.0	□145	135.5	102.0	–	–	–
F202	□72	153.0	131.0	□98	153.0	131.0	□115	157.0	131.0	□145	159.0	131.0	–	–	–
F203	∅140	190.0	131.0	–	–	–	–	–	–	–	–	–	–	–	–
F302	∅140	169.5	149.5	∅140	169.5	149.5	□115	173.5	149.5	□145	175.5	149.5	–	–	–
F303	∅140	206.5	149.5	–	–	–	–	–	–	–	–	–	–	–	–
F402	–	–	–	–	–	–	∅160	188.5	169.0	□145	190.5	169.0	□190	193.5	169.0
F403	∅140	221.5	169.0	∅140	221.5	169.0	–	–	–	–	–	–	–	–	–
F602	–	–	–	–	–	–	∅160	219.5	196.0	□145	221.5	196.0	□190	224.5	196.0
F603	–	–	–	–	–	–	∅160	262.5	196.0	–	–	–	–	–	–

8.3.4 A shaft design (hollow shaft), Q housing design (square flange)

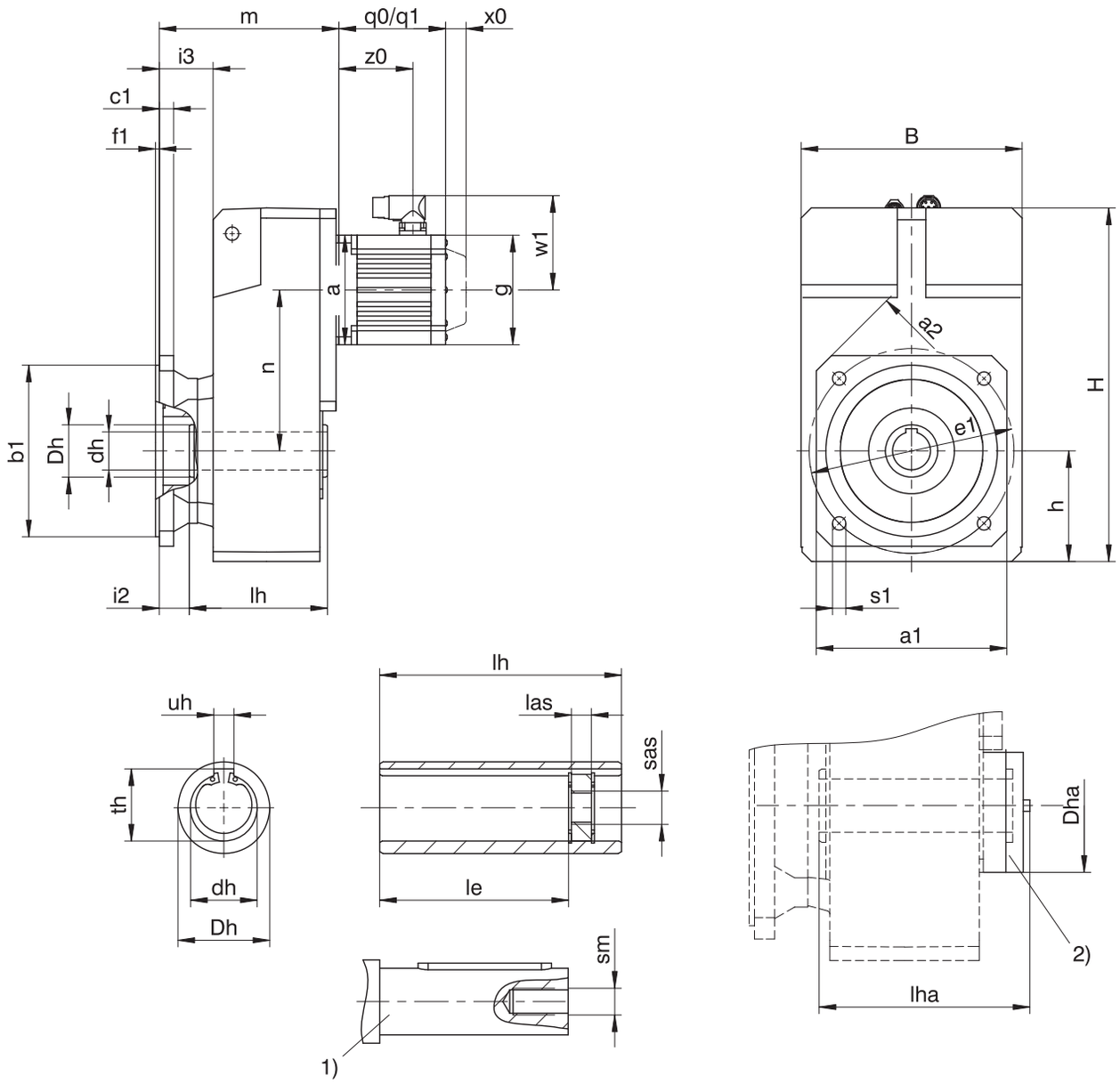

q0	Applies to motors without brake.	q1	Applies to motors with brake.
x0	Applies to encoders using an optical measuring method.	w1	Different for the One Cable Solution (OCS), see the chapter [▸ 17.4]
1)	The length of the machine shaft must be at least 2.2 x ∅dh and the length of the feather key must be at least 2 x ∅dh.	2)	Cover (optional)

Dimensions of gear units

Type	□a1	□a2	Øb1	B	c1	Ødh	ØDh	ØDha	Øe1	f1	h	H	i2	i3	le	lh	las	lha	Øs1	sm	sas	th	uh
F1	125	160	110_{j6}	145	10	20^{H7}	35	70	130	3.5	74	238.0	25.5	44.5	73	95	12	112.0	9	M6	M8	22.8	6^{JS9}
F2	150	195	130_{j6}	180	14	25^{H7}	45	82	165	3.5	93	299.0	30.0	53.0	92	115	12	130.5	11	M10	M12	28.3	8^{JS9}
F3	200	260	180_{j6}	206	15	30^{H7}	50	88	215	4.0	106	335.5	31.5	56.5	103	130	12	155.5	14	M10	M12	33.3	8^{JS9}
F4	200	260	180_{j6}	230	15	40^{H7}	55	100	215	4.0	116	370.0	31.5	56.5	114	145	12	174.5	14	M16	M20	43.3	12^{JS9}
F6	250	325	230_{j6}	265	17	50^{H7}	70	115	265	4.0	137	433.0	29.5	60.5	143	180	12	192.5	14	M16	M20	53.8	14^{JS9}

Dimensions of motors

Type	□g	q0	q1	w1	x0	z0
EZ301U	72	114.0	154.0	55.5	21	78.5
EZ302U	72	136.0	176.0	55.5	21	100.5
EZ303U	72	158.0	198.0	55.5	21	122.5
EZ401U	98	118.5	167.0	91.0	22	76.5
EZ402U	98	143.5	192.0	91.0	22	101.5
EZ404U	98	193.5	242.0	91.0	22	151.5
EZ501U	115	112.0	166.5	100.0	22	77.5
EZ502U	115	137.0	191.5	100.0	22	102.5
EZ503U	115	162.0	216.5	100.0	22	127.5
EZ505U	115	212.0	266.5	100.0	22	177.5
EZ701U	145	125.0	184.0	115.0	22	87.0
EZ702U	145	150.0	209.0	115.0	22	112.0
EZ703U	145	175.0	234.0	115.0	22	137.0
EZ705U	145	230.0	289.0	134.0	22	188.0
EZ802U	190	232.5	309.5	156.5	22	178.5
EZ803U	190	273.5	350.5	156.5	22	219.5
EZ805U	190	355.5	432.5	156.5	22	301.5

Dimensions of geared motors

Type	EZ3			EZ4			EZ5			EZ7			EZ8		
	a	m	n	a	m	n	a	m	n	a	m	n	a	m	n
F102	□72	129.5	102.0	□98	129.5	102.0	□115	133.5	102.0	□145	135.5	102.0	–	–	–
F202	□72	153.0	131.0	□98	153.0	131.0	□115	157.0	131.0	□145	159.0	131.0	–	–	–
F203	∅140	190.0	131.0	–	–	–	–	–	–	–	–	–	–	–	–
F302	∅140	169.5	149.5	∅140	169.5	149.5	□115	173.5	149.5	□145	175.5	149.5	–	–	–
F303	∅140	206.5	149.5	–	–	–	–	–	–	–	–	–	–	–	–
F402	–	–	–	–	–	–	∅160	188.5	169.0	□145	190.5	169.0	□190	193.5	169.0
F403	∅140	221.5	169.0	∅140	221.5	169.0	–	–	–	–	–	–	–	–	–
F602	–	–	–	–	–	–	∅160	219.5	196.0	□145	221.5	196.0	□190	224.5	196.0
F603	–	–	–	–	–	–	∅160	262.5	196.0	–	–	–	–	–	–

8.3.5 V shaft design (solid shaft), F housing design (round flange)

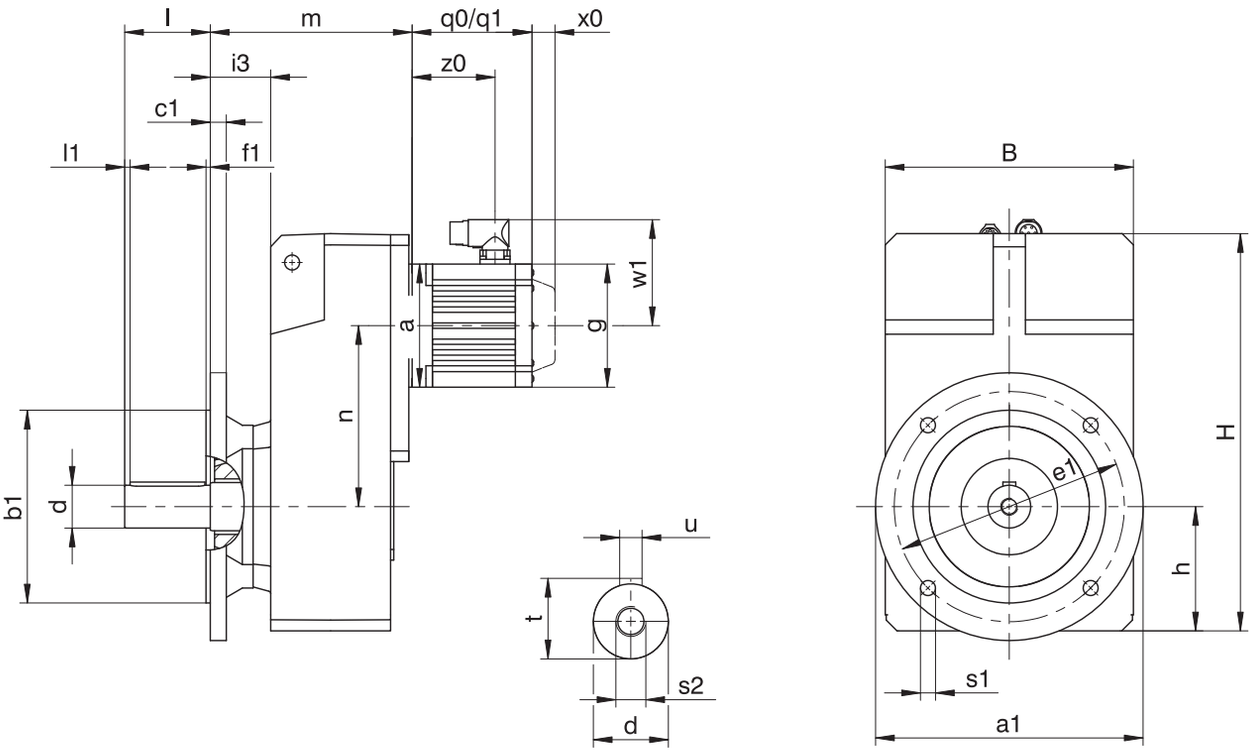

q0	Applies to motors without brake.	q1	Applies to motors with brake.
x0	Applies to encoders using an optical measuring method.	w1	Different for the One Cable Solution (OCS), see the chapter [▸ 17.4]

Dimensions of gear units

Type	Øa1	Øb1	B	c1	Ød	Øe1	f1	h	H	i3	l	l1	Øs1	s2	t	u
F1	160	110_{j6}	145	10	25_{k6}	130	3.5	74	238.0	44.5	50	5	9	M10	28.0	A8×7×40
F2	200	130_{j6}	180	14	30_{k6}	165	3.5	93	299.0	53.0	60	5	11	M10	33.0	A8×7×50
F3	250	180_{j6}	206	15	35_{k6}	215	4.0	106	335.5	56.5	70	5	14	M12	38.0	A10×8×60
F4	250	180_{j6}	230	15	40_{k6}	215	4.0	116	370.0	56.5	80	5	14	M16	43.0	A12×8×70
F6	300	230_{j6}	265	17	50_{k6}	265	4.0	137	433.0	60.5	100	5	14	M16	53.5	A14×9×90

Dimensions of motors

Type	□g	q0	q1	w1	x0	z0
EZ301U	72	114.0	154.0	55.5	21	78.5
EZ302U	72	136.0	176.0	55.5	21	100.5
EZ303U	72	158.0	198.0	55.5	21	122.5
EZ401U	98	118.5	167.0	91.0	22	76.5
EZ402U	98	143.5	192.0	91.0	22	101.5
EZ404U	98	193.5	242.0	91.0	22	151.5
EZ501U	115	112.0	166.5	100.0	22	77.5
EZ502U	115	137.0	191.5	100.0	22	102.5
EZ503U	115	162.0	216.5	100.0	22	127.5
EZ505U	115	212.0	266.5	100.0	22	177.5
EZ701U	145	125.0	184.0	115.0	22	87.0
EZ702U	145	150.0	209.0	115.0	22	112.0
EZ703U	145	175.0	234.0	115.0	22	137.0
EZ705U	145	230.0	289.0	134.0	22	188.0
EZ802U	190	232.5	309.5	156.5	22	178.5
EZ803U	190	273.5	350.5	156.5	22	219.5
EZ805U	190	355.5	432.5	156.5	22	301.5

Dimensions of geared motors

Type	EZ3			EZ4			EZ5			EZ7			EZ8		
	a	m	n	a	m	n	a	m	n	a	m	n	a	m	n
F102	□72	129.5	102.0	□98	129.5	102.0	□115	133.5	102.0	□145	135.5	102.0	–	–	–
F202	□72	153.0	131.0	□98	153.0	131.0	□115	157.0	131.0	□145	159.0	131.0	–	–	–
F203	∅140	190.0	131.0	–	–	–	–	–	–	–	–	–	–	–	–
F302	∅140	169.5	149.5	∅140	169.5	149.5	□115	173.5	149.5	□145	175.5	149.5	–	–	–
F303	∅140	206.5	149.5	–	–	–	–	–	–	–	–	–	–	–	–
F402	–	–	–	–	–	–	∅160	188.5	169.0	□145	190.5	169.0	□190	193.5	169.0
F403	∅140	221.5	169.0	∅140	221.5	169.0	–	–	–	–	–	–	–	–	–
F602	–	–	–	–	–	–	∅160	219.5	196.0	□145	221.5	196.0	□190	224.5	196.0
F603	–	–	–	–	–	–	∅160	262.5	196.0	–	–	–	–	–	–

8.3.6 V shaft design (solid shaft), Q housing design (square flange)

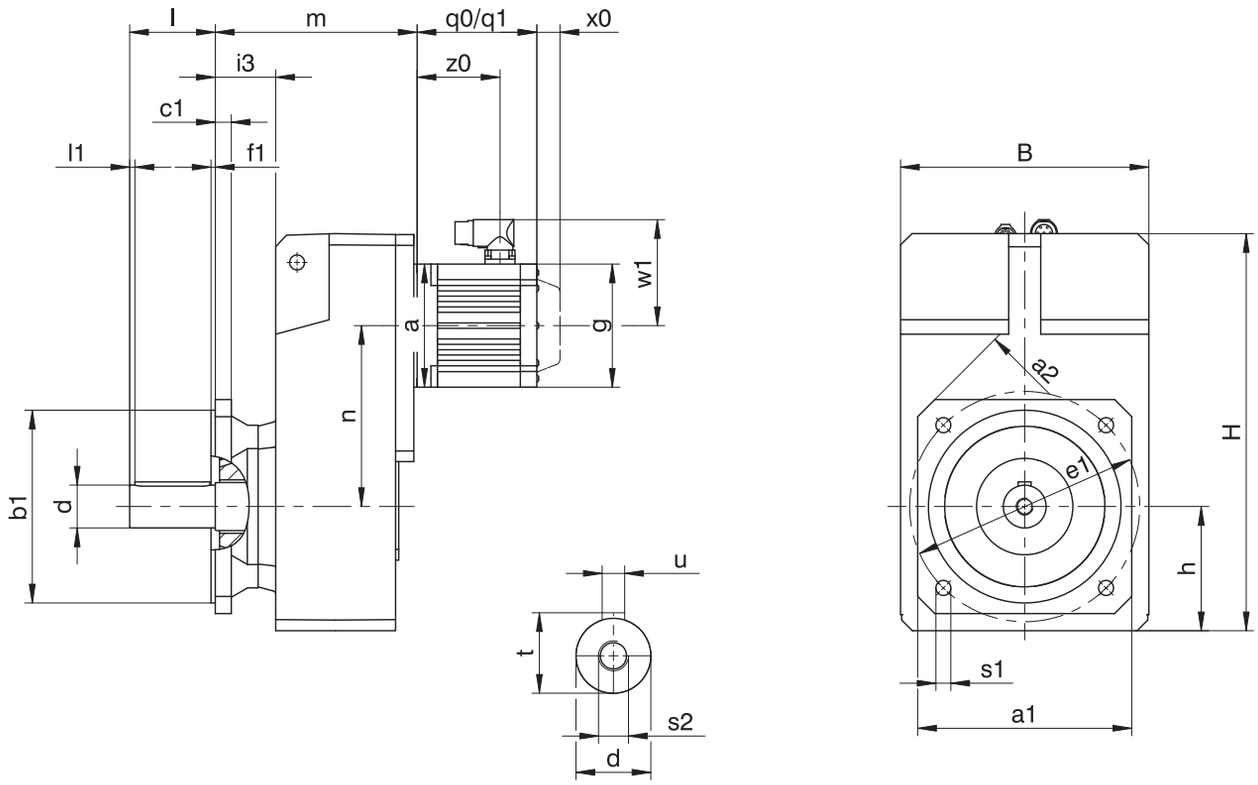

q0	Applies to motors without brake.	q1	Applies to motors with brake.
x0	Applies to encoders using an optical measuring method.	w1	Different for the One Cable Solution (OCS), see the chapter [▸ 17.4]

Dimensions of gear units

Type	□a1	□a2	Øb1	c1	B	Ød	Øe1	f1	h	H	i3	l	l1	Øs1	s2	t	u
F1	125	160	110_{j6}	10	145	25_{k6}	130	3.5	74	238.0	44.5	50	5	9	M10	28.0	A8×7×40
F2	150	195	130_{j6}	14	180	30_{k6}	165	3.5	93	299.0	53.0	60	5	11	M10	33.0	A8×7×50
F3	200	260	180_{j6}	15	206	35_{k6}	215	4.0	106	335.5	56.5	70	5	14	M12	38.0	A10×8×60
F4	200	260	180_{j6}	15	230	40_{k6}	215	4.0	116	370.0	56.5	80	5	14	M16	43.0	A12×8×70
F6	250	325	230_{j6}	17	265	50_{k6}	265	4.0	137	433.0	60.5	100	5	14	M16	53.5	A14×9×90

Dimensions of motors

Type	□g	q0	q1	w1	x0	z0
EZ301U	72	114.0	154.0	55.5	21	78.5
EZ302U	72	136.0	176.0	55.5	21	100.5
EZ303U	72	158.0	198.0	55.5	21	122.5
EZ401U	98	118.5	167.0	91.0	22	76.5
EZ402U	98	143.5	192.0	91.0	22	101.5
EZ404U	98	193.5	242.0	91.0	22	151.5
EZ501U	115	112.0	166.5	100.0	22	77.5
EZ502U	115	137.0	191.5	100.0	22	102.5
EZ503U	115	162.0	216.5	100.0	22	127.5
EZ505U	115	212.0	266.5	100.0	22	177.5
EZ701U	145	125.0	184.0	115.0	22	87.0
EZ702U	145	150.0	209.0	115.0	22	112.0
EZ703U	145	175.0	234.0	115.0	22	137.0
EZ705U	145	230.0	289.0	134.0	22	188.0
EZ802U	190	232.5	309.5	156.5	22	178.5
EZ803U	190	273.5	350.5	156.5	22	219.5
EZ805U	190	355.5	432.5	156.5	22	301.5

Dimensions of geared motors

Type	EZ3			EZ4			EZ5			EZ7			EZ8		
	a	m	n	a	m	n	a	m	n	a	m	n	a	m	n
F102	□72	129.5	102.0	□98	129.5	102.0	□115	133.5	102.0	□145	135.5	102.0	–	–	–
F202	□72	153.0	131.0	□98	153.0	131.0	□115	157.0	131.0	□145	159.0	131.0	–	–	–
F203	∅140	190.0	131.0	–	–	–	–	–	–	–	–	–	–	–	–
F302	∅140	169.5	149.5	∅140	169.5	149.5	□115	173.5	149.5	□145	175.5	149.5	–	–	–
F303	∅140	206.5	149.5	–	–	–	–	–	–	–	–	–	–	–	–
F402	–	–	–	–	–	–	∅160	188.5	169.0	□145	190.5	169.0	□190	193.5	169.0
F403	∅140	221.5	169.0	∅140	221.5	169.0	–	–	–	–	–	–	–	–	–
F602	–	–	–	–	–	–	∅160	219.5	196.0	□145	221.5	196.0	□190	224.5	196.0
F603	–	–	–	–	–	–	∅160	262.5	196.0	–	–	–	–	–	–

8.3.7 S shaft design (hollow shaft with shrink disk), G housing design (pitch circle diameter)

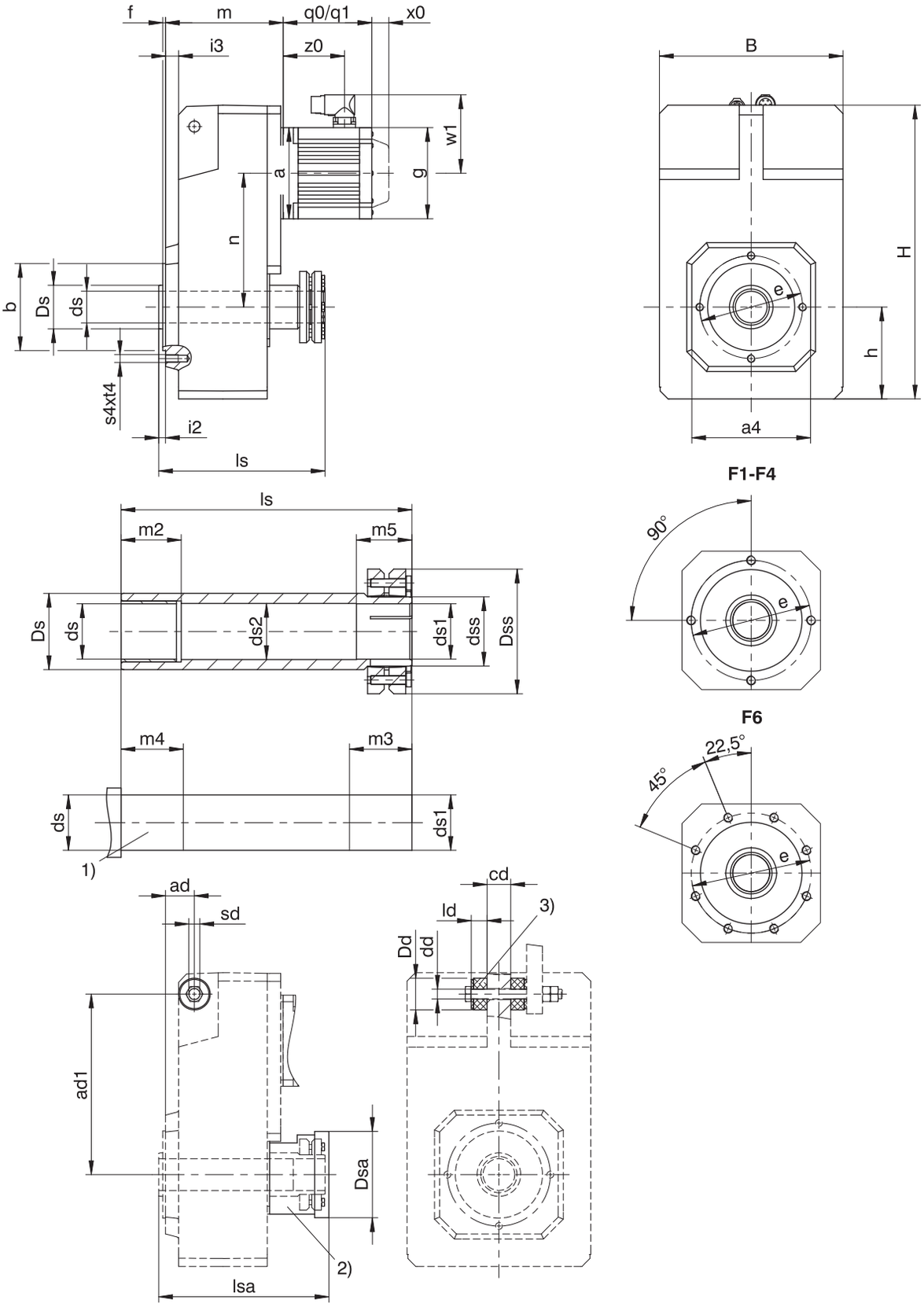

q0	Applies to motors without brake.	q1	Applies to motors with brake.
x0	Applies to encoders using an optical measuring method.	w1	Different for the One Cable Solution (OCS), see the chapter [▸ 17.4]
1)	Machine shaft: The dimension ls must meet or exceed the specified value.	2)	Cover (optional)

3) Rubber buffer for torque arm bracket (optional). Dimension ∅Dd = outer∅ of the rubber buffer when not tensioned.

Dimensions of gear units

Type	□a4	ad	ad1	Øb	B	cd	Ødd	Øds	Øds1	Øds2	Ødss	ØDd	ØDs	ØDsa	ØDss	Øe	f	h	H	i2	i3	ld	ls	lsa	m2	m3	m4	m5	s4	sd	t4
F1	100	29.5	150	70_{j6}	145	20	$11.0^{+0,5}$	20_{h9}	20_{h9}^{H7}	20.5	24	30	35	63	50	85	2.5	74	238.0	6.5	12.5	15	146	150	20	31	25	26	M8	M10	13
F2	130	33.0	181	95_{j6}	180	22	$11.0^{+0,5}$	25_{h9}	25_{h9}^{H7}	25.5	30	30	45	73	60	115	3.0	93	299.0	8.0	15.0	15	175	180	20	37	25	32	M8	M10	13
F3	150	38.5	205	110_{j6}	206	30	$14.0^{+0,5}$	30_{h9}	30_{h9}^{H7}	30.5	36	37	50	83	72	130	3.5	106	335.5	8.5	16.5	20	192	196	25	37	30	32	M10	M12	16
F4	150	38.5	228	110_{j6}	230	30	$14.0^{+0,5}$	40_{h9}	40_{h9}^{H7}	40.5	50	37	55	108	90	130	3.5	116	370.0	8.5	16.5	20	210	215	40	45	45	40	M10	M12	16
F6	180	44.5	270	130_{j6}	265	35	$22.0^{+0,5}$	50_{h9}	50_{h9}^{H7}	50.5	62	60	70	128	106	165	3.5	137	433.0	10.5	20.5	30	248	251	40	47	45	42	M10	M20	16

Dimensions of motors

Type	□g	q0	q1	w1	x0	z0
EZ301U	72	114.0	154.0	55.5	21	78.5
EZ302U	72	136.0	176.0	55.5	21	100.5
EZ303U	72	158.0	198.0	55.5	21	122.5
EZ401U	98	118.5	167.0	91.0	22	76.5
EZ402U	98	143.5	192.0	91.0	22	101.5
EZ404U	98	193.5	242.0	91.0	22	151.5
EZ501U	115	112.0	166.5	100.0	22	77.5
EZ502U	115	137.0	191.5	100.0	22	102.5
EZ503U	115	162.0	216.5	100.0	22	127.5
EZ505U	115	212.0	266.5	100.0	22	177.5
EZ701U	145	125.0	184.0	115.0	22	87.0
EZ702U	145	150.0	209.0	115.0	22	112.0
EZ703U	145	175.0	234.0	115.0	22	137.0
EZ705U	145	230.0	289.0	134.0	22	188.0
EZ802U	190	232.5	309.5	156.5	22	178.5
EZ803U	190	273.5	350.5	156.5	22	219.5
EZ805U	190	355.5	432.5	156.5	22	301.5

Dimensions of geared motors

Type	EZ3			EZ4			EZ5			EZ7			EZ8		
	a	m	n	a	m	n	a	m	n	a	m	n	a	m	n
F102	□72	97.5	102.0	□98	97.5	102.0	□115	101.5	102.0	□145	103.5	102.0	–	–	–
F202	□72	115.0	131.0	□98	115.0	131.0	□115	119.0	131.0	□145	121.0	131.0	–	–	–
F203	∅140	152.0	131.0	–	–	–	–	–	–	–	–	–	–	–	–
F302	∅140	129.5	149.5	∅140	129.5	149.5	□115	133.5	149.5	□145	135.5	149.5	–	–	–
F303	∅140	166.5	149.5	–	–	–	–	–	–	–	–	–	–	–	–
F402	–	–	–	–	–	–	∅160	148.5	169.0	□145	150.5	169.0	□190	153.5	169.0
F403	∅140	181.5	169.0	∅140	181.5	169.0	–	–	–	–	–	–	–	–	–
F602	–	–	–	–	–	–	∅160	179.5	196.0	□145	181.5	196.0	□190	184.5	196.0
F603	–	–	–	–	–	–	∅160	222.5	196.0	–	–	–	–	–	–

8.3.8 S shaft design (hollow shaft with shrink disk), GN housing design (pitch circle diameter + side fastening)

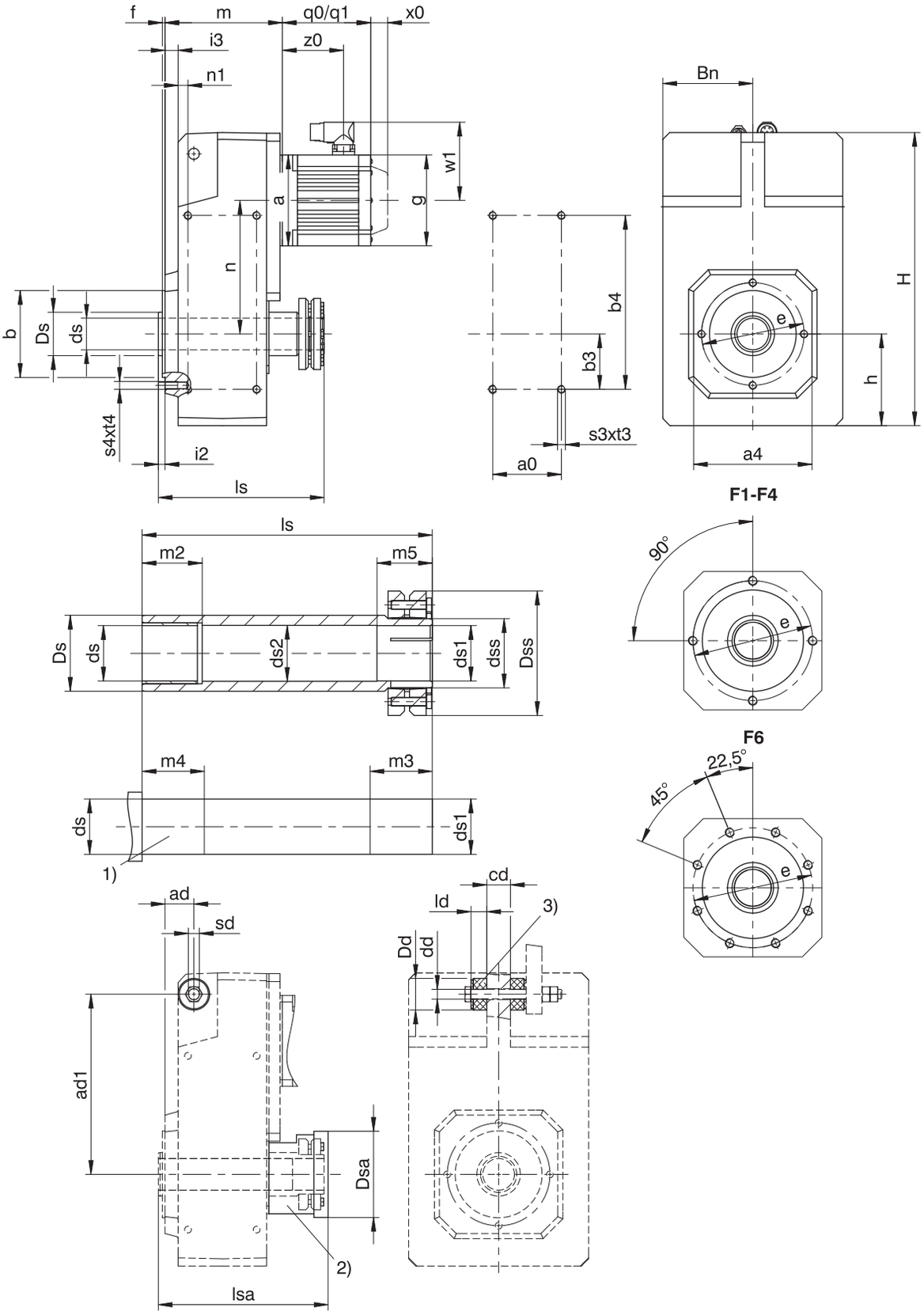

q0	Applies to motors without brake.	q1	Applies to motors with brake.
x0	Applies to encoders using an optical measuring method.	w1	Different for the One Cable Solution (OCS), see the chapter [▶ 17.4]
1)	Machine shaft: The dimension ls must meet or exceed the specified value.	2)	Cover (optional)

3) Rubber buffer for torque arm bracket (optional). Dimension ∅Dd = outer∅ of the rubber buffer when not tensioned.

Dimensions of gear units

Type	a0	□a4	ad	ad1	Øb	b3	b4	Bn	cd	Ødd	Øds	Øds1	Øds2	Ødss	ØDd	ØDs	ØDsa	ØDss
F1	50	100	29.5	150	70_{j6}	40	140	71	20	$11.0^{+0,5}$	20_{h9}	20_{h9}^{H7}	20.5	24	30	63	63	50
F2	64	130	33.0	181	95_{j6}	55	175	88	22	$11.0^{+0,5}$	25_{h9}	25_{h9}^{H7}	25.5	30	30	73	73	60
F3	72	150	38.5	205	110_{j6}	60	200	102	30	$14.0^{+0,5}$	30_{h9}	30_{h9}^{H7}	30.5	36	37	83	83	72
F4	87	150	38.5	228	110_{j6}	70	220	114	30	$14.0^{+0,5}$	40_{h9}	40_{h9}^{H7}	40.5	50	37	108	108	90
F6	108	180	44.5	270	130_{j6}	85	270	131	35	$22.0^{+0,5}$	50_{h9}	50_{h9}^{H7}	50.5	62	60	128	128	106

Type	Øe	f	h	H	i2	i3	ld	ls	lsa	n1	m2	m3	m4	m5	s3	s4	sd	t3	t4
F1	85	2.5	74	238.0	6.5	12.5	15	146	150	10	20	31	25	26	M6	M8	M10	11	13
F2	115	3.0	93	299.0	8.0	15.0	15	175	180	10.5	20	37	25	32	M8	M8	M10	13	13
F3	130	3.5	106	335.5	8.5	16.5	20	192	196	12.5	25	37	30	32	M10	M10	M12	16	16
F4	130	3.5	116	370.0	8.5	16.5	20	210	215	12.5	40	45	45	40	M10	M10	M12	16	16
F6	165	3.5	137	433.0	10.5	20.5	30	248	251	15.5	40	47	45	42	M12	M10	M20	19	16

Dimensions of motors

Type	□g	q0	q1	w1	x0	z0
EZ301U	72	114.0	154.0	55.5	21	78.5
EZ302U	72	136.0	176.0	55.5	21	100.5
EZ303U	72	158.0	198.0	55.5	21	122.5
EZ401U	98	118.5	167.0	91.0	22	76.5
EZ402U	98	143.5	192.0	91.0	22	101.5
EZ404U	98	193.5	242.0	91.0	22	151.5
EZ501U	115	112.0	166.5	100.0	22	77.5
EZ502U	115	137.0	191.5	100.0	22	102.5
EZ503U	115	162.0	216.5	100.0	22	127.5
EZ505U	115	212.0	266.5	100.0	22	177.5
EZ701U	145	125.0	184.0	115.0	22	87.0
EZ702U	145	150.0	209.0	115.0	22	112.0
EZ703U	145	175.0	234.0	115.0	22	137.0
EZ705U	145	230.0	289.0	134.0	22	188.0
EZ802U	190	232.5	309.5	156.5	22	178.5
EZ803U	190	273.5	350.5	156.5	22	219.5
EZ805U	190	355.5	432.5	156.5	22	301.5

Dimensions of geared motors

Type	EZ3			EZ4			EZ5			EZ7			EZ8		
	a	m	n	a	m	n	a	m	n	a	m	n	a	m	n
F102	□72	97.5	102.0	□98	97.5	102.0	□115	101.5	102.0	□145	103.5	102.0	–	–	–
F202	□72	115.0	131.0	□98	115.0	131.0	□115	119.0	131.0	□145	121.0	131.0	–	–	–
F203	∅140	152.0	131.0	–	–	–	–	–	–	–	–	–	–	–	–
F302	∅140	129.5	149.5	∅140	129.5	149.5	□115	133.5	149.5	□145	135.5	149.5	–	–	–
F303	∅140	166.5	149.5	–	–	–	–	–	–	–	–	–	–	–	–
F402	–	–	–	–	–	–	∅160	148.5	169.0	□145	150.5	169.0	□190	153.5	169.0
F403	∅140	181.5	169.0	∅140	181.5	169.0	–	–	–	–	–	–	–	–	–
F602	–	–	–	–	–	–	∅160	179.5	196.0	□145	181.5	196.0	□190	184.5	196.0
F603	–	–	–	–	–	–	∅160	222.5	196.0	–	–	–	–	–	–

8.3.9 S shaft design (hollow shaft with shrink disk), F housing design (round flange)

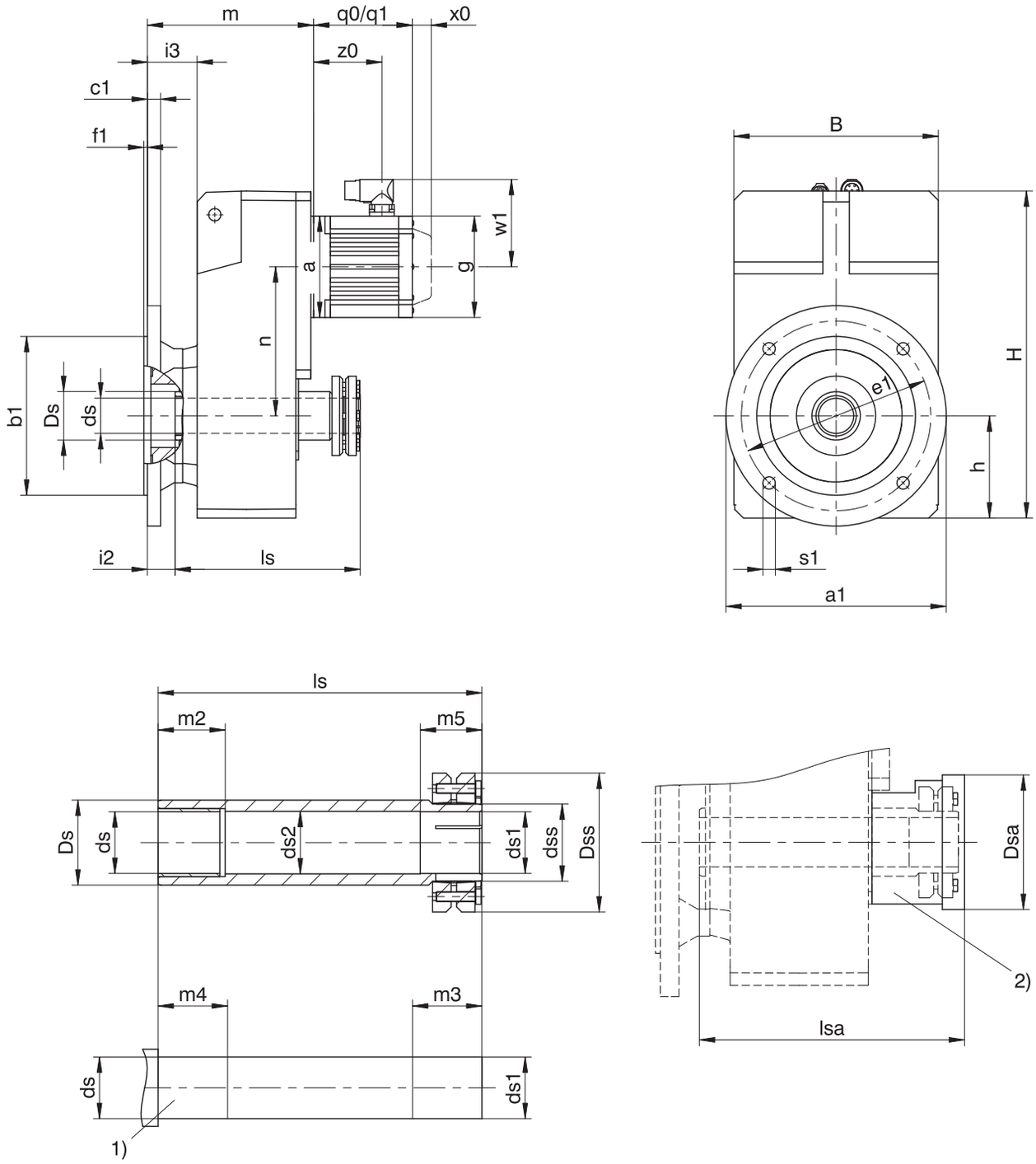

q0	Applies to motors without brake.	q1	Applies to motors with brake.
x0	Applies to encoders using an optical measuring method.	w1	Different for the One Cable Solution (OCS), see the chapter [▸ 17.4]
1)	Machine shaft: The dimension ls must meet or exceed the specified value.	2)	Cover (optional)

Dimensions of gear units

Type	Øa1	Øb1	B	c1	Øds	Øds1	Øds2	Ødss	ØDs	ØDsa	ØDss	Øe1	f1	h	H	i2	i3	ls	lsa	m2	m3	m4	m5	Øs1
F1	160	110_{j6}	145	10	20_{h9}	20_{h9}^{H7}	20.5	24	35	63	50	130	3.5	74	238.0	25.5	44.5	146	150	20	31	25	26	9
F2	200	130_{j6}	180	14	25_{h9}	25_{h9}^{H7}	25.5	30	45	73	60	165	3.5	93	299.0	30.0	53.0	175	180	20	37	25	32	11
F3	250	180_{j6}	206	15	30_{h9}	30_{h9}^{H7}	30.5	36	50	83	72	215	4.0	106	335.5	31.5	56.5	192	196	25	37	30	32	14
F4	250	180_{j6}	230	15	40_{h9}	40_{h9}^{H7}	40.5	50	55	108	90	215	4.0	116	370.0	31.5	56.5	210	215	40	45	45	40	14
F6	300	230_{j6}	265	17	50_{h9}	50_{h9}^{H7}	50.5	62	70	128	106	265	4.0	137	433.0	29.5	60.5	248	251	40	47	45	42	14

Dimensions of motors

Type	□g	q0	q1	w1	x0	z0
EZ301U	72	114.0	154.0	55.5	21	78.5
EZ302U	72	136.0	176.0	55.5	21	100.5
EZ303U	72	158.0	198.0	55.5	21	122.5
EZ401U	98	118.5	167.0	91.0	22	76.5
EZ402U	98	143.5	192.0	91.0	22	101.5
EZ404U	98	193.5	242.0	91.0	22	151.5
EZ501U	115	112.0	166.5	100.0	22	77.5
EZ502U	115	137.0	191.5	100.0	22	102.5
EZ503U	115	162.0	216.5	100.0	22	127.5
EZ505U	115	212.0	266.5	100.0	22	177.5
EZ701U	145	125.0	184.0	115.0	22	87.0
EZ702U	145	150.0	209.0	115.0	22	112.0
EZ703U	145	175.0	234.0	115.0	22	137.0
EZ705U	145	230.0	289.0	134.0	22	188.0
EZ802U	190	232.5	309.5	156.5	22	178.5
EZ803U	190	273.5	350.5	156.5	22	219.5
EZ805U	190	355.5	432.5	156.5	22	301.5

Dimensions of geared motors

Type	EZ3			EZ4			EZ5			EZ7			EZ8		
	a	m	n	a	m	n	a	m	n	a	m	n	a	m	n
F102	□72	129.5	102.0	□98	129.5	102.0	□115	133.5	102.0	□145	135.5	102.0	–	–	–
F202	□72	153.0	131.0	□98	153.0	131.0	□115	157.0	131.0	□145	159.0	131.0	–	–	–
F203	∅140	190.0	131.0	–	–	–	–	–	–	–	–	–	–	–	–
F302	∅140	169.5	149.5	∅140	169.5	149.5	□115	173.5	149.5	□145	175.5	149.5	–	–	–
F303	∅140	206.5	149.5	–	–	–	–	–	–	–	–	–	–	–	–
F402	–	–	–	–	–	–	∅160	188.5	169.0	□145	190.5	169.0	□190	193.5	169.0
F403	∅140	221.5	169.0	∅140	221.5	169.0	–	–	–	–	–	–	–	–	–
F602	–	–	–	–	–	–	∅160	219.5	196.0	□145	221.5	196.0	□190	224.5	196.0
F603	–	–	–	–	–	–	∅160	262.5	196.0	–	–	–	–	–	–

8.3.10 S shaft design (hollow shaft with shrink disk), Q housing design (square flange)

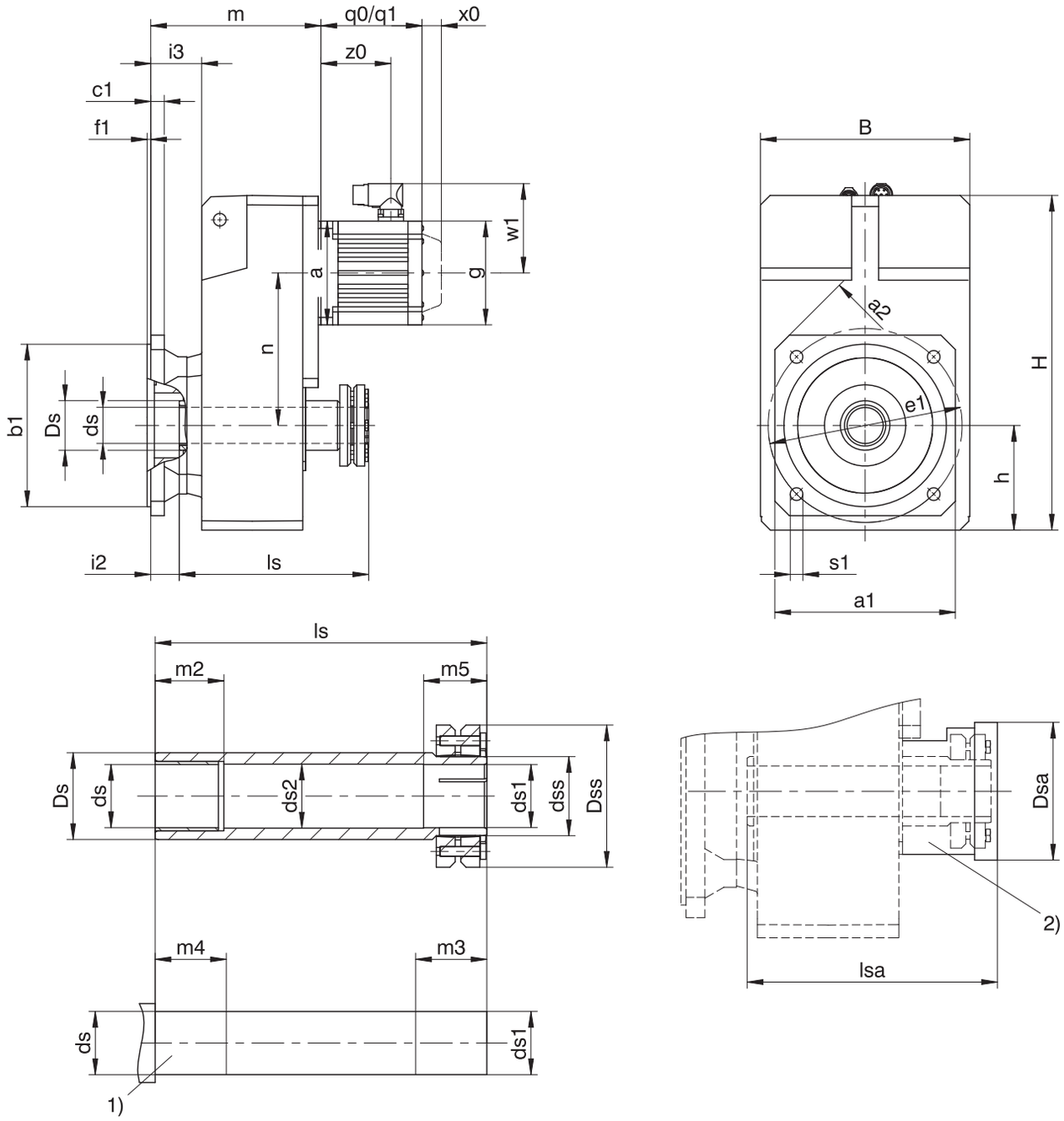

q0	Applies to motors without brake.	q1	Applies to motors with brake.
x0	Applies to encoders using an optical measuring method.	w1	Different for the One Cable Solution (OCS), see the chapter [▸ 17.4]
1)	Machine shaft: The dimension ls must meet or exceed the specified value.	2)	Cover (optional)

Dimensions of gear units

Type	□a1	□a2	Øb1	B	c1	Øds	Øds1	Øds2	Ødss	ØDs	ØDsa	ØDss	Øe1	f1	h	H	i2	i3	ls	lsa	m2	m3	m4	m5	Øs1
F1	125	160	110_{j6}	145	10	20_{h9}	20_{h9}^{H7}	20.5	24	35	63	50	130	3.5	74	238.0	25.5	44.5	146	150	20	31	25	26	9
F2	150	195	130_{j6}	180	14	25_{h9}	25_{h9}^{H7}	25.5	30	45	73	60	165	3.5	93	299.0	30.0	53.0	175	180	20	37	25	32	11
F3	200	260	180_{j6}	206	15	30_{h9}	30_{h9}^{H7}	30.5	36	50	83	72	215	4.0	106	335.5	31.5	56.5	192	196	25	37	30	32	14
F4	200	260	180_{j6}	230	15	40_{h9}	40_{h9}^{H7}	40.5	50	55	108	90	215	4.0	116	370.0	31.5	56.5	210	215	40	45	45	40	14
F6	250	325	230_{j6}	265	17	50_{h9}	50_{h9}^{H7}	50.5	62	70	128	106	265	4.0	137	433.0	29.5	60.5	248	251	40	47	45	42	14

Dimensions of motors

Type	□g	q0	q1	w1	x0	z0
EZ301U	72	114.0	154.0	55.5	21	78.5
EZ302U	72	136.0	176.0	55.5	21	100.5
EZ303U	72	158.0	198.0	55.5	21	122.5
EZ401U	98	118.5	167.0	91.0	22	76.5
EZ402U	98	143.5	192.0	91.0	22	101.5
EZ404U	98	193.5	242.0	91.0	22	151.5
EZ501U	115	112.0	166.5	100.0	22	77.5
EZ502U	115	137.0	191.5	100.0	22	102.5
EZ503U	115	162.0	216.5	100.0	22	127.5
EZ505U	115	212.0	266.5	100.0	22	177.5
EZ701U	145	125.0	184.0	115.0	22	87.0
EZ702U	145	150.0	209.0	115.0	22	112.0
EZ703U	145	175.0	234.0	115.0	22	137.0
EZ705U	145	230.0	289.0	134.0	22	188.0
EZ802U	190	232.5	309.5	156.5	22	178.5
EZ803U	190	273.5	350.5	156.5	22	219.5
EZ805U	190	355.5	432.5	156.5	22	301.5

Dimensions of geared motors

Type	EZ3			EZ4			EZ5			EZ7			EZ8		
	a	m	n	a	m	n	a	m	n	a	m	n	a	m	n
F102	□72	129.5	102.0	□98	129.5	102.0	□115	133.5	102.0	□145	135.5	102.0	–	–	–
F202	□72	153.0	131.0	□98	153.0	131.0	□115	157.0	131.0	□145	159.0	131.0	–	–	–
F203	∅140	190.0	131.0	–	–	–	–	–	–	–	–	–	–	–	–
F302	∅140	169.5	149.5	∅140	169.5	149.5	□115	173.5	149.5	□145	175.5	149.5	–	–	–
F303	∅140	206.5	149.5	–	–	–	–	–	–	–	–	–	–	–	–
F402	–	–	–	–	–	–	∅160	188.5	169.0	□145	190.5	169.0	□190	193.5	169.0
F403	∅140	221.5	169.0	∅140	221.5	169.0	–	–	–	–	–	–	–	–	–
F602	–	–	–	–	–	–	∅160	219.5	196.0	□145	221.5	196.0	□190	224.5	196.0
F603	–	–	–	–	–	–	∅160	262.5	196.0	–	–	–	–	–	–

8.4 Type designation

This chapter shows you an explanation of the type designation with the associated options.

Additional ordering information not included in the type designation can be found at the end of the chapter.

Example code

F	2	0	2	A	G	0700	EZ401U

Explanation

Code	Designation	Design
F	Type	Offset helical gear unit
2	Size	2 (example)
0	Generation	Generation 0
2	Stages	Two-stage
3		Three-stage
A	Shaft	Hollow shaft with keyway
S		Hollow shaft with shrink ring
V		Solid shaft
G	Housing	Pitch circle diameter
F		Round flange
Q		Square flange
GN		Pitch circle diameter + side fastening
/0700	Transmission ratio (i x 10 rounded)	i = 70.13 (example)
EZ401U	Motor	EZ synchronous servo motor

To complete the type designation, also specify the following in your order:

- A detailed type designation of the motor, see the chapter [▸ 17]
- The mounting position, see the chapter [▸ 8.5.5]
- The position of the plug connectors, see the chapter [▸ 8.5.7]

8.4.1 Nameplate

An example gear unit nameplate is explained in the figure below.

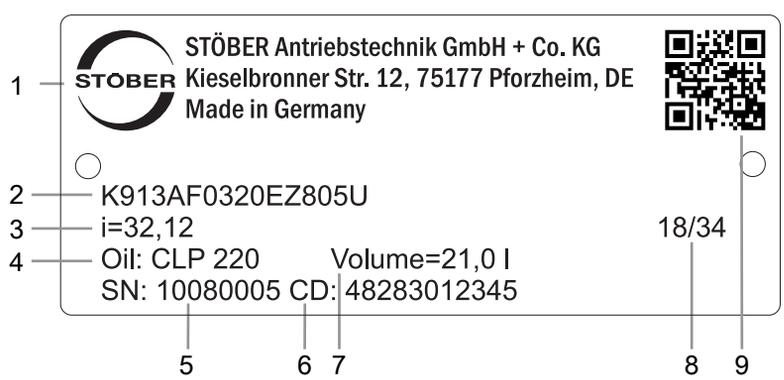

Code	Designation
1	Name of manufacturer
2	Type designation
3	Gear ratio of the gear unit
4	Lubricant specification
5	Serial number of the gear unit
6	Customer-specific data
7	Lubricant fill volume
8	Date of manufacture (year/calendar week)
9	QR code (link to product information)

8.4.1.1 Supporting documents

You can view or download supporting documents for the product by reading off the serial number on the nameplate of the product and entering it at the following address online:
https://id.stober.com

Alternatively, you can use a suitable mobile device to scan in the QR code on the nameplate of the product in order to be linked to the supporting documents.

8.5 Product description

8.5.1 Input options

EZ synchronous servo motor

http://www.stoeber.de/en/FEZ

LM Lean motor

http://www.stoeber.de/en/FLM

Asynchronous motor

http://www.stoeber.de/en/FIE3D

8.5.2 Housing design

Pitch circle diameter G	Round flange F
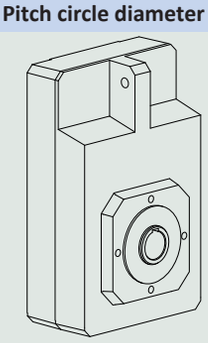	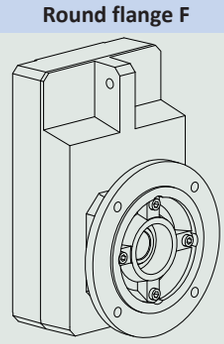

Square flange Q	Pitch circle diameter + side fastening GN
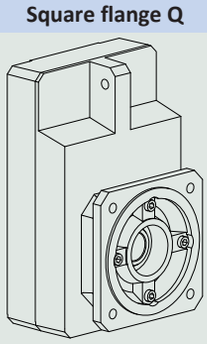	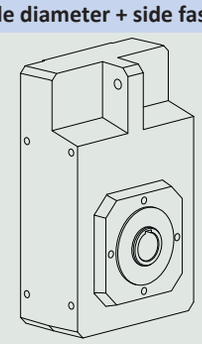

	G	F	Q	GN
F1	✓	✓	✓	✓
F2	✓	✓	✓	✓
F3	✓	✓	✓	✓
F4	✓	✓	✓	✓
F6	✓	✓	✓	✓

8.5.3 Combinatorial shaft/housing design

	Housing design				
Shaft design	**Code**	**G**	**F**	**Q**	**GN**
Hollow shaft with keyway	**A**	AG	AF	AQ	AGN
Hollow shaft with shrink ring	**S**	SG	SF	SQ	SGN
Solid shaft	**V**	–	VF	VQ	–

8.5.4 Installation conditions

Hollow shaft

The hollow shaft hole tolerance is ISO H7. The tolerance of the machine shaft must be ISO k6.

Take care to align the machine shaft with the gear unit hollow shaft when attaching the gear unit.

Maximum deviation ≤ 0.03 mm.

For simpler assembly and disassembly of the machine shaft, the hollow shafts are equipped with a spiral groove (as a grease deposit).

A hardened, threaded keeper plate is included in the scope of delivery. You also have the option to order the hollow shaft without a keeper plate.

Hollow shaft with shrink ring

The tolerance of the hollow shaft hole is ISO H7.

The machine shaft must be ISO h9.

Select a material for the machine shaft with a permitted surface pressure of $p \geq 325\ N/mm^2$.

Possible materials:

- C45E +QT
- 42CrMo4

Fastening the gear units on the machine side using the pitch circle diameter

The specified torques and forces only apply when gear units are fastened on the machine side using screws of strength class 10.9. In addition, the gear housings must be adjusted at the pilot. The machine-side fit must be H7.

8.5.5 Mounting positions

The following table shows the standard mounting positions.

The numbers identify the gear unit sides. The mounting position is defined by the gear side facing downwards.

EL1	EL2	EL3
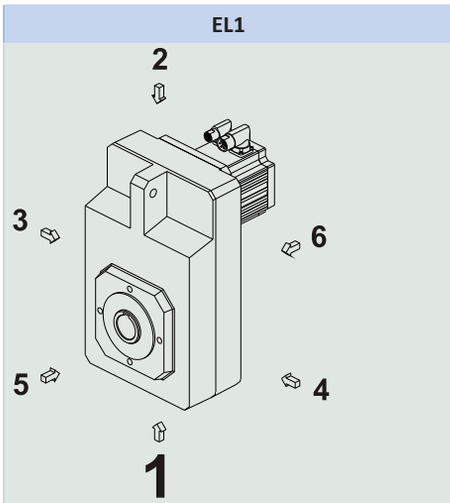	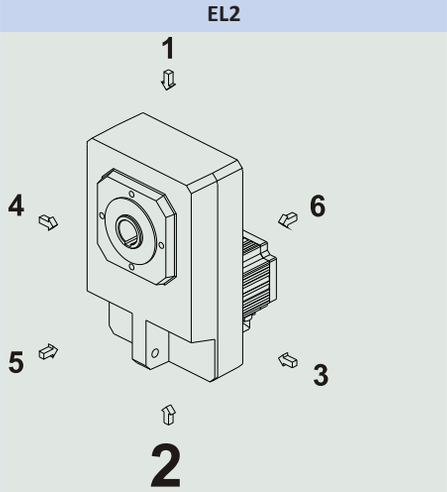	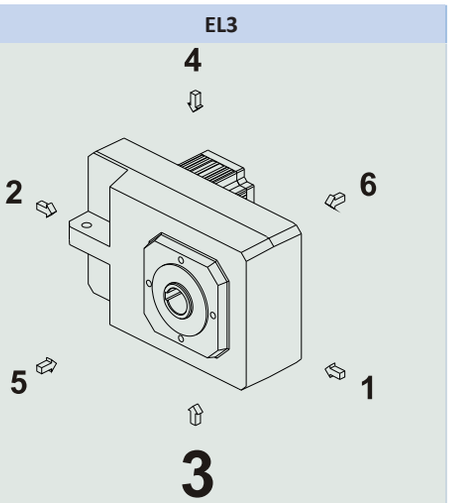

EL4	EL5	EL6
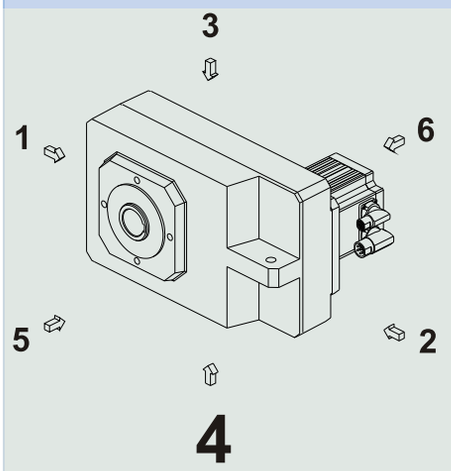	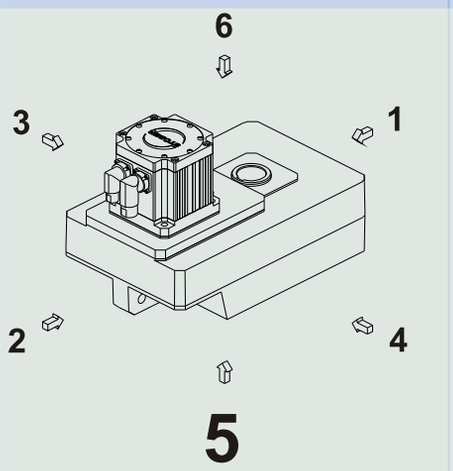	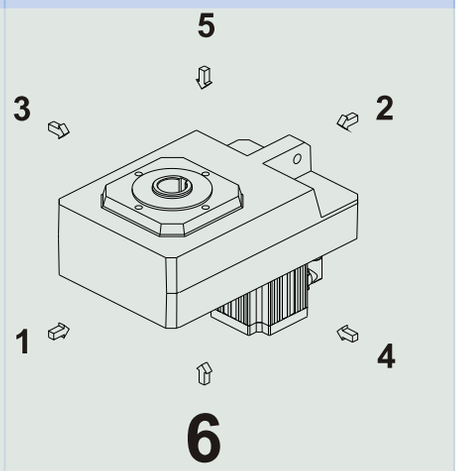

Since the lubricant filling volume of the gear unit depends on the mounting position, the mounting position must be specified when ordering.

8.5.6 Lubricants

STOBER fills the gear units with the amount and type of lubricant specified on the nameplate. The filling volume and the structure of the gear units depend on the mounting position.

Only install the gear units in the intended mounting position! Reposition the gear units only after consulting STOBER. Otherwise, STOBER assumes no liability for the gear units.

You will receive lubricants for use in the food industry upon request.

8.5.7 Position of the plug connectors

Mounting position EL1 Plug connector in 270° position (standard)	Mounting position EL4 Plug connector in 270° position (standard)
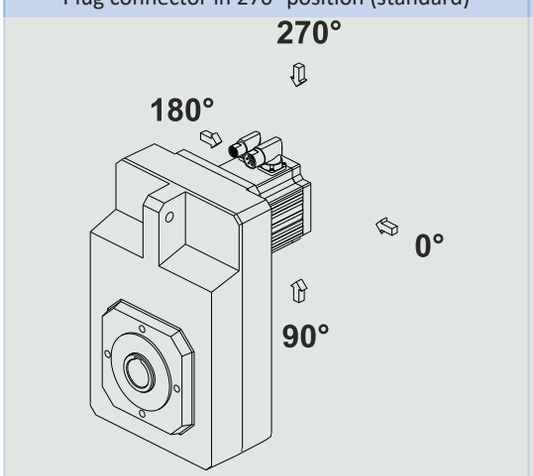	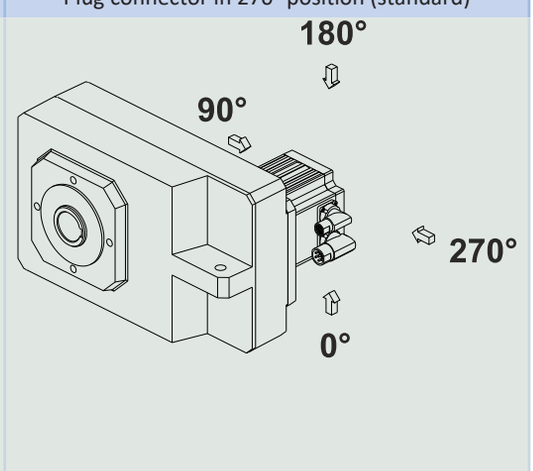

Indicate variations for your geared motor in the order.

Note that the plug connector position rotates along with the geared motor if the geared motor is in another mounting position.

8.5.8 Other product features

Feature	Value
Max. permitted gear unit temperature (on the surface of the gear unit)	≤ 80 °C
Paint	Black RAL 9005
Explosion-proof design in accordance with (ATEX) Directive 2014/34/EU (optional)	Not available
Efficiency: η_{get} two-stage η_{get} three-stage	 97% 96%
Protection class:[1] Gear unit Motor	 IP65 IP56, optionally IP66

8.5.9 Direction of rotation

Solid shaft (V), hollow shaft with keyway (A), hollow shaft with shrink ring (S)

F102 – F602	F203 – F603
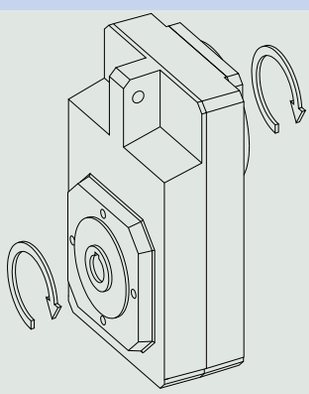	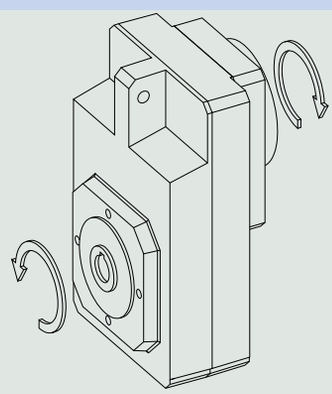
The input and output rotate in the same direction.	The input and output rotate in opposite directions.

The pictures show mounting position EL1.

8.6 Project configuration

Project your drives using our SERVOsoft designing software. Download SERVOsoft for free at https://www.stoeber.de/en/ServoSoft.

Observe the limit conditions in this chapter to ensure a safe design for your drives.

An explanation of the formula symbols can be found in Chapter [▶ 23.1].

The formula symbols for values actually present in the application are marked with *.

8.6.1 Calculation of the operating point

Check the following conditions for operating points other than the nominal point M_{2N} specified in the selection tables.

For mounting positions EL1, EL2, EL3, EL4:

$$n_{1m*} \leq \frac{n_{1maxDBEL1,2,3,4}}{fB_T}$$

For mounting positions EL5, EL6:

$$n_{1m*} \leq \frac{n_{1maxDBEL5,6}}{fB_T}$$

[1] Observe the protection class of all the components.

For all mounting positions:

$$n_{1max*} \leq \frac{n_{1max\,ZB}}{fB_T}$$

$$M_{2eff*} \leq M_{2th}$$

$$M_{2acc*} \leq M_{2acc}$$

$$M_{2NOT*} \leq M_{2NOT}$$

$$M_{2eq*} \leq M_{2N} \cdot \frac{S}{fB_{op} \cdot fB_t}$$

Refer to the selection table for the values for $n_{1maxDBEL1,2,3,4}$ and $n_{1maxDBEL5,6}$, n_{1maxZB}, M_{2acc}, M_{2NOT}, M_{2N} and S.

The values for fB_T, fB_{op} and fB_t can be found in the corresponding tables in this chapter.

Calculate the thermal limit torque M_{2th} for a duty cycle > 50%.

Example of cyclic operation

The following calculations are based on a representation of the power taken from the output based in accordance with the following example:

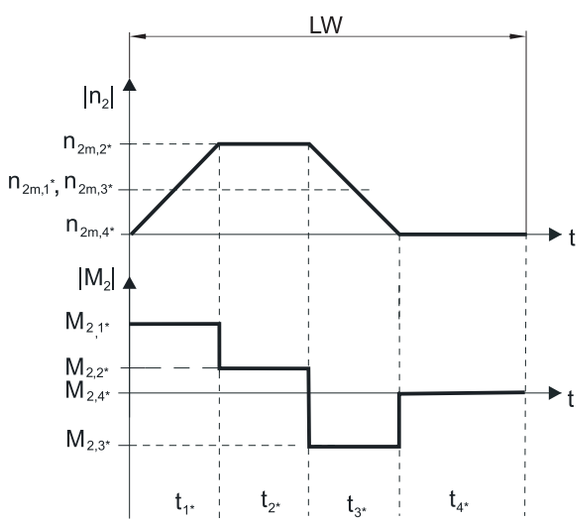

Calculation of the actual average input speed

$$n_{1m*} = n_{2m*} \cdot i$$

$$n_{2m*} = \frac{|n_{2m,1*}| \cdot t_{1*} + \ldots + |n_{2m,n*}| \cdot t_{n*}}{t_{1*} + \ldots + t_{n*}}$$

If $t_{1*} + \ldots + t_{3*} \geq 6$ min, calculate n_{2m*} without the rest phase t_{4*}.

The values for the ratio i can be found in the selection tables.

Calculation of the actual effective torque

$$M_{2eff*} = \sqrt{\frac{t_{1*} \cdot M_{2,1*}^{\;2} + \ldots + t_{n*} \cdot M_{2,n*}^{\;2}}{t_{1*} + \ldots + t_{n*}}}$$

Calculation of the actual equivalent torque

$$M_{2eq*} = \sqrt[3]{\frac{|n_{2m,1*}| \cdot t_{1*} \cdot |M_{2,1*}^{\;3}| + \ldots + |n_{2m,n*}| \cdot t_{n*} \cdot |M_{2,n*}^{\;3}|}{|n_{2m,1*}| \cdot t_{1*} + \ldots + |n_{2m,n*}| \cdot t_{n*}}}$$

Calculation of the thermal limit torque

Calculate the thermal limit torque M_{2th} for a duty cycle ED_{10} > 50% and the actual average input speed n_{1m*}. (At $K_{mot,th} \leq 0$ you must reduce the average input speed n_{1m*} accordingly or select another geared motor size.)

$$M_{2th} = M_{op} \cdot i \cdot K_{mot,th}$$

$$K_{mot,th} = 0{,}95 - \frac{a_{th}}{1000} \cdot athEL \cdot fB_T \cdot \left(\frac{n_{1m*}}{1000}\right)^3$$

The values for i and a_{th} can be found in the selection tables.

The values for a_{thEL} and fB_T can be found in the corresponding tables in this chapter.

The value for the torque of the motor at operating point M_{op} with the determined average input speed n_{1m*} can be found in the motor curve of Chapter [▸ 17.3]. Note the size, nominal speed n_N and cooling type of the motor. The figure below shows an example of reading the torque M_{op} of a motor with convection cooling at the operating point.

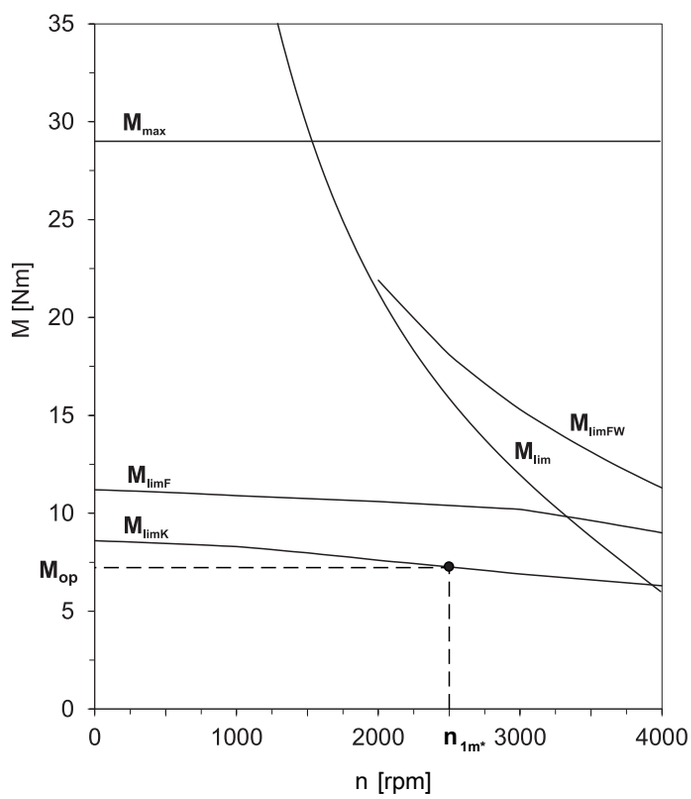

Operating factors

Parameter a_{thEL}

Mounting position	a_{thEL}
EL1, 2, 5, 6	1.0
EL3, 4	1.1

Operating mode	fB_{op}
Uniform continuous operation	1.00
Cyclic operation	1.25
Reversing load cyclic operation	1.40

Run time	fB_t
Daily runtime ≤ 8 h	1.00
Daily runtime ≤ 16 h	1.15
Daily runtime ≤ 24 h	1.20

Temperature		fB_T
Motor cooling	**Surrounding temperature**	
Motor with forced ventilation	≤ 20 °C	0.9
	≤ 30 °C	1.0
	≤ 40 °C	1.15
Motor with convection cooling	≤ 20 °C	1.0
	≤ 30 °C	1.1
	≤ 40 °C	1.25

Notes

- The maximum permitted gear unit temperature (see the "Other product features" chapter) must not be exceeded. Doing so may result in damage to the geared motor.
- For braking from full speed (for example when the power fails or when setting up the machine), note the permitted gear unit torques (M_{2acc}, M_{2NOT}) in the selection tables.

8.6.2 Permitted shaft loads for the output shaft

The values specified in the tables apply to the permitted shaft loads:

- For shaft dimensions in accordance with the catalog
- For output speeds n_{2m*} ≤ 20 rpm ($F_{2axN} = F_{2ax20}$; $F_{2radN} = F_{2rad20}$; $M_{2kN} = M_{2k20}$)
- Only if radial forces on the gear unit are stabilized by its pilots for the pitch circle diameter and flange housing design

8.6.2.1 V shaft design

Permitted shaft loads for V shaft design (solid shaft)

Type	z_2 [mm]	F_{2ax20} [N]	F_{2rad20} [N]	$F_{2rad,acc}$ [N]	M_{2k20} [Nm]	$M_{2k,acc}$ [Nm]
F1	35.0	1100	4200	4200	260	260
F2	41.0	1400	5400	5400	400	400
F3	43.0	1900	7500	7500	600	600
F4	44.0	2350	9250	9250	800	800
F6	44.0	3100	12500	12500	1200	1200

For other output speeds, download diagrams at http://configurator.stoeber.de.

The following applies to output speeds n_{2m*} > 20 rpm:

$$F_{2axN} = \frac{F_{2ax20}}{\sqrt[3]{\frac{n_{2m*}}{20\ \text{rpm}}}} \qquad F_{2radN} = \frac{F_{2rad20}}{\sqrt[3]{\frac{n_{2m*}}{20\ \text{rpm}}}} \qquad M_{2kN} = \frac{M_{2k20}}{\sqrt[3]{\frac{n_{2m*}}{20\ \text{rpm}}}}$$

The values for F_{2ax20}, F_{2rad20} and M_{2k20} can be found in the table "Permitted shaft loads" in this chapter.

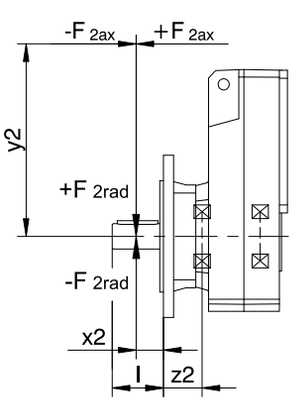

Fig. 1: Force application points for solid shaft

The specified values for F_{2rad20} are based on application of force at the middle of the output shaft: $x_2 = l/2$.

Shaft dimensions can be found in the "Dimensional drawings" chapter.

The following applies to other force application points:

$$M_{2k*} = \frac{2 \cdot F_{2ax*} \cdot y_2 + F_{2rad*} \cdot (x_2 + z_2)}{1000} \leq M_{2kN}$$

$$F_{2rad*} \leq F_{2radN}$$

$$F_{2ax*} \leq F_{2axN}$$

For applications with multiple axial and/or radial forces, you must add the forces as vectors.

In the event of EMERGENCY OFF operation (max. 1000 load changes), you can multiply the permitted forces and torques for F_{2ax20}, F_{2rad20} and M_{2k20} by a factor of two.

8.6.2.2 A and S shaft design

Permitted shaft loads for A shaft design (hollow shaft with keyway)

Type	z_2 [mm]	F_{2ax20} [N]	F_{2rad20} [N]	$F_{2rad,acc}$ [N]	M_{2k20} [Nm]	$M_{2k,acc}$ [Nm]
F1	30.0	900	4200	4200	175	175
F2	33.0	1200	5400	5400	250	250
F3	33.0	1350	7500	7500	375	375
F4	39.0	1900	9250	9250	550	550
F6	45.0	2200	12500	12500	800	800

Permitted shaft loads for S shaft design (hollow shaft with shrink ring)

Type	z_2 [mm]	F_{2ax20} [N]	F_{2rad20} [N]	$F_{2rad,acc}$ [N]	M_{2k20} [Nm]	$M_{2k,acc}$ [Nm]
F1	30.0	900	4200	4200	175	175
F2	33.0	1200	5400	5400	250	250
F3	33.0	1350	7500	7500	375	375
F4	39.0	1900	9250	9250	550	550
F6	45.0	2200	12500	12500	800	800

For other output speeds, download diagrams at http://configurator.stoeber.de.

The following applies to output speeds n_{2m*} > 20 rpm:

$$F_{2axN} = \frac{F_{2ax20}}{\sqrt[3]{\frac{n_{2m*}}{20\ \text{rpm}}}} \qquad F_{2radN} = \frac{F_{2rad20}}{\sqrt[3]{\frac{n_{2m*}}{20\ \text{rpm}}}} \qquad M_{2kN} = \frac{M_{2k20}}{\sqrt[3]{\frac{n_{2m*}}{20\ \text{rpm}}}}$$

The values for F_{2ax20}, F_{2rad20} and M_{2k20} can be found in the table "Permitted shaft loads" in this chapter.

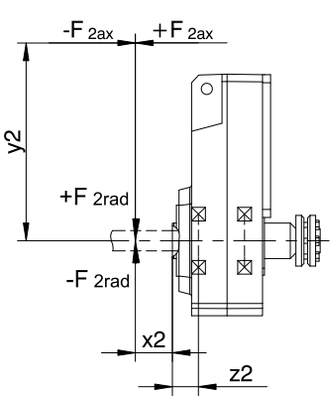

Fig. 2: Force application points for hollow shaft

You can determine the permitted radial forces from the permitted breakdown torque M_{2kN}. The actual radial forces may not exceed the permitted radial forces. The permitted radial forces pertain to the shaft end (x2 = 0).

$$M_{2k*} = \frac{2 \cdot F_{2ax*} \cdot y_2 + F_{2rad*} \cdot (x_2 + z_2)}{1000} \leq M_{2kN}$$

$$F_{2ax*} \leq F_{2axN}$$

For applications with multiple axial and/or radial forces, you must add the forces as vectors.

In the event of EMERGENCY OFF operation (max. 1000 load changes), you can multiply the permitted forces and torques for F_{2ax20}, F_{2rad20} and M_{2k20} by a factor of two.

8.6.3 Radial shaft seal rings

Leak-proofness

Our gear units are equipped with high-quality radial shaft seal rings and checked for leaks. However, a leak cannot be fully ruled out over the length of use of a gear unit. If you use a gear unit with goods incompatible with the lubricant, you must take measures to prevent direct contact with the gear unit lubricant in case of a leak.

8.7 Additional documentation

Additional documentation related to the product can be found at
http://www.stoeber.de/en/downloads/

Enter the ID of the documentation in the Search... field.

Documentation	ID
Operating manual for C/F/K/S gear units and gear motors	443027_en

9 KS right-angle servo geared motors

Table of contents

9.1 Overview 214

9.2 Selection tables 215

9.3 Dimensional drawings 221

9.3.1 F shaft design (flange hollow shaft) 222

9.3.2 S shaft design (hollow shaft with shrink disk) 224

9.3.3 G shaft design (solid shaft without feather key) 226

9.3.4 P shaft design (solid shaft with feather key) 228

9.3.5 Oil expansion tank 229

9.4 Type designation 230

9.4.1 Nameplate 230

9.5 Product description 231

9.5.1 Input options 231

9.5.2 Installation conditions 231

9.5.3 Mounting positions 232

9.5.4 Lubricants 232

9.5.5 Position of the plug connectors 233

9.5.6 Other product features 233

9.5.7 Direction of rotation 233

9.6 Project configuration 233

9.6.1 Calculation of the operating point 234

9.6.2 Permitted shaft loads for the output shaft 236

9.6.3 Torsional stiffness 240

9.6.4 Recommendation for radial shaft seal rings 240

9.6.5 Oil expansion tank 240

9.7 Additional documentation 240

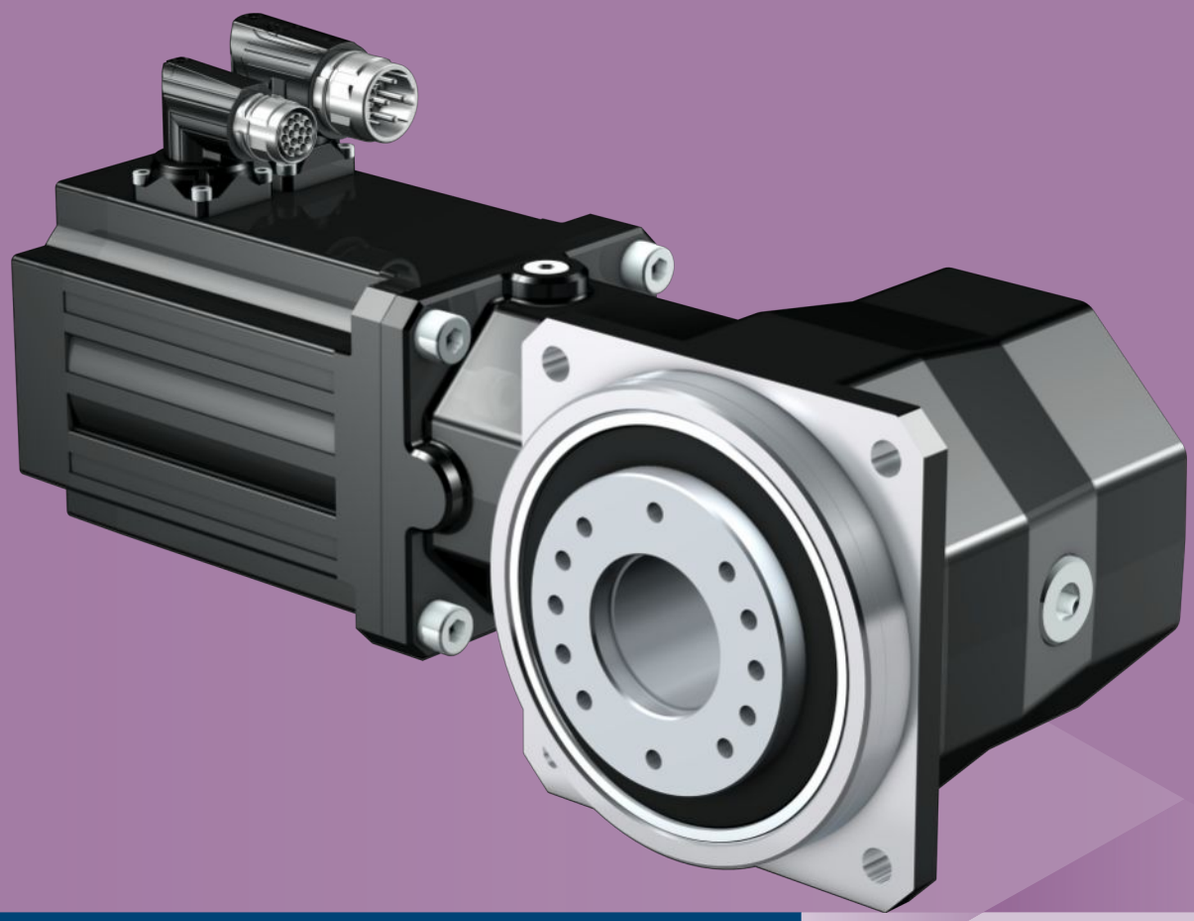

9 Right-angle servo geared motors

KS

9.1 Overview

Precision right-angle servo geared motors

Features

Power density	★★★☆☆
Backlash	★★★☆☆
Price category	€€€
Shaft load	★★★★★
Smooth operation	★★★★☆
Torsional stiffness	★★★☆☆
Mass moment of inertia	★★★★★
Helical gearing	✓
Maintenance-free	✓
FKM seal ring at the input	✓
Stiff output bearings due to pretension	✓
Compact and highly dynamic due to direct motor attachment	✓

Key ★☆☆☆☆ good | ★★★★★ excellent
€ Economy | €€€€€ Premium

Technical data

i	6 – 100
M_{2acc}	27 – 400 Nm
$\Delta\phi_2$	4 – 6 arcmin
η_{get}	93 – 95 %

9.2 Selection tables

The technical data specified in the selection tables applies to:

- Installation altitudes up to 1000 m above sea level
- Surrounding temperatures from 0 °C to 40 °C
- Drives with convection-cooled motors (e.g. EZ401**U**)

For the technical data on drives with forced ventilated motors (e.g. EZ401**B**), refer to http://configurator.stoeber.de.

An explanation of the formula symbols can be found in Chapter [▶ 23.1].

n_{2N} [rpm]	M_{2N} [Nm]	$M_{2,0}$ [Nm]	a_{th}	S	Type	M_{2acc} [Nm]	M_{2NOT} [Nm]	i	i_{exakt}	n_{1max} DB [rpm]	n_{1max} ZB [rpm]	J_1 [kgcm²]	$\Delta\varphi_2$ [arcmin]	C_2 [Nm/arcmin]	m [kg]
KS4 (n_{1N} = 3000 rpm, $M_{2acc,max}$ = 90 Nm)															
60	43	44	0.2	1.2	KS403_0500 EZ301U	90	140	50.00	50/1	4000	6000	0.23	6	8.5	9.0
75	35	35	0.3	1.5	KS403_0400 EZ301U	90	140	40.00	40/1	3500	6000	0.26	6	8.5	9.0
94	28	28	0.4	1.9	KS403_0320 EZ301U	83	140	32.00	32/1	3500	6000	0.27	6	8.5	9.0
94	47	50	0.6	1.1	KS403_0320 EZ302U	90	140	32.00	32/1	3500	6000	0.37	6	8.5	9.6
125	21	21	0.5	2.5	KS403_0240 EZ301U	62	140	24.00	24/1	3500	6000	0.29	6	8.5	9.0
125	35	37	0.9	1.5	KS403_0240 EZ302U	90	140	24.00	24/1	3500	6000	0.39	6	8.5	9.6
125	46	49	1.2	1.1	KS403_0240 EZ303U	90	140	24.00	24/1	3500	6000	0.50	6	8.5	10
150	18	18	0.7	2.9	KS402_0200 EZ301U	53	140	20.00	20/1	4000	6000	0.24	6	8.5	8.5
150	30	32	1.2	1.7	KS402_0200 EZ302U	90	140	20.00	20/1	4000	6000	0.34	6	8.5	9.1
150	39	42	1.5	1.3	KS402_0200 EZ303U	90	140	20.00	20/1	4000	6000	0.45	6	8.5	9.6
214	12	13	1.0	4.2	KS402_0140 EZ301U	37	140	14.00	14/1	4000	6000	0.28	6	8.5	8.5
214	21	22	1.8	2.4	KS402_0140 EZ302U	67	140	14.00	14/1	4000	6000	0.38	6	8.5	9.1
214	28	29	2.3	1.9	KS402_0140 EZ303U	90	140	14.00	14/1	4000	6000	0.49	6	8.5	9.6
214	37	40	3.1	1.4	KS402_0140 EZ401U	90	140	14.00	14/1	4000	6000	1.0	6	8.5	11
300	15	16	2.6	3.4	KS402_0100 EZ302U	48	140	10.00	10/1	3800	6000	0.49	6	8.5	9.1
300	20	21	3.4	2.6	KS402_0100 EZ303U	67	140	10.00	10/1	3800	6000	0.60	6	8.5	9.6
300	27	29	4.7	1.9	KS402_0100 EZ401U	81	140	10.00	10/1	3800	6000	1.1	6	8.5	11
300	41	45	7.2	1.3	KS402_0100 EZ501U	90	140	10.00	10/1	3800	6000	3.1	6	8.5	12
300	45	49	7.8	1.2	KS402_0100 EZ402U	90	140	10.00	10/1	3800	6000	1.8	6	8.5	12
375	12	13	3.5	4.3	KS402_0080 EZ302U	38	140	8.000	8/1	3500	6000	0.62	6	8.5	9.1
375	16	17	4.5	3.3	KS402_0080 EZ303U	53	140	8.000	8/1	3500	6000	0.73	6	8.5	9.6
375	21	23	6.1	2.4	KS402_0080 EZ401U	65	140	8.000	8/1	3500	6000	1.3	6	8.5	11
375	33	36	9.3	1.6	KS402_0080 EZ501U	90	140	8.000	8/1	3500	6000	3.2	6	8.5	12
375	36	40	10	1.4	KS402_0080 EZ402U	90	140	8.000	8/1	3500	6000	2.0	6	8.5	12
500	12	12	6.4	4.4	KS402_0060 EZ303U	40	140	6.000	6/1	3000	6000	1.1	6	8.5	9.6
500	16	17	8.6	3.2	KS402_0060 EZ401U	48	140	6.000	6/1	3000	6000	1.6	6	8.5	11
500	25	27	13	2.1	KS402_0060 EZ501U	90	140	6.000	6/1	3000	6000	3.6	6	8.5	12
500	27	30	14	1.9	KS402_0060 EZ402U	90	140	6.000	6/1	3000	6000	2.3	6	8.5	12
500	39	49	21	1.3	KS402_0060 EZ404U	90	140	6.000	6/1	3000	6000	3.7	6	8.5	14
500	42	46	23	1.2	KS402_0060 EZ502U	90	140	6.000	6/1	3000	6000	5.9	6	8.5	14
KS4 (n_{1N} = 6000 rpm, $M_{2acc,max}$ = 90 Nm)															
150	33	35	0.3	1.2	KS403_0400 EZ301U	90	140	40.00	40/1	3500	6000	0.26	6	8.5	9.0
188	26	28	0.5	1.5	KS403_0320 EZ301U	83	140	32.00	32/1	3500	6000	0.27	6	8.5	9.0
250	20	21	0.6	2.1	KS403_0240 EZ301U	62	140	24.00	24/1	3500	6000	0.29	6	8.5	9.0
250	33	37	1.1	1.2	KS403_0240 EZ302U	90	140	24.00	24/1	3500	6000	0.39	6	8.5	9.6
300	17	18	0.8	2.4	KS402_0200 EZ301U	53	140	20.00	20/1	4000	6000	0.24	6	8.5	8.5
300	29	32	1.4	1.4	KS402_0200 EZ302U	90	140	20.00	20/1	4000	6000	0.34	6	8.5	9.1
300	37	43	1.8	1.1	KS402_0200 EZ303U	90	140	20.00	20/1	4000	6000	0.45	6	8.5	9.6
429	12	13	1.2	3.5	KS402_0140 EZ301U	37	140	14.00	14/1	4000	6000	0.28	6	8.5	8.5
429	20	22	2.1	2.1	KS402_0140 EZ302U	67	140	14.00	14/1	4000	6000	0.38	6	8.5	9.1
429	26	30	2.7	1.6	KS402_0140 EZ303U	90	140	14.00	14/1	4000	6000	0.49	6	8.5	9.6
429	31	37	3.2	1.3	KS402_0140 EZ401U	90	140	14.00	14/1	4000	6000	1.0	6	8.5	11
600	8.5	9.0	1.9	4.8	KS402_0100 EZ301U	27	140	10.00	10/1	3800	6000	0.39	6	8.5	8.5
600	14	16	3.1	2.9	KS402_0100 EZ302U	48	140	10.00	10/1	3800	6000	0.49	6	8.5	9.1
600	19	21	4.1	2.2	KS402_0100 EZ303U	67	140	10.00	10/1	3800	6000	0.60	6	8.5	9.6
600	22	27	4.8	1.9	KS402_0100 EZ401U	81	140	10.00	10/1	3800	6000	1.1	6	8.5	11
600	32	42	7.1	1.3	KS402_0100 EZ501U	90	140	10.00	10/1	3800	6000	3.1	6	8.5	12
600	33	47	7.3	1.2	KS402_0100 EZ402U	90	140	10.00	10/1	3800	6000	1.8	6	8.5	12
750	11	13	4.1	3.6	KS402_0080 EZ302U	38	140	8.000	8/1	3500	6000	0.62	6	8.5	9.1
750	15	17	5.4	2.7	KS402_0080 EZ303U	53	140	8.000	8/1	3500	6000	0.73	6	8.5	9.6
750	17	21	6.3	2.3	KS402_0080 EZ401U	65	140	8.000	8/1	3500	6000	1.3	6	8.5	11
750	26	33	9.3	1.6	KS402_0080 EZ501U	90	140	8.000	8/1	3500	6000	3.2	6	8.5	12

n_{2N} [rpm]	M_{2N} [Nm]	$M_{2,0}$ [Nm]	a_{th}	S	Type	M_{2acc} [Nm]	M_{2NOT} [Nm]	i	i_{exakt}	n_{1max} DB [rpm]	n_{1max} ZB [rpm]	J_1 [kgcm²]	$\Delta\varphi_2$ [arcmin]	C_2 [Nm/arcmin]	m [kg]
KS4 (n_{1N} = 6000 rpm, $M_{2acc,max}$ = 90 Nm)															
750	27	37	9.6	1.5	KS402_0080 EZ402U	90	140	8.000	8/1	3500	6000	2.0	6	8.5	12
750	40	59	14	1.0	KS402_0080 EZ502U	90	140	8.000	8/1	3500	6000	5.5	6	8.5	14
1000	8.6	9.6	5.8	4.8	KS402_0060 EZ302U	29	140	6.000	6/1	3000	6000	0.97	6	8.5	9.1
1000	11	13	7.6	3.7	KS402_0060 EZ303U	40	140	6.000	6/1	3000	6000	1.1	6	8.5	9.6
1000	13	16	8.9	3.1	KS402_0060 EZ401U	48	140	6.000	6/1	3000	6000	1.6	6	8.5	11
1000	19	25	13	2.1	KS402_0060 EZ501U	90	140	6.000	6/1	3000	6000	3.6	6	8.5	12
1000	20	28	14	2.1	KS402_0060 EZ402U	90	140	6.000	6/1	3000	6000	2.3	6	8.5	12
1000	30	44	20	1.4	KS402_0060 EZ502U	90	140	6.000	6/1	3000	6000	5.9	6	8.5	14
1000	33	48	22	1.2	KS402_0060 EZ404U	90	140	6.000	6/1	3000	6000	3.7	6	8.5	14
1000	35	60	24	1.2	KS402_0060 EZ503U	90	140	6.000	6/1	3000	6000	8.3	6	8.5	15
KS5 (n_{1N} = 3000 rpm, $M_{2acc,max}$ = 200 Nm)															
30	86	88	0.1	1.1	KS503_1000 EZ301U	200	300	100.0	100/1	4200	6000	0.22	5	17	15
38	69	71	0.1	1.4	KS503_0800 EZ301U	200	300	80.00	80/1	4200	6000	0.22	5	17	15
43	61	62	0.1	1.6	KS503_0700 EZ301U	180	300	70.00	70/1	4200	6000	0.24	5	17	15
60	43	44	0.1	2.3	KS503_0500 EZ301U	130	300	50.00	50/1	3500	6000	0.31	5	17	15
60	74	78	0.2	1.3	KS503_0500 EZ302U	200	300	50.00	50/1	3500	6000	0.41	5	17	15
60	96	102	0.3	1.0	KS503_0500 EZ303U	200	300	50.00	50/1	3500	6000	0.52	5	17	16
75	35	35	0.2	2.9	KS503_0400 EZ301U	100	300	40.00	40/1	3100	6000	0.39	5	17	15
75	59	62	0.3	1.7	KS503_0400 EZ302U	190	300	40.00	40/1	3100	6000	0.49	5	17	15
75	77	81	0.4	1.3	KS503_0400 EZ303U	200	300	40.00	40/1	3100	6000	0.60	5	17	16
94	28	28	0.2	3.6	KS503_0320 EZ301U	83	300	32.00	32/1	3100	6000	0.41	5	17	15
94	47	50	0.4	2.1	KS503_0320 EZ302U	150	300	32.00	32/1	3100	6000	0.51	5	17	15
94	62	65	0.5	1.6	KS503_0320 EZ303U	200	300	32.00	32/1	3100	6000	0.62	5	17	16
94	83	89	0.7	1.2	KS503_0320 EZ401U	200	300	32.00	32/1	3100	6000	1.2	5	17	17
125	21	21	0.3	4.8	KS503_0240 EZ301U	62	300	24.00	24/1	3100	6000	0.45	5	17	15
125	35	37	0.6	2.8	KS503_0240 EZ302U	110	300	24.00	24/1	3100	6000	0.55	5	17	15
125	46	49	0.7	2.1	KS503_0240 EZ303U	160	300	24.00	24/1	3100	6000	0.66	5	17	16
125	62	67	1.0	1.6	KS503_0240 EZ401U	190	300	24.00	24/1	3100	6000	1.2	5	17	17
125	96	105	1.5	1.0	KS503_0240 EZ501U	200	300	24.00	24/1	3100	6000	3.2	5	17	18
150	53	57	1.2	1.9	KS502_0200 EZ401U	160	300	20.00	20/1	3500	6000	1.0	5	17	16
150	82	89	1.9	1.2	KS502_0200 EZ501U	200	300	20.00	20/1	3500	6000	3.0	5	17	17
150	89	99	2.1	1.1	KS502_0200 EZ402U	200	300	20.00	20/1	3500	6000	1.7	5	17	17
214	37	40	1.9	2.7	KS502_0140 EZ401U	110	300	14.00	14/1	3200	6000	1.2	5	17	16
214	57	63	2.9	1.7	KS502_0140 EZ501U	200	300	14.00	14/1	3200	6000	3.2	5	17	17
214	63	69	3.2	1.6	KS502_0140 EZ402U	200	300	14.00	14/1	3200	6000	1.9	5	17	17
214	92	114	4.7	1.1	KS502_0140 EZ404U	200	300	14.00	14/1	3200	6000	3.3	5	17	19
214	98	106	5.0	1.0	KS502_0140 EZ502U	200	300	14.00	14/1	3200	6000	5.5	5	17	18
214	98	110	5.0	1.0	KS502_0140 EZ701U	200	300	14.00	14/1	3200	6000	8.8	5	17	20
300	27	29	2.9	3.7	KS502_0100 EZ401U	81	300	10.00	10/1	3000	6000	1.6	5	17	16
300	41	45	4.4	2.4	KS502_0100 EZ501U	150	300	10.00	10/1	3000	6000	3.5	5	17	17
300	45	49	4.8	2.2	KS502_0100 EZ402U	150	300	10.00	10/1	3000	6000	2.3	5	17	17
300	66	82	7.0	1.5	KS502_0100 EZ404U	200	300	10.00	10/1	3000	6000	3.6	5	17	19
300	70	76	7.6	1.4	KS502_0100 EZ502U	200	300	10.00	10/1	3000	6000	5.8	5	17	18
300	70	79	7.6	1.4	KS502_0100 EZ701U	190	300	10.00	10/1	3000	6000	9.1	5	17	20
300	92	105	9.9	1.1	KS502_0100 EZ503U	200	300	10.00	10/1	3000	6000	8.2	5	17	20
375	21	23	3.7	4.7	KS502_0080 EZ401U	65	300	8.000	8/1	2800	6000	1.9	5	17	16
375	33	36	5.7	3.0	KS502_0080 EZ501U	120	300	8.000	8/1	2800	6000	3.9	5	17	17
375	36	40	6.3	2.8	KS502_0080 EZ402U	120	300	8.000	8/1	2800	6000	2.6	5	17	17
375	52	65	9.2	1.9	KS502_0080 EZ404U	200	300	8.000	8/1	2800	6000	4.0	5	17	19
375	56	61	9.9	1.8	KS502_0080 EZ502U	200	300	8.000	8/1	2800	6000	6.2	5	17	18
375	56	63	9.9	1.8	KS502_0080 EZ701U	150	300	8.000	8/1	2800	6000	9.5	5	17	20
375	74	84	13	1.3	KS502_0080 EZ503U	200	300	8.000	8/1	2800	6000	8.6	5	17	20
375	91	109	16	1.1	KS502_0080 EZ702U	200	300	8.000	8/1	2800	6000	15	5	17	22
500	25	27	9.2	3.6	KS502_0060 EZ501U	91	300	6.000	6/1	2500	5500	4.5	5	17	17
500	27	30	10	3.3	KS502_0060 EZ402U	91	300	6.000	6/1	2500	5500	3.3	5	17	17
500	39	49	15	2.2	KS502_0060 EZ404U	170	300	6.000	6/1	2500	5500	4.6	5	17	19
500	42	46	16	2.1	KS502_0060 EZ502U	180	300	6.000	6/1	2500	5500	6.8	5	17	18
500	42	47	16	2.1	KS502_0060 EZ701U	110	300	6.000	6/1	2500	5500	10	5	17	20
500	55	63	21	1.6	KS502_0060 EZ503U	200	300	6.000	6/1	2500	5500	9.2	5	17	20
500	68	82	26	1.3	KS502_0060 EZ702U	200	300	6.000	6/1	2500	5500	15	5	17	22
500	77	91	29	1.1	KS502_0060 EZ505U	200	300	6.000	6/1	2500	5500	14	5	17	22

n_{2N} [rpm]	M_{2N} [Nm]	$M_{2,0}$ [Nm]	a_{th}	S	Type	M_{2acc} [Nm]	M_{2NOT} [Nm]	i	i_{exakt}	n_{1max} DB [rpm]	n_{1max} ZB [rpm]	J_1 [kgcm²]	$\Delta\varphi_2$ [arcmin]	C_2 [Nm/arcmin]	m [kg]
KS5 (n_{1N} = 4500 rpm, $M_{2acc,max}$ = 200 Nm)															
563	72	116	15	1.2	KS502_0080 EZ505U	200	300	8.000	8/1	2800	6000	13	5	17	22
750	54	87	23	1.4	KS502_0060 EZ505U	200	300	6.000	6/1	2500	5500	14	5	17	22
750	69	114	30	1.1	KS502_0060 EZ703U	200	300	6.000	6/1	2500	5500	23	5	17	24
KS5 (n_{1N} = 6000 rpm, $M_{2acc,max}$ = 200 Nm)															
75	66	71	0.1	1.2	KS503_0800 EZ301U	200	300	80.00	80/1	4200	6000	0.22	5	17	15
86	58	62	0.1	1.4	KS503_0700 EZ301U	180	300	70.00	70/1	4200	6000	0.24	5	17	15
120	41	44	0.2	1.9	KS503_0500 EZ301U	130	300	50.00	50/1	3500	6000	0.31	5	17	15
120	70	78	0.3	1.1	KS503_0500 EZ302U	200	300	50.00	50/1	3500	6000	0.41	5	17	15
150	33	35	0.2	2.4	KS503_0400 EZ301U	100	300	40.00	40/1	3100	6000	0.39	5	17	15
150	56	62	0.4	1.4	KS503_0400 EZ302U	190	300	40.00	40/1	3100	6000	0.49	5	17	15
150	73	84	0.5	1.1	KS503_0400 EZ303U	200	300	40.00	40/1	3100	6000	0.60	5	17	16
188	26	28	0.3	3.0	KS503_0320 EZ301U	83	300	32.00	32/1	3100	6000	0.41	5	17	15
188	45	50	0.5	1.8	KS503_0320 EZ302U	150	300	32.00	32/1	3100	6000	0.51	5	17	15
188	58	67	0.6	1.4	KS503_0320 EZ303U	200	300	32.00	32/1	3100	6000	0.62	5	17	16
188	68	83	0.7	1.2	KS503_0320 EZ401U	200	300	32.00	32/1	3100	6000	1.2	5	17	17
250	20	21	0.4	4.0	KS503_0240 EZ301U	62	300	24.00	24/1	3100	6000	0.45	5	17	15
250	33	37	0.7	2.4	KS503_0240 EZ302U	110	300	24.00	24/1	3100	6000	0.55	5	17	15
250	44	50	0.9	1.8	KS503_0240 EZ303U	160	300	24.00	24/1	3100	6000	0.66	5	17	16
250	51	62	1.0	1.5	KS503_0240 EZ401U	190	300	24.00	24/1	3100	6000	1.2	5	17	17
250	76	98	1.5	1.0	KS503_0240 EZ501U	200	300	24.00	24/1	3100	6000	3.2	5	17	18
250	78	109	1.5	1.0	KS503_0240 EZ402U	200	300	24.00	24/1	3100	6000	1.9	5	17	18
300	44	53	1.3	1.8	KS502_0200 EZ401U	160	300	20.00	20/1	3500	6000	1.0	5	17	16
300	65	84	1.9	1.2	KS502_0200 EZ501U	200	300	20.00	20/1	3500	6000	3.0	5	17	17
300	67	93	2.0	1.2	KS502_0200 EZ402U	200	300	20.00	20/1	3500	6000	1.7	5	17	17
429	31	37	2.0	2.6	KS502_0140 EZ401U	110	300	14.00	14/1	3200	6000	1.2	5	17	16
429	45	59	2.9	1.7	KS502_0140 EZ501U	200	300	14.00	14/1	3200	6000	3.2	5	17	17
429	47	65	3.0	1.7	KS502_0140 EZ402U	200	300	14.00	14/1	3200	6000	1.9	5	17	17
429	69	104	4.5	1.1	KS502_0140 EZ502U	200	300	14.00	14/1	3200	6000	5.5	5	17	18
429	69	105	4.5	1.1	KS502_0140 EZ701U	200	300	14.00	14/1	3200	6000	8.8	5	17	20
429	77	112	5.0	1.0	KS502_0140 EZ404U	200	300	14.00	14/1	3200	6000	3.3	5	17	19
600	22	27	3.0	3.6	KS502_0100 EZ401U	81	300	10.00	10/1	3000	6000	1.6	5	17	16
600	32	42	4.4	2.4	KS502_0100 EZ501U	150	300	10.00	10/1	3000	6000	3.5	5	17	17
600	33	47	4.5	2.4	KS502_0100 EZ402U	150	300	10.00	10/1	3000	6000	2.3	5	17	17
600	49	74	6.7	1.6	KS502_0100 EZ502U	200	300	10.00	10/1	3000	6000	5.8	5	17	18
600	49	75	6.7	1.6	KS502_0100 EZ701U	190	300	10.00	10/1	3000	6000	9.1	5	17	20
600	55	80	7.5	1.4	KS502_0100 EZ404U	200	300	10.00	10/1	3000	6000	3.6	5	17	19
600	59	101	8.0	1.3	KS502_0100 EZ503U	200	300	10.00	10/1	3000	6000	8.2	5	17	20
600	68	136	9.3	1.2	KS502_0100 EZ702U	200	300	10.00	10/1	3000	6000	14	5	17	22
750	17	21	3.9	4.5	KS502_0080 EZ401U	65	300	8.000	8/1	2800	6000	1.9	5	17	16
750	26	33	5.7	3.0	KS502_0080 EZ501U	120	300	8.000	8/1	2800	6000	3.9	5	17	17
750	27	37	5.9	3.0	KS502_0080 EZ402U	120	300	8.000	8/1	2800	6000	2.6	5	17	17
750	40	59	8.7	2.0	KS502_0080 EZ502U	200	300	8.000	8/1	2800	6000	6.2	5	17	18
750	40	60	8.7	2.0	KS502_0080 EZ701U	150	300	8.000	8/1	2800	6000	9.5	5	17	20
750	44	64	9.7	1.8	KS502_0080 EZ404U	200	300	8.000	8/1	2800	6000	4.0	5	17	19
750	47	81	10	1.7	KS502_0080 EZ503U	200	300	8.000	8/1	2800	6000	8.6	5	17	20
750	55	109	12	1.4	KS502_0080 EZ702U	200	300	8.000	8/1	2800	6000	15	5	17	22
KS7 (n_{1N} = 3000 rpm, $M_{2acc,max}$ = 400 Nm)															
43	182	195	0.2	1.1	KS703_0700 EZ401U	400	600	70.00	70/1	3500	6000	1.1	4	42	30
60	130	140	0.3	1.5	KS703_0500 EZ401U	400	600	50.00	50/1	3200	6000	1.2	4	42	30
75	104	112	0.3	1.9	KS703_0400 EZ401U	320	600	40.00	40/1	3000	6000	1.4	4	42	30
75	160	175	0.5	1.2	KS703_0400 EZ501U	400	600	40.00	40/1	3000	6000	3.4	4	42	31
75	175	193	0.6	1.1	KS703_0400 EZ402U	400	600	40.00	40/1	3000	6000	2.1	4	42	31
94	83	89	0.5	2.4	KS703_0320 EZ401U	250	600	32.00	32/1	3000	6000	1.5	4	42	30
94	128	140	0.7	1.6	KS703_0320 EZ501U	400	600	32.00	32/1	3000	6000	3.5	4	42	31
94	140	155	0.8	1.4	KS703_0320 EZ402U	400	600	32.00	32/1	3000	6000	2.2	4	42	31
125	62	67	0.6	3.2	KS703_0240 EZ401U	190	600	24.00	24/1	3000	6000	1.7	4	42	30
125	96	105	1.0	2.1	KS703_0240 EZ501U	360	600	24.00	24/1	3000	6000	3.7	4	42	31
125	105	116	1.1	1.9	KS703_0240 EZ402U	360	600	24.00	24/1	3000	6000	2.4	4	42	31
125	154	192	1.6	1.3	KS703_0240 EZ404U	400	600	24.00	24/1	3000	6000	3.7	4	42	33
125	165	179	1.7	1.2	KS703_0240 EZ502U	400	600	24.00	24/1	3000	6000	6.0	4	42	33
125	165	185	1.7	1.2	KS703_0240 EZ701U	400	600	24.00	24/1	3000	6000	9.3	4	42	34
150	82	89	2.7	2.4	KS702_0200 EZ501U	300	600	20.00	20/1	3200	6000	3.3	4	42	28
150	141	152	4.6	1.4	KS702_0200 EZ502U	400	600	20.00	20/1	3200	6000	5.6	4	42	30
150	141	158	4.6	1.4	KS702_0200 EZ701U	380	600	20.00	20/1	3200	6000	8.9	4	42	31

n_{2N} [rpm]	M_{2N} [Nm]	$M_{2,0}$ [Nm]	a_{th}	S	Type	M_{2acc} [Nm]	M_{2NOT} [Nm]	i	i_{exakt}	n_{1max} DB [rpm]	n_{1max} ZB [rpm]	J_1 [kgcm²]	$\Delta\varphi_2$ [arcmin]	C_2 [Nm/arcmin]	m [kg]
KS7 (n_{1N} = 3000 rpm, $M_{2acc,max}$ = 400 Nm)															
150	184	211	6.0	1.1	KS702_0200 EZ503U	400	600	20.00	20/1	3200	6000	8.0	4	42	31
214	57	63	4.1	3.5	KS702_0140 EZ501U	210	600	14.00	14/1	3000	6000	3.8	4	42	28
214	98	106	7.0	2.0	KS702_0140 EZ502U	400	600	14.00	14/1	3000	6000	6.1	4	42	30
214	98	110	7.0	2.0	KS702_0140 EZ701U	270	600	14.00	14/1	3000	6000	9.4	4	42	31
214	129	148	9.2	1.5	KS702_0140 EZ503U	400	600	14.00	14/1	3000	6000	8.4	4	42	31
214	160	192	11	1.2	KS702_0140 EZ702U	400	600	14.00	14/1	3000	6000	15	4	42	34
214	180	213	13	1.1	KS702_0140 EZ505U	400	600	14.00	14/1	3000	6000	13	4	42	34
300	41	45	6.1	4.9	KS702_0100 EZ501U	150	600	10.00	10/1	2800	6000	4.7	4	42	28
300	70	76	10	2.8	KS702_0100 EZ502U	290	600	10.00	10/1	2800	6000	7.0	4	42	30
300	70	79	10	2.8	KS702_0100 EZ701U	190	600	10.00	10/1	2800	6000	10	4	42	31
300	92	105	14	2.2	KS702_0100 EZ503U	400	600	10.00	10/1	2800	6000	9.4	4	42	31
300	114	137	17	1.7	KS702_0100 EZ702U	390	600	10.00	10/1	2800	6000	16	4	42	34
300	128	152	19	1.5	KS702_0100 EZ505U	400	600	10.00	10/1	2800	6000	14	4	42	34
300	157	198	23	1.3	KS702_0100 EZ703U	400	600	10.00	10/1	2800	6000	23	4	42	36
375	56	61	14	3.5	KS702_0080 EZ502U	240	600	8.000	8/1	2500	5000	8.1	4	42	30
375	56	63	14	3.5	KS702_0080 EZ701U	150	600	8.000	8/1	2500	5000	11	4	42	31
375	74	84	18	2.7	KS702_0080 EZ503U	330	600	8.000	8/1	2500	5000	10	4	42	31
375	91	109	22	2.2	KS702_0080 EZ702U	310	600	8.000	8/1	2500	5000	17	4	42	34
375	103	122	25	1.9	KS702_0080 EZ505U	400	600	8.000	8/1	2500	5000	15	4	42	34
375	125	158	31	1.6	KS702_0080 EZ703U	400	600	8.000	8/1	2500	5000	25	4	42	36
375	162	230	39	1.2	KS702_0080 EZ705U	400	600	8.000	8/1	2500	5000	37	4	42	41
375	169	282	41	1.2	KS702_0080 EZ802U	400	600	8.000	8/1	2500	5000	61	4	42	50
500	42	46	19	4.7	KS702_0060 EZ502U	180	600	6.000	6/1	2100	4500	11	4	42	30
500	42	47	19	4.7	KS702_0060 EZ701U	110	600	6.000	6/1	2100	4500	14	4	42	31
500	55	63	25	3.6	KS702_0060 EZ503U	250	600	6.000	6/1	2100	4500	13	4	42	31
500	68	82	31	2.9	KS702_0060 EZ702U	230	600	6.000	6/1	2100	4500	19	4	42	34
500	77	91	35	2.6	KS702_0060 EZ505U	380	600	6.000	6/1	2100	4500	18	4	42	34
500	94	119	43	2.1	KS702_0060 EZ703U	370	600	6.000	6/1	2100	4500	27	4	42	36
500	121	172	56	1.6	KS702_0060 EZ705U	400	600	6.000	6/1	2100	4500	40	4	42	41
500	127	211	58	1.6	KS702_0060 EZ802U	400	600	6.000	6/1	2100	4500	64	4	42	50
KS7 (n_{1N} = 4500 rpm, $M_{2acc,max}$ = 400 Nm)															
321	126	203	10	1.4	KS702_0140 EZ505U	400	600	14.00	14/1	3000	6000	13	4	42	34
321	161	266	13	1.1	KS702_0140 EZ703U	400	600	14.00	14/1	3000	6000	22	4	42	36
450	90	145	15	1.9	KS702_0100 EZ505U	400	600	10.00	10/1	2800	6000	14	4	42	34
450	115	190	20	1.5	KS702_0100 EZ703U	400	600	10.00	10/1	2800	6000	23	4	42	36
450	156	285	27	1.1	KS702_0100 EZ705U	400	600	10.00	10/1	2800	6000	36	4	42	41
563	72	116	20	2.4	KS702_0080 EZ505U	400	600	8.000	8/1	2500	5000	15	4	42	34
563	80	262	22	2.2	KS702_0080 EZ802U	400	600	8.000	8/1	2500	5000	61	4	42	50
563	92	152	26	1.9	KS702_0080 EZ703U	400	600	8.000	8/1	2500	5000	25	4	42	36
563	125	228	35	1.4	KS702_0080 EZ705U	400	600	8.000	8/1	2500	5000	37	4	42	41
750	54	87	28	3.2	KS702_0060 EZ505U	380	600	6.000	6/1	2100	4500	18	4	42	34
750	60	197	31	2.9	KS702_0060 EZ802U	400	600	6.000	6/1	2100	4500	64	4	42	50
750	69	114	36	2.5	KS702_0060 EZ703U	370	600	6.000	6/1	2100	4500	27	4	42	36
750	93	171	49	1.9	KS702_0060 EZ705U	400	600	6.000	6/1	2100	4500	40	4	42	41
KS7 (n_{1N} = 6000 rpm, $M_{2acc,max}$ = 400 Nm)															
86	150	182	0.2	1.1	KS703_0700 EZ401U	400	600	70.00	70/1	3500	6000	1.1	4	42	30
120	107	130	0.3	1.5	KS703_0500 EZ401U	400	600	50.00	50/1	3200	6000	1.2	4	42	30
150	86	104	0.4	1.8	KS703_0400 EZ401U	320	600	40.00	40/1	3000	6000	1.4	4	42	30
150	126	164	0.5	1.2	KS703_0400 EZ501U	400	600	40.00	40/1	3000	6000	3.4	4	42	31
150	130	182	0.5	1.2	KS703_0400 EZ402U	400	600	40.00	40/1	3000	6000	2.1	4	42	31
188	68	83	0.5	2.3	KS703_0320 EZ401U	250	600	32.00	32/1	3000	6000	1.5	4	42	30
188	101	131	0.7	1.6	KS703_0320 EZ501U	400	600	32.00	32/1	3000	6000	3.5	4	42	31
188	104	146	0.7	1.5	KS703_0320 EZ402U	400	600	32.00	32/1	3000	6000	2.2	4	42	31
188	155	232	1.1	1.0	KS703_0320 EZ502U	400	600	32.00	32/1	3000	6000	5.8	4	42	33
188	155	235	1.1	1.0	KS703_0320 EZ701U	400	600	32.00	32/1	3000	6000	9.1	4	42	34
250	51	62	0.7	3.1	KS703_0240 EZ401U	190	600	24.00	24/1	3000	6000	1.7	4	42	30
250	76	98	1.0	2.1	KS703_0240 EZ501U	360	600	24.00	24/1	3000	6000	3.7	4	42	31
250	78	109	1.0	2.0	KS703_0240 EZ402U	360	600	24.00	24/1	3000	6000	2.4	4	42	31
250	116	174	1.5	1.4	KS703_0240 EZ502U	400	600	24.00	24/1	3000	6000	6.0	4	42	33
250	116	176	1.5	1.4	KS703_0240 EZ701U	400	600	24.00	24/1	3000	6000	9.3	4	42	34
250	129	187	1.7	1.2	KS703_0240 EZ404U	400	600	24.00	24/1	3000	6000	3.7	4	42	33
250	138	237	1.8	1.1	KS703_0240 EZ503U	400	600	24.00	24/1	3000	6000	8.3	4	42	34
300	65	84	2.6	2.4	KS702_0200 EZ501U	300	600	20.00	20/1	3200	6000	3.3	4	42	28
300	99	148	4.0	1.6	KS702_0200 EZ502U	400	600	20.00	20/1	3200	6000	5.6	4	42	30

n_{2N} [rpm]	M_{2N} [Nm]	$M_{2,0}$ [Nm]	a_{th}	S	Type	M_{2acc} [Nm]	M_{2NOT} [Nm]	i	i_{exakt}	n_{1max} DB [rpm]	n_{1max} ZB [rpm]	J_1 [kgcm²]	$\Delta\varphi_2$ [arcmin]	C_2 [Nm/arcmin]	m [kg]
KS7 (n_{1N} = 6000 rpm, $M_{2acc,max}$ = 400 Nm)															
300	99	150	4.0	1.6	KS702_0200 EZ701U	380	600	20.00	20/1	3200	6000	8.9	4	42	31
300	118	201	4.8	1.3	KS702_0200 EZ503U	400	600	20.00	20/1	3200	6000	8.0	4	42	31
300	137	272	5.6	1.2	KS702_0200 EZ702U	400	600	20.00	20/1	3200	6000	14	4	42	34
429	45	59	4.1	3.5	KS702_0140 EZ501U	210	600	14.00	14/1	3000	6000	3.8	4	42	28
429	69	104	6.2	2.3	KS702_0140 EZ502U	400	600	14.00	14/1	3000	6000	6.1	4	42	30
429	69	105	6.2	2.3	KS702_0140 EZ701U	270	600	14.00	14/1	3000	6000	9.4	4	42	31
429	82	141	7.4	1.9	KS702_0140 EZ503U	400	600	14.00	14/1	3000	6000	8.4	4	42	31
429	96	190	8.6	1.6	KS702_0140 EZ702U	400	600	14.00	14/1	3000	6000	15	4	42	34
600	32	42	6.1	4.9	KS702_0100 EZ501U	150	600	10.00	10/1	2800	6000	4.7	4	42	28
600	49	74	9.3	3.2	KS702_0100 EZ502U	290	600	10.00	10/1	2800	6000	7.0	4	42	30
600	49	75	9.3	3.2	KS702_0100 EZ701U	190	600	10.00	10/1	2800	6000	10	4	42	31
600	59	101	11	2.7	KS702_0100 EZ503U	400	600	10.00	10/1	2800	6000	9.4	4	42	31
600	68	136	13	2.3	KS702_0100 EZ702U	390	600	10.00	10/1	2800	6000	16	4	42	34

9.3 Dimensional drawings

In this chapter you can find the dimensions of the geared motors.

There is a dimensional drawing for every possible shaft/housing design, each with the tables for gear unit dimensions, motor dimensions and geared motor dimensions.

Dimensions can exceed the specifications of ISO 2768-mK due to casting tolerances or accumulation of individual tolerances.

We reserve the right to make dimensional changes due to ongoing technical development.

You can download 3D models of our standard drives at http://configurator.stoeber.de.

Combination options and the dimensions of forced ventilated geared motors can also be found at http://configurator.stoeber.de.

Tolerances

Solid shaft	Tolerance
Shaft ∅ fit ≤ 50 mm	DIN 748-1, ISO k6
Shaft ∅ fit > 50 mm	DIN 748-1, ISO m6
Feather keys	DIN 6885-1, high form A

Hollow shaft	Tolerance
Hollow shaft hole fit	ISO H7
Feather keys	DIN 6885-1, high form

Centering holes in solid shafts in accordance with DIN 332-2, DR shape

Thread size	M8	M12	M16
Thread depth	19	28	36

9.3.1 F shaft design (flange hollow shaft)

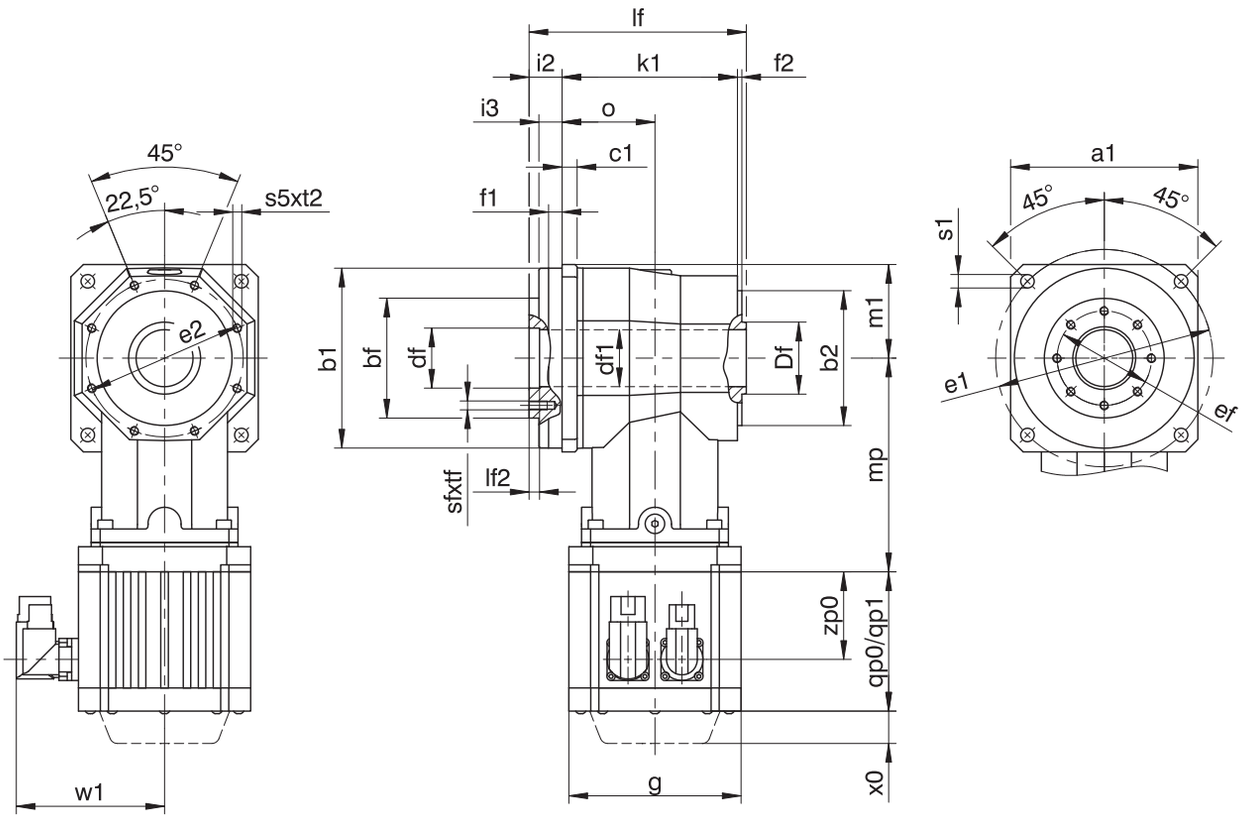

KS4

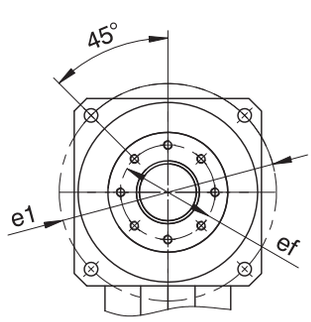

KS5

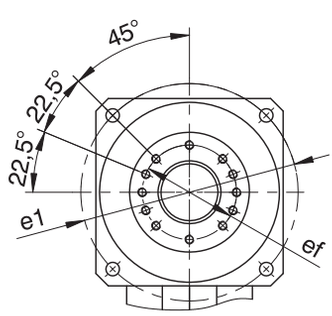

KS7

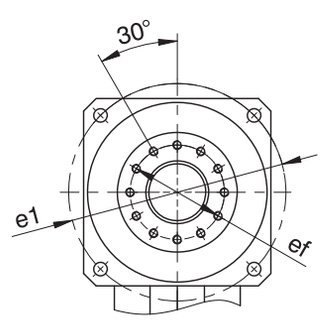

qp0	Applies to motors without brake.	qp1	Applies to motors with brake.
x0	Applies to encoders using an optical measuring method.	w1	Different for the One Cable Solution (OCS), see the chapter [▸ 17.4]

Dimensions of gear units

Type	□a1	Øb1	Øb2	bf	c1	Ødf	Ødf1	ØDf	Øe1	Øe2	ef	f1	f2	i2	i3	k1	lf	lf2	m1	o	Øs1	s5	sf	t2	tf
KS402	101	95_{h6}	75_{h6}	63_{h7}	10	31.5^{H7}	30	40_{d9}	120	88	50	8	3	20	14.0	104	127	6.0	50.5	53	6.6	M5	M6	9	11
KS403	101	95_{h6}	75_{h6}	63_{h7}	10	31.5^{H7}	30	40_{d9}	120	88	50	8	3	20	14.0	104	127	6.0	50.5	53	6.6	M5	M6	9	11
KS502	125	120_{h6}	90_{h6}	80_{h7}	10	40.0^{H7}	38	48_{d9}	145	105	63	9	3	22	15.5	120	145	6.5	62.5	62	9.0	M6	M6	11	12
KS503	125	120_{h6}	90_{h6}	80_{h7}	10	40.0^{H7}	38	48_{d9}	145	105	63	9	3	22	15.5	120	145	6.5	62.5	62	9.0	M6	M6	11	12
KS702	155	150_{h6}	110_{h6}	100_{h7}	15	50.0^{H7}	49	60_{d9}	180	130	80	10	3	27	20.0	148	178	7.0	77.5	78	11.0	M8	M8	14	15
KS703	155	150_{h6}	110_{h6}	100_{h7}	15	50.0^{H7}	49	60_{d9}	180	130	80	10	3	27	20.0	148	178	7.0	77.5	78	11.0	M8	M8	14	15

Dimensions of motors

Type	□g	qp0	qp1	w1	x0	zp0
EZ301U	72	90	130.0	55.5	21	54.5
EZ302U	72	112	152.0	55.5	21	76.5
EZ303U	72	134	174.0	55.5	21	98.5
EZ401U	98	98	146.5	91.0	22	56.0
EZ402U	98	123	171.5	91.0	22	81.0
EZ404U	98	173	221.5	91.0	22	131.0
EZ501U	115	93	147.5	100.0	22	58.5
EZ502U	115	118	172.5	100.0	22	83.5
EZ503U	115	143	197.5	100.0	22	108.5
EZ505U	115	193	247.5	100.0	22	158.5
EZ701U	145	102	161.0	115.0	22	64.0
EZ702U	145	127	186.0	115.0	22	89.0
EZ703U	145	152	211.0	115.0	22	114.0
EZ705U	145	207	266.0	134.0	22	165.0
EZ802U	190	197	274.0	156.5	22	143.0

Dimensions of geared motors

Type	EZ3	EZ4	EZ5	EZ7	EZ8
	mp	mp	mp	mp	mp
KS402	124.0	120.5	123.0	–	–
KS403	204.0	–	–	–	–
KS502	–	140.0	142.5	148.5	–
KS503	241.0	237.5	240.0	–	–
KS702	–	–	167.0	173.0	188.0
KS703	–	277.0	279.5	285.5	–

9.3.2 S shaft design (hollow shaft with shrink disk)

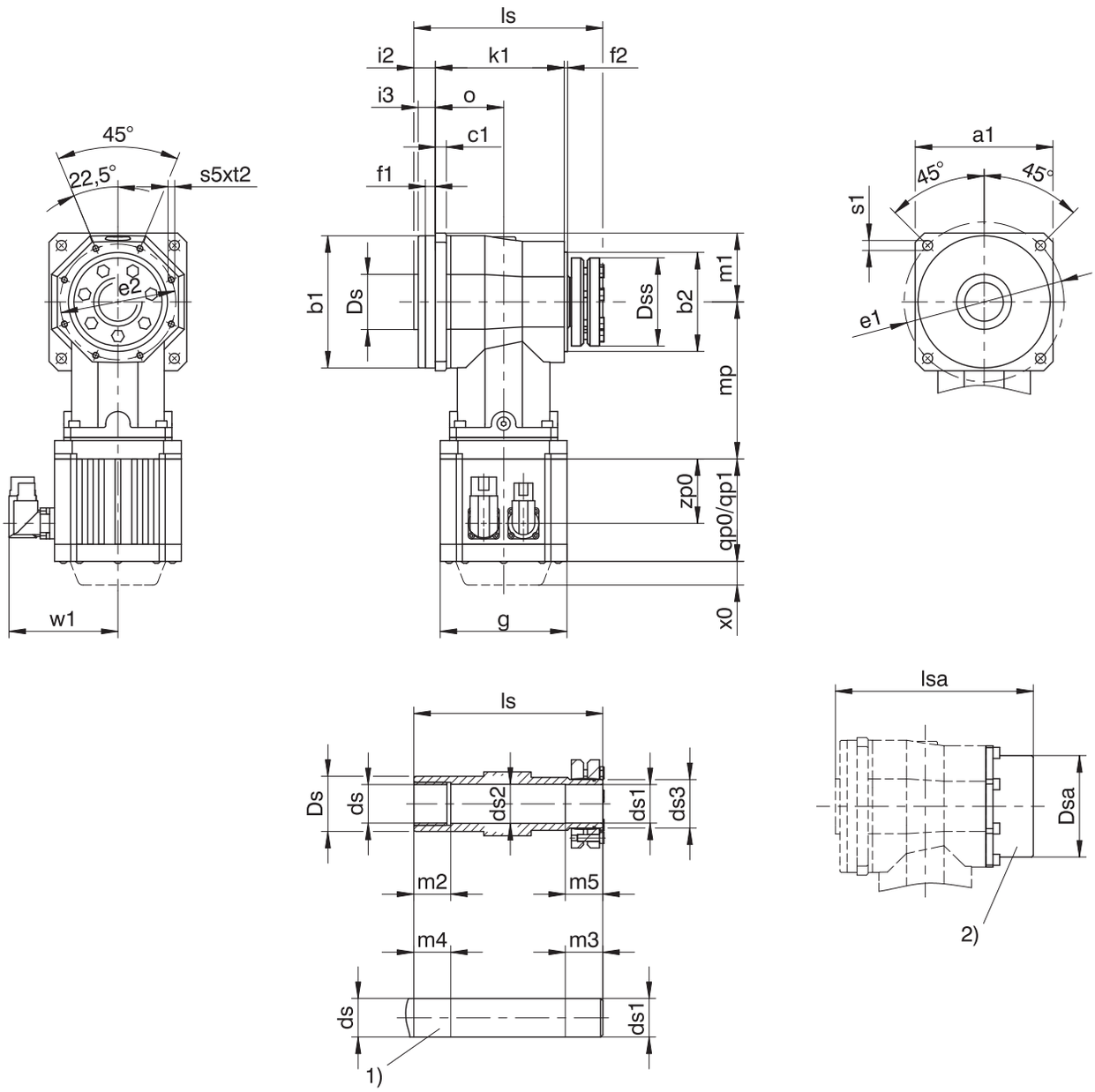

qp0	Applies to motors without brake.	qp1	Applies to motors with brake.
x0	Applies to encoders using an optical measuring method.	w1	Different for the One Cable Solution (OCS), see the chapter [▶ 17.4]
1)	Machine shaft: The dimension ls must be met.	2)	Cover (optional)

Dimensions of gear units

Type	□a1	Øb1	Øb2	c1	Øds	Øds1	Øds2	Øds3	ØDs	ØDsa	ØDss	Øe1	Øe2	f1	f2	i2	i3	k1	ls	lsa	m1	m2	m3	m4	m5	o	Øs1	s5	t2
KS402	101	95_{h6}	75_{h6}	10	25_{h6}	25_{h6}^{H7}	25.5	30	40	72	60	120	88	8	3	18.0	14.0	104	151.0	158.0	50.5	20	34	25	29	53	6.6	M5	9
KS403	101	95_{h6}	75_{h6}	10	25_{h6}	25_{h6}^{H7}	25.5	30	40	72	60	120	88	8	3	18.0	14.0	104	151.0	158.0	50.5	20	34	25	29	53	6.6	M5	9
KS502	125	120_{h6}	90_{h6}	10	35_{h6}	35_{h6}^{H7}	35.5	44	50	92	80	145	105	9	3	19.5	15.5	120	171.5	179.5	62.5	30	39	35	34	62	9.0	M6	11
KS503	125	120_{h6}	90_{h6}	10	35_{h6}	35_{h6}^{H7}	35.5	44	50	92	80	145	105	9	3	19.5	15.5	120	171.5	179.5	62.5	30	39	35	34	62	9.0	M6	11
KS702	155	150_{h6}	110_{h6}	15	45_{h6}	45_{h6}^{H7}	45.5	55	65	112	100	180	130	10	3	24.0	20.0	148	211.0	218.0	77.5	40	42	45	37	78	11.0	M8	14
KS703	155	150_{h6}	110_{h6}	15	45_{h6}	45_{h6}^{H7}	45.5	55	65	112	100	180	130	10	3	24.0	20.0	148	211.0	218.0	77.5	40	42	45	37	78	11.0	M8	14

Dimensions of motors

Type	□g	qp0	qp1	w1	x0	zp0
EZ301U	72	90	130.0	55.5	21	54.5
EZ302U	72	112	152.0	55.5	21	76.5
EZ303U	72	134	174.0	55.5	21	98.5
EZ401U	98	98	146.5	91.0	22	56.0
EZ402U	98	123	171.5	91.0	22	81.0
EZ404U	98	173	221.5	91.0	22	131.0
EZ501U	115	93	147.5	100.0	22	58.5
EZ502U	115	118	172.5	100.0	22	83.5
EZ503U	115	143	197.5	100.0	22	108.5
EZ505U	115	193	247.5	100.0	22	158.5
EZ701U	145	102	161.0	115.0	22	64.0
EZ702U	145	127	186.0	115.0	22	89.0
EZ703U	145	152	211.0	115.0	22	114.0
EZ705U	145	207	266.0	134.0	22	165.0
EZ802U	190	197	274.0	156.5	22	143.0

Dimensions of geared motors

Type	EZ3	EZ4	EZ5	EZ7	EZ8
	mp	mp	mp	mp	mp
KS402	124.0	120.5	123.0	–	–
KS403	204.0	–	–	–	–
KS502	–	140.0	142.5	148.5	–
KS503	241.0	237.5	240.0	–	–
KS702	–	–	167.0	173.0	188.0
KS703	–	277.0	279.5	285.5	–

9.3.3 G shaft design (solid shaft without feather key)

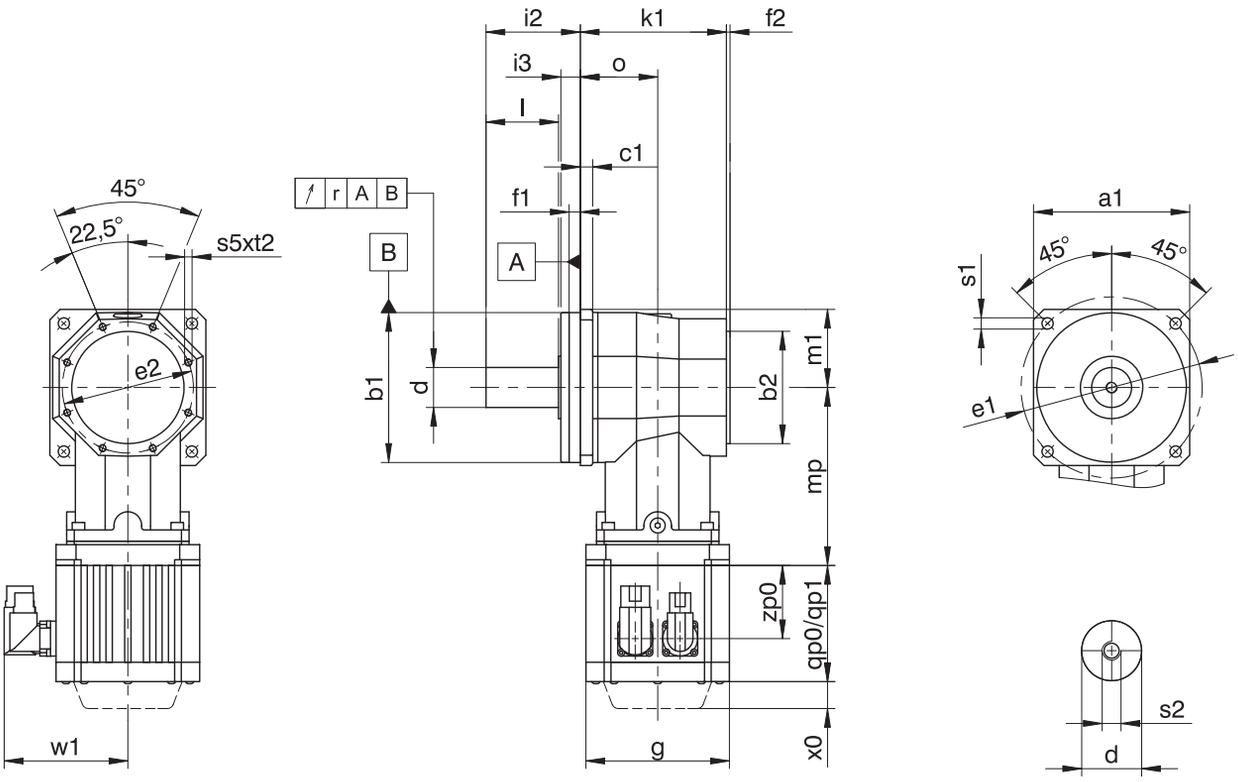

qp0	Applies to motors without brake.	qp1	Applies to motors with brake.
x0	Applies to encoders using an optical measuring method.	w1	Different for the One Cable Solution (OCS), see the chapter [▸ 17.4]

Dimensions of gear units

Type	□a1	Øb1	Øb2	c1	Ød	Øe1	Øe2	f1	f2	i2	i3	l	k1	m1	o	r	Øs1	s2	s5	t2
KS402	101	95_{h6}	75_{h6}	10	22_{k6}	120	88	8	3	52.0	14.0	36	104	50.5	53	0.020	6.6	M8	M5	9
KS403	101	95_{h6}	75_{h6}	10	22_{k6}	120	88	8	3	52.0	14.0	36	104	50.5	53	0.020	6.6	M8	M5	9
KS502	125	120_{h6}	90_{h6}	10	32_{k6}	145	105	9	3	75.5	15.5	58	120	62.5	62	0.020	9.0	M12	M6	11
KS503	125	120_{h6}	90_{h6}	10	32_{k6}	145	105	9	3	75.5	15.5	58	120	62.5	62	0.020	9.0	M12	M6	11
KS702	155	150_{h6}	110_{h6}	15	40_{k6}	180	130	10	3	105.0	20.0	82	148	77.5	78	0.025	11.0	M16	M8	14
KS703	155	150_{h6}	110_{h6}	15	40_{k6}	180	130	10	3	105.0	20.0	82	148	77.5	78	0.025	11.0	M16	M8	14

Dimensions of motors

Type	□g	qp0	qp1	w1	x0	zp0
EZ301U	72	90	130.0	55.5	21	54.5
EZ302U	72	112	152.0	55.5	21	76.5
EZ303U	72	134	174.0	55.5	21	98.5
EZ401U	98	98	146.5	91.0	22	56.0
EZ402U	98	123	171.5	91.0	22	81.0
EZ404U	98	173	221.5	91.0	22	131.0
EZ501U	115	93	147.5	100.0	22	58.5
EZ502U	115	118	172.5	100.0	22	83.5
EZ503U	115	143	197.5	100.0	22	108.5
EZ505U	115	193	247.5	100.0	22	158.5
EZ701U	145	102	161.0	115.0	22	64.0
EZ702U	145	127	186.0	115.0	22	89.0
EZ703U	145	152	211.0	115.0	22	114.0
EZ705U	145	207	266.0	134.0	22	165.0
EZ802U	190	197	274.0	156.5	22	143.0

Dimensions of geared motors

Type	EZ3	EZ4	EZ5	EZ7	EZ8
	mp	mp	mp	mp	mp
KS402	124.0	120.5	123.0	–	–
KS403	204.0	–	–	–	–
KS502	–	140.0	142.5	148.5	–
KS503	241.0	237.5	240.0	–	–
KS702	–	–	167.0	173.0	188.0
KS703	–	277.0	279.5	285.5	–

9.3.4 P shaft design (solid shaft with feather key)

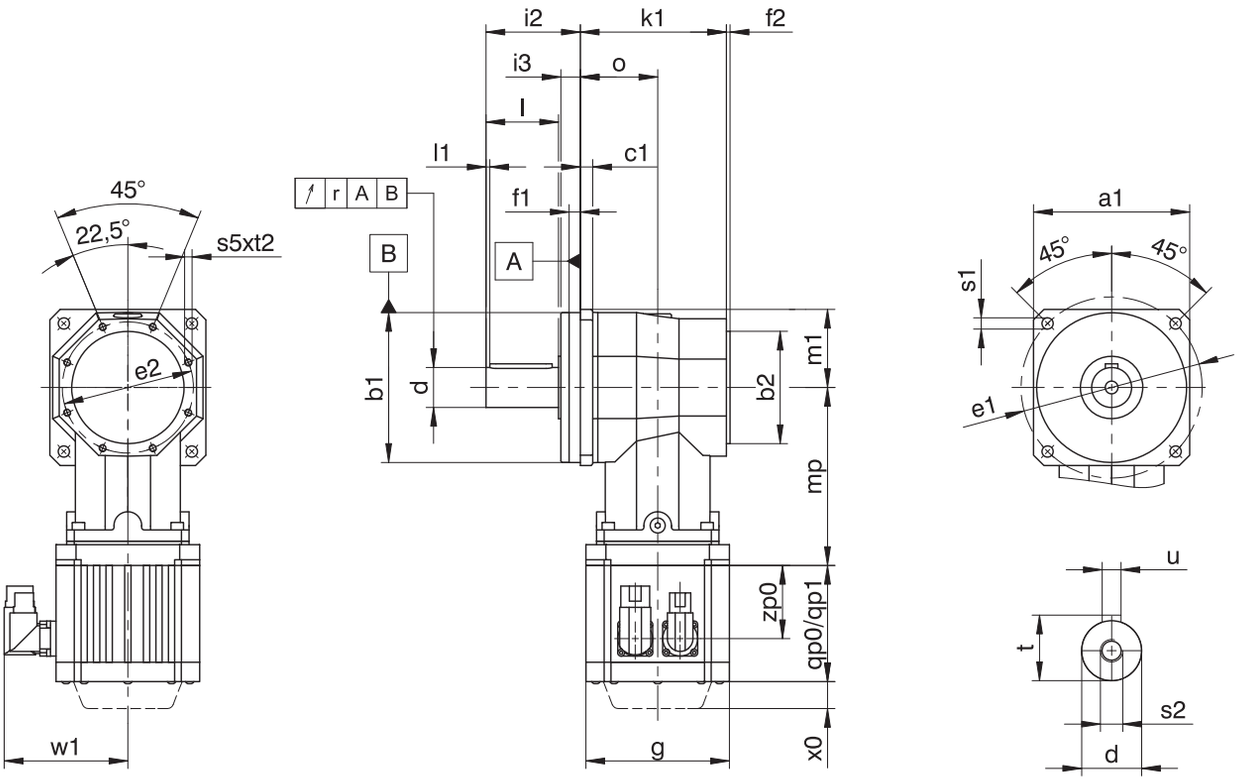

qp0	Applies to motors without brake.	qp1	Applies to motors with brake.
x0	Applies to encoders using an optical measuring method.	w1	Different for the One Cable Solution (OCS), see the chapter [▸ 17.4]

Dimensions of gear units

Type	□a1	Øb1	Øb2	c1	Ød	Øe1	Øe2	f1	f2	i2	i3	l	l1	k1	m1	o	r	Øs1	s2	s5	t	t2	u
KS402	101	95_{h6}	75_{h6}	10	22_{k6}	120	88	8	3	52.0	14.0	36	3	104	50.5	53	0.020	6.6	M8	M5	24.5	9	A6×6×28
KS403	101	95_{h6}	75_{h6}	10	22_{k6}	120	88	8	3	52.0	14.0	36	3	104	50.5	53	0.020	6.6	M8	M5	24.5	9	A6×6×28
KS502	125	120_{h6}	90_{h6}	10	32_{k6}	145	105	9	3	75.5	15.5	58	3	120	62.5	62	0.020	9.0	M12	M6	35.0	11	A10×8×50
KS503	125	120_{h6}	90_{h6}	10	32_{k6}	145	105	9	3	75.5	15.5	58	3	120	62.5	62	0.020	9.0	M12	M6	35.0	11	A10×8×50
KS702	155	150_{h6}	110_{h6}	15	40_{k6}	180	130	10	3	105.0	20.0	82	4	148	77.5	78	0.025	11.0	M16	M8	43.0	14	A12×8×70
KS703	155	150_{h6}	110_{h6}	15	40_{k6}	180	130	10	3	105.0	20.0	82	4	148	77.5	78	0.025	11.0	M16	M8	43.0	14	A12×8×70

Dimensions of motors

Type	□g	qp0	qp1	w1	x0	zp0
EZ301U	72	90	130.0	55.5	21	54.5
EZ302U	72	112	152.0	55.5	21	76.5
EZ303U	72	134	174.0	55.5	21	98.5
EZ401U	98	98	146.5	91.0	22	56.0
EZ402U	98	123	171.5	91.0	22	81.0
EZ404U	98	173	221.5	91.0	22	131.0
EZ501U	115	93	147.5	100.0	22	58.5
EZ502U	115	118	172.5	100.0	22	83.5
EZ503U	115	143	197.5	100.0	22	108.5
EZ505U	115	193	247.5	100.0	22	158.5
EZ701U	145	102	161.0	115.0	22	64.0
EZ702U	145	127	186.0	115.0	22	89.0
EZ703U	145	152	211.0	115.0	22	114.0
EZ705U	145	207	266.0	134.0	22	165.0
EZ802U	190	197	274.0	156.5	22	143.0

Dimensions of geared motors

Type	EZ3	EZ4	EZ5	EZ7	EZ8
	mp	mp	mp	mp	mp
KS402	124.0	120.5	123.0	–	–
KS403	204.0	–	–	–	–
KS502	–	140.0	142.5	148.5	–
KS503	241.0	237.5	240.0	–	–
KS702	–	–	167.0	173.0	188.0
KS703	–	277.0	279.5	285.5	–

9.3.5 Oil expansion tank

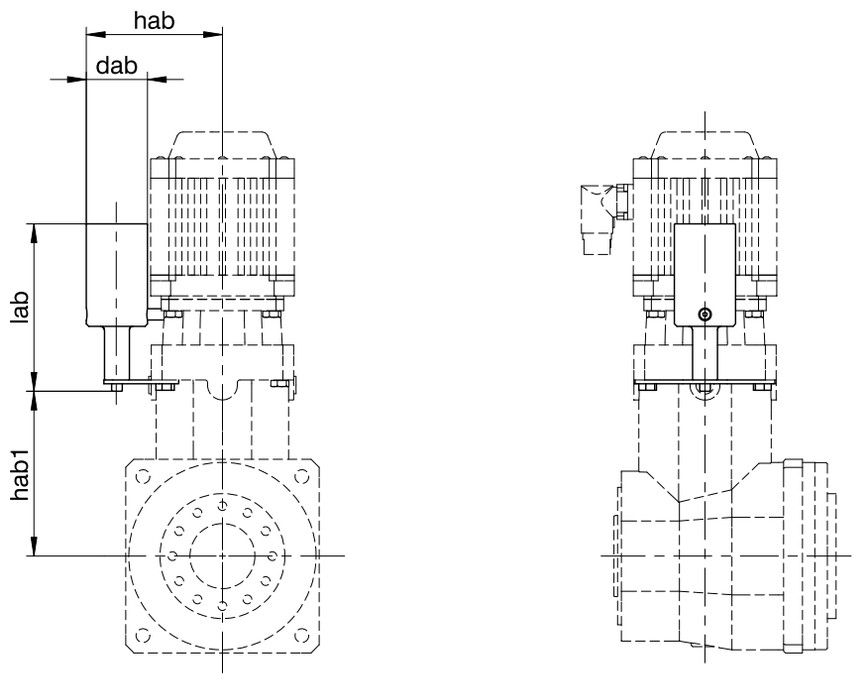

Dimensions

Type	EZ3				EZ4				EZ5			
	dab	lab	hab	hab1	dab	lab	hab	hab1	dab	lab	hab	hab1
KS403	34	100	74.5	85	–	–	–	–	–	–	–	–
KS503	39	122	92.0	105	39	122	92.0	105	–	–	–	–
KS703	–	–	–	–	49	134	109.5	132	49	134	109.5	132

More information can be found in Chapter [▸ 9.6.5]

9.4 Type designation

This chapter shows you an explanation of the type designation with the associated options.

Additional ordering information not included in the type designation can be found at the end of the chapter.

Example code

KS	5	0	2	G	F	0200	EZ401U

Explanation

Code	Designation	Design
KS	Type	Right-angle servo gear unit
5	Size	5 (example)
0	Generation	Generation 0
2	Stages	Two-stage
3		Three-stage
F	Shaft	Flange hollow shaft
S		Hollow shaft with shrink ring
G		Solid shaft without feather key
P		Solid shaft with feather key
F	Housing	Standard
0200	Transmission ratio (i x 10)	i = 20 (example)
EZ401U	Motor	EZ synchronous servo motor

To complete the type designation, also specify the following in your order:

- For a detailed type designation of the motor, see the chapter [▸ 17]
- Mounting position, see the chapter [▸ 9.5.3]
- Radial shaft seal rings at the output made of NBR or FKM (option), see the chapter [▸ 9.6.4]
- Position of the plug connectors, see the chapter [▸ 9.5.5]
- Attachment of oil expansion tank (option) on gear unit side 1 or 2 (required without exception for three-stage gear units in mounting position EL5), see the chapter [▸ 9.6.5]

9.4.1 Nameplate

An example geared motor nameplate is explained in the figure below.

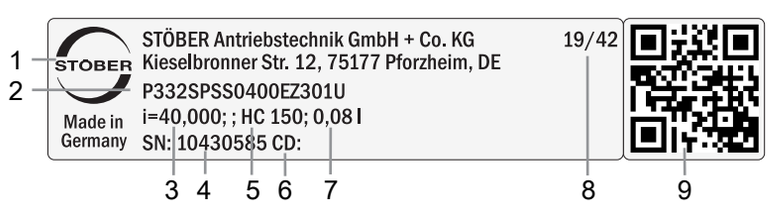

Code	Designation
1	Name of manufacturer
2	Type designation
3	Gear ratio of the gear unit
4	Serial number of the gear unit
5	Lubricant specification
6	Customer-specific data
7	Lubricant fill volume
8	Date of manufacture (year/calendar week)
9	QR code (link to product information)

9.4.1.1 Supporting documents

You can view or download supporting documents for the product by reading off the serial number on the nameplate of the product and entering it at the following address online:
https://id.stober.com

Alternatively, you can use a suitable mobile device to scan in the QR code on the nameplate of the product in order to be linked to the supporting documents.

9.5 Product description

9.5.1 Input options

EZ synchronous servo motor

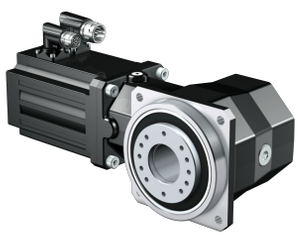

http://www.stoeber.de/en/KSEZ

9.5.2 Installation conditions

Take care to align the machine shaft with the gear unit hollow shaft when attaching the gear unit.

Maximum deviation ≤ 0.03 mm.

Hollow shaft with shrink ring

The tolerance of the hollow shaft hole is ISO H7.

The machine shaft must be ISO h6.

Select a material for the machine shaft with a permitted surface pressure of p ≥ 325 N/mm^2.

Possible materials:

- C45E +QT
- 42CrMo4

The torque and force values listed in this catalog are valid under the following conditions:

- When the flange hollow shaft and gear housing are fastened on the machine side using screws of strength class 12.9
- When the gear housings are adjusted at pilot øb1. The machine-side fit must be H7.
- When the flange hollow shaft is adjusted using the connecting element at pilot øbf or ødf

9.5.3 Mounting positions

The following table shows the standard mounting positions.

The numbers identify the gear unit sides. The mounting position is defined by the gear side facing downwards.

EL1	EL2	EL3
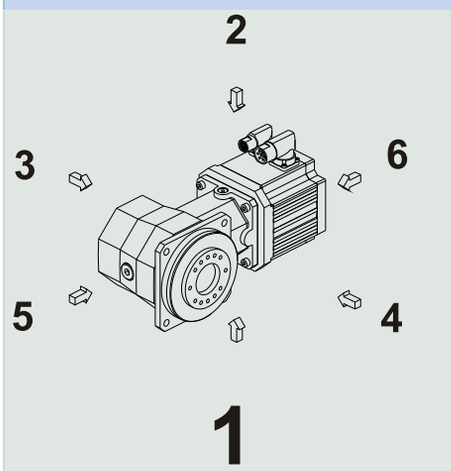	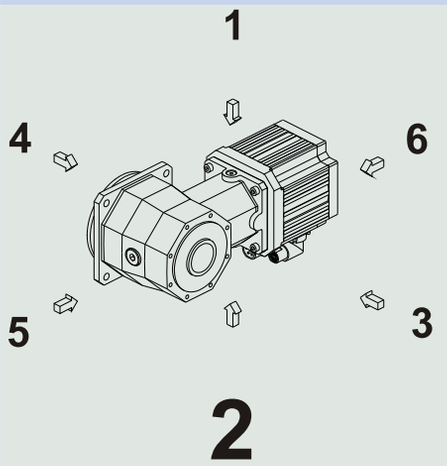	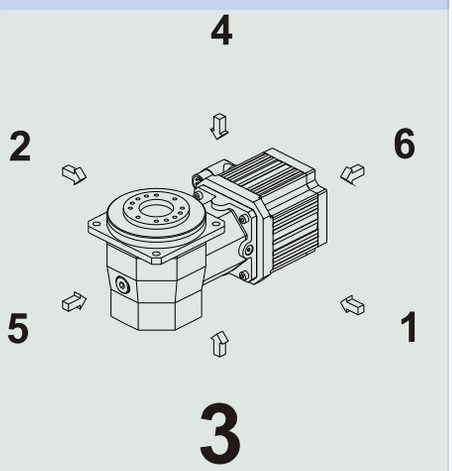
EL4	**EL5**	**EL6**
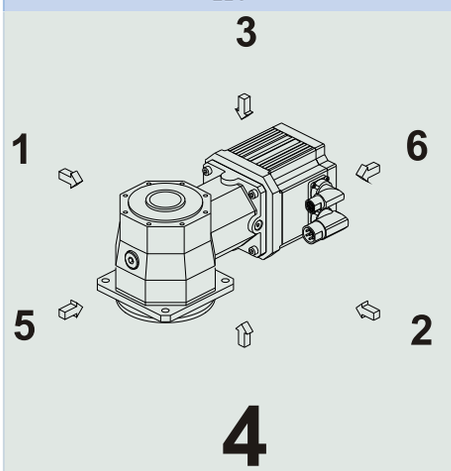	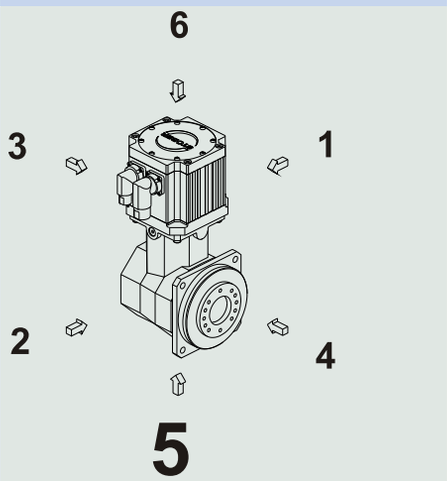	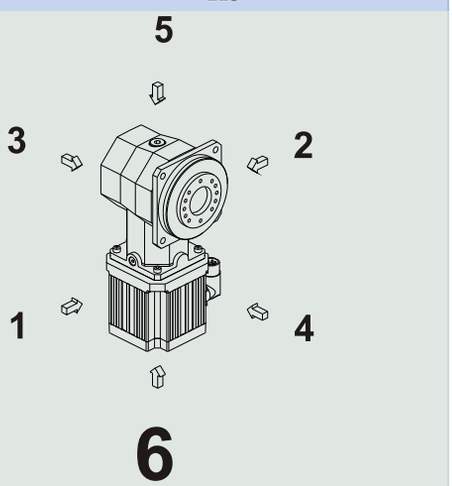

Since the lubricant filling volume of the gear unit depends on the mounting position, the mounting position must be specified when ordering.

9.5.4 Lubricants

STOBER fills the gear units with the amount and type of lubricant specified on the nameplate. The filling volume and the structure of the gear units depend on the mounting position.

Only install the gear units in the intended mounting position! Reposition the gear units only after consulting STOBER. Otherwise, STOBER assumes no liability for the gear units.

You will receive lubricants for use in the food industry upon request.

9.5.5 Position of the plug connectors

Mounting position EL1 Plug connector in 270° position (standard)	Mounting position EL4 Plug connector in 270° position (standard)
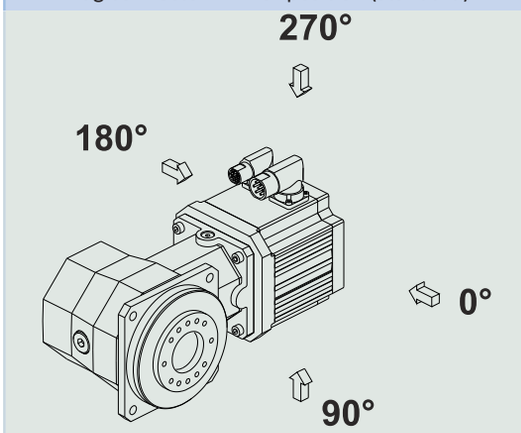	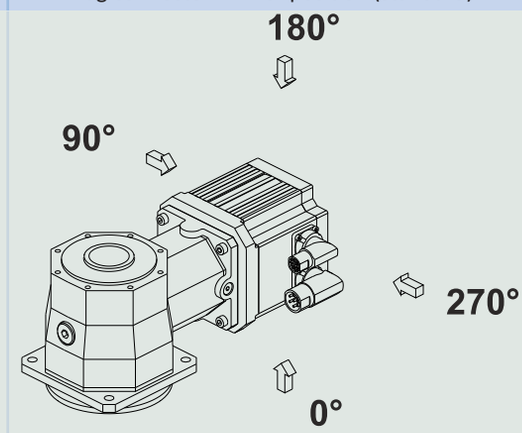

Indicate variations for your geared motor in the order.

Note that the plug connector position rotates along with the geared motor if the geared motor is in another mounting position.

9.5.6 Other product features

Feature	Value
Max. permitted gear unit temperature (on the surface of the gear unit)	≤ 90 °C
Paint	Black RAL 9005
Explosion-proof design in accordance with (ATEX) Directive 2014/34/EU (optional)	Not available
Efficiency:	
η_{get} two-stage	95%
η_{get} three-stage	93%
Protection class:[1]	
Gear unit	IP65
Motor	IP56, optionally IP66

9.5.7 Direction of rotation

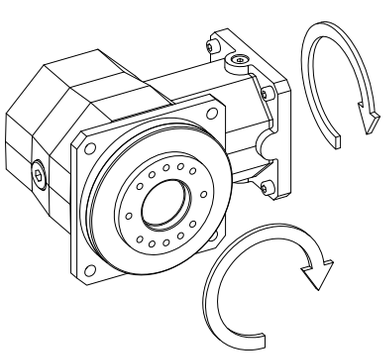

The pictures show mounting position EL1.

9.6 Project configuration

Project your drives using our SERVOsoft designing software. Download SERVOsoft for free at https://www.stoeber.de/en/ServoSoft.

Observe the limit conditions in this chapter to ensure a safe design for your drives.

An explanation of the formula symbols can be found in Chapter [▶ 23.1].

The formula symbols for values actually present in the application are marked with *.

[1] Observe the protection class of all the components.

9.6.1 Calculation of the operating point

Check the following conditions for operating points other than the nominal point M_{2N} specified in the selection tables.

$$n_{1m*} \leq \frac{n_{1maxDB}}{fB_T}$$

$$n_{1max*} \leq \frac{n_{1max\,ZB}}{fB_T}$$

$$M_{2eff*} \leq M_{2th}$$

$$M_{2acc*} \leq \frac{M_{2acc}}{fB_{ZB}}$$

$$M_{2NOT*} \leq M_{2NOT}$$

$$M_{2eq*} \leq M_{2N} \cdot \frac{S}{fB_{op} \cdot fB_t}$$

The values for n_{1maxDB}, n_{1maxZB}, M_{2acc}, M_{2NOT}, M_{2N} and S can be found in the selection tables.

The values for fB_T, fB_{op}, fB_t and fB_{ZB} can be found in the corresponding tables in this chapter.

Calculate the thermal limit torque M_{2th} for a duty cycle > 50%.

Example of cyclic operation

The following calculations are based on a representation of the power taken from the output based in accordance with the following example:

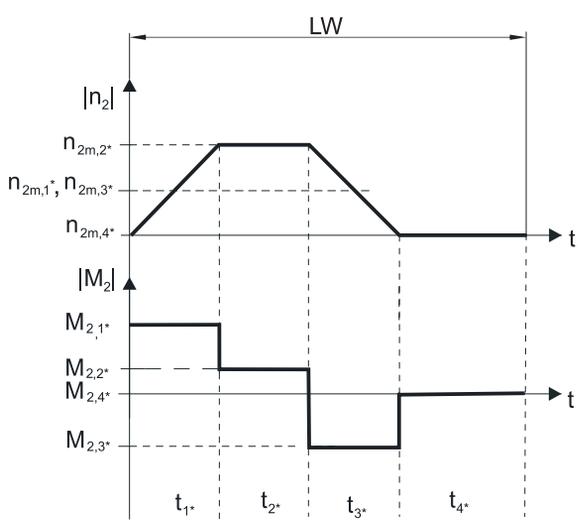

Calculation of the actual average input speed

$$n_{1m*} = n_{2m*} \cdot i$$

$$n_{2m*} = \frac{|n_{2m,1*}| \cdot t_{1*} + \ldots + |n_{2m,n*}| \cdot t_{n*}}{t_{1*} + \ldots + t_{n*}}$$

If $t_{1*} + \ldots + t_{3*} \geq 6$ min, calculate n_{2m*} without the rest phase t_{4*}.

The values for the ratio i can be found in the selection tables.

Calculation of the actual effective torque

$$M_{2eff*} = \sqrt{\frac{t_{1*} \cdot M_{2,1*}^2 + \ldots + t_{n*} \cdot M_{2,n*}^2}{t_{1*} + \ldots + t_{n*}}}$$

Calculation of the actual equivalent torque

$$M_{2eq^*} = \sqrt[3]{\frac{\left|n_{2m,1^*}\right| \cdot t_{1^*} \cdot \left|M_{2,1^*}{}^3\right| + \ldots + \left|n_{2m,n^*}\right| \cdot t_{n^*} \cdot \left|M_{2,n^*}{}^3\right|}{\left|n_{2m,1^*}\right| \cdot t_{1^*} + \ldots + \left|n_{2m,n^*}\right| \cdot t_{n^*}}}$$

Calculation of the thermal limit torque

Calculate the thermal limit torque M_{2th} for a duty cycle ED_{10} > 50% and the actual average input speed n_{1m^*}. (At $K_{mot,th} \leq 0$ you must reduce the average input speed n_{1m^*} accordingly or select another geared motor size.)

$$M_{2th} = M_{op} \cdot i \cdot K_{mot,th}$$

$$K_{mot,th} = 0{,}93 - \frac{a_{th}}{1000} \cdot fB_T \cdot \left(\frac{n_{1m^*}}{1000}\right)^3$$

The values for i and a_{th} can be found in the selection tables.

The values for fB_T can be found in the corresponding table in this chapter.

The value for the torque of the motor at operating point M_{op} with the determined average input speed n_{1m^*} can be found in the motor curve of Chapter [▶ 17.3]. Note the size, nominal speed n_N and cooling type of the motor. The figure below shows an example of reading the torque M_{op} of a motor with convection cooling at the operating point.

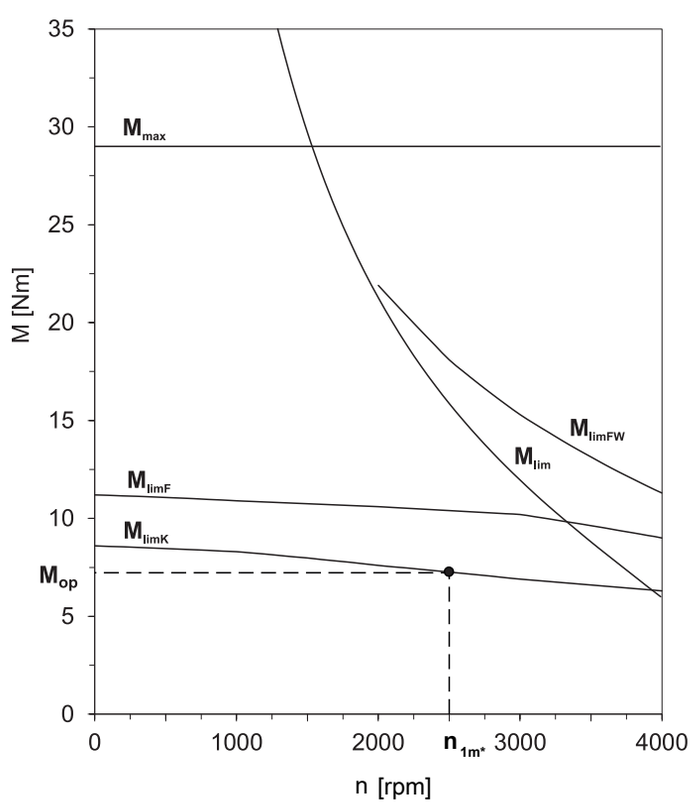

Operating factors

Operating mode	fB_{op}
Uniform continuous operation	1.00
Cyclic operation	1.00
Reversing load cyclic operation	1.00

Run time	fB_t
Daily runtime ≤ 8 h	1.00
Daily runtime ≤ 16 h	1.15
Daily runtime ≤ 24 h	1.20

Cyclic operation	fB_{ZB}
≤ 1000 load changes/hour (LW/h)	1.00
> 1000 load changes/hour (LW/h)	1.15

Temperature		fB_T
Motor cooling	**Surrounding temperature**	
Motor with forced ventilation	≤ 20 °C	0.9
	≤ 30 °C	1.0
	≤ 40 °C	1.15
Motor with convection cooling	≤ 20 °C	1.0
	≤ 30 °C	1.1
	≤ 40 °C	1.25

Notes

- The maximum permitted gear unit temperature (see the "Other product features" chapter) must not be exceeded. Doing so may result in damage to the geared motor.
- For braking from full speed (for example when the power fails or when setting up the machine), note the permitted gear unit torques (M_{2acc}, M_{2NOT}) in the selection tables.

9.6.2 Permitted shaft loads for the output shaft

The values specified in the tables apply to the permitted shaft loads:

- For shaft dimensions in accordance with the catalog
- For output speeds $n_{2m*} \leq 100$ rpm ($F^{2axN} = F_{2ax100}$; $F_{2radN} = F_{2rad100}$; $M_{2kN} = M_{2k100}$)
- Only if radial forces on the gear unit are stabilized by its pilots (housing, flange shaft)

9.6.2.1 F shaft design

Permitted shaft loads for F shaft design (flange hollow shaft)

Type	z_2 [mm]	F_{2ax100} [N]	$F_{2rad100}$ [N]	$F_{2rad,acc}$ [N]	M_{2k100} [Nm]	$M_{2k,acc}$ [Nm]
KS4	38.0	4000	6842	10263	260	390
KS5	45.0	6000	12222	18333	550	825
KS7	55.0	10000	16727	25091	920	1380

For other output speeds, download diagrams at http://configurator.stoeber.de.

The following applies to output speeds n_{2m*} > 100 rpm:

$$F_{2axN} = \frac{F_{2ax100}}{\sqrt[3]{\frac{n_{2m*}}{100\ \text{rpm}}}} \qquad F_{2radN} = \frac{F_{2rad100}}{\sqrt[3]{\frac{n_{2m*}}{100\ \text{rpm}}}} \qquad M_{2kN} = \frac{M_{2k100}}{\sqrt[3]{\frac{n_{2m*}}{100\ \text{rpm}}}}$$

The values for F_{2ax100}, $F_{2rad100}$ and M_{2k100} can be found in the table "Permitted shaft loads" in this chapter.

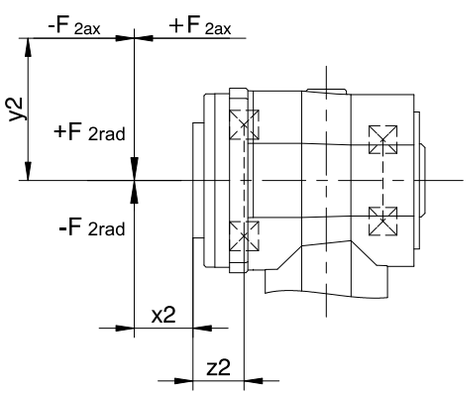

Fig. 1: Force application points for flange hollow shaft

You can determine the permitted radial forces from the permitted breakdown torque M_{2kN} and $M_{2k,acc}$. The actual radial forces may not exceed the permitted radial forces. The permitted radial forces pertain to the shaft end (x2 = 0).

$$M_{2k,acc*} = \frac{F_{2ax*} \cdot y_2 + F_{2rad,acc*} \cdot (x_2 + z_2)}{1000} \leq M_{2k,acc}$$

For applications with multiple axial and/or radial forces, you must add the forces as vectors.

In the event of EMERGENCY OFF operation (max. 1000 load changes), you can multiply the permitted forces and torques for F_{2ax20}, F_{2rad20} and M_{2k20} by a factor of two.

Also note the calculation for equivalent values:

$$M_{2k,eq*} = \sqrt[3]{\frac{|n_{2m,1*}| \cdot t_{1*} \cdot |M_{2k,acc,1*}{}^3| + \ldots + |n_{2m,n*}| \cdot t_{n*} \cdot |M_{2k,acc,n*}{}^3|}{|n_{2m,1*}| \cdot t_{1*} + \ldots + |n_{2m,n*}| \cdot t_{n*}}} \leq M_{2kN}$$

$$F_{2rad,eq*} = \sqrt[3]{\frac{|n_{2m,1*}| \cdot t_{1*} \cdot |F_{2rad,acc,1*}{}^3| + \ldots + |n_{2m,n*}| \cdot t_{n*} \cdot |F_{2rad,acc,n*}{}^3|}{|n_{2m,1*}| \cdot t_{1*} + \ldots + |n_{2m,n*}| \cdot t_{n*}}} \leq F_{2radN}$$

$$F_{2ax,eq*} \leq F_{2axN}$$

9.6.2.2 S shaft design

Permitted shaft loads for S shaft design (hollow shaft with shrink ring)

Type	z_2 [mm]	F_{2ax100} [N]	$F_{2rad100}$ [N]	$F_{2rad,acc}$ [N]	M_{2k100} [Nm]	$M_{2k,acc}$ [Nm]
KS4	36.0	4000	5000	5000	260	260
KS5	42.0	6000	8000	8000	550	550
KS7	52.0	10000	10000	10000	920	920

For other output speeds, download diagrams at http://configurator.stoeber.de.

The following applies to output speeds n_{2m*} > 100 rpm:

$$F_{2axN} = \frac{F_{2ax100}}{\sqrt[3]{\frac{n_{2m*}}{100\ \text{rpm}}}} \qquad F_{2radN} = \frac{F_{2rad100}}{\sqrt[3]{\frac{n_{2m*}}{100\ \text{rpm}}}} \qquad M_{2kN} = \frac{M_{2k100}}{\sqrt[3]{\frac{n_{2m*}}{100\ \text{rpm}}}}$$

The values for F_{2ax100}, $F_{2rad100}$ and M_{2k100} can be found in the table "Permitted shaft loads" in this chapter.

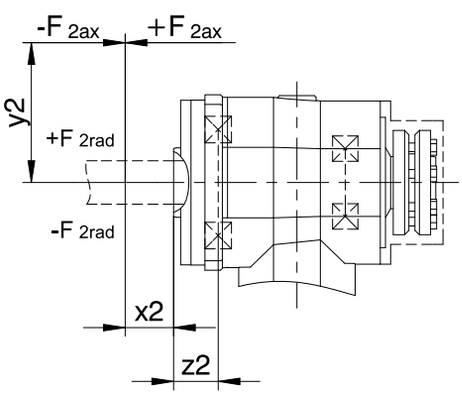

Fig. 2: Force application points for the hollow shaft with shrink ring

You can determine the permitted radial forces from the permitted breakdown torque M_{2kN} and $M_{2k,acc}$. The actual radial forces may not exceed the permitted radial forces. The permitted radial forces pertain to the shaft end (x2 = 0).

$$M_{2k,acc*} = \frac{2 \cdot F_{2ax*} \cdot y_2 + F_{2rad,acc*} \cdot (x_2 + z_2)}{1000} \leq M_{2k,acc}$$

For applications with multiple axial and/or radial forces, you must add the forces as vectors.

In the event of EMERGENCY OFF operation (max. 1000 load changes), you can multiply the permitted forces and torques for F_{2ax20}, F_{2rad20} and M_{2k20} by a factor of two.

Also note the calculation for equivalent values:

$$M_{2k,eq*} = \sqrt[3]{\frac{|n_{2m,1*}| \cdot t_{1*} \cdot |M_{2k,acc,1*}{}^3| + \ldots + |n_{2m,n*}| \cdot t_{n*} \cdot |M_{2k,acc,n*}{}^3|}{|n_{2m,1*}| \cdot t_{1*} + \ldots + |n_{2m,n*}| \cdot t_{n*}}} \leq M_{2kN}$$

$$F_{2rad,eq*} = \sqrt[3]{\frac{|n_{2m,1*}| \cdot t_{1*} \cdot |F_{2rad,acc,1*}{}^3| + \ldots + |n_{2m,n*}| \cdot t_{n*} \cdot |F_{2rad,acc,n*}{}^3|}{|n_{2m,1*}| \cdot t_{1*} + \ldots + |n_{2m,n*}| \cdot t_{n*}}} \leq F_{2radN}$$

$$F_{2ax,eq*} \leq F_{2axN}$$

9.6.2.3 G and P shaft designs

Permitted shaft loads for G and P shaft designs (solid shaft)

Type	z_2 [mm]	F_{2ax100} [N]	$F_{2rad100}$ [N]	$F_{2rad,acc}$ [N]	M_{2k100} [Nm]	$M_{2k,acc}$ [Nm]
KS4	34.0	4000	5000	5000	260	260
KS5	40.0	6000	8000	8000	550	550
KS7	51.0	10000	10000	10000	920	920

For other output speeds, download diagrams at http://configurator.stoeber.de.

The following applies to output speeds n_{2m*} > 100 rpm:

$$F_{2axN} = \frac{F_{2ax100}}{\sqrt[3]{\frac{n_{2m*}}{100\ \text{rpm}}}} \qquad F_{2radN} = \frac{F_{2rad100}}{\sqrt[3]{\frac{n_{2m*}}{100\ \text{rpm}}}} \qquad M_{2kN} = \frac{M_{2k100}}{\sqrt[3]{\frac{n_{2m*}}{100\ \text{rpm}}}}$$

The values for F_{2ax100}, $F_{2rad100}$ and M_{2k100} can be found in the table "Permitted shaft loads" in this chapter.

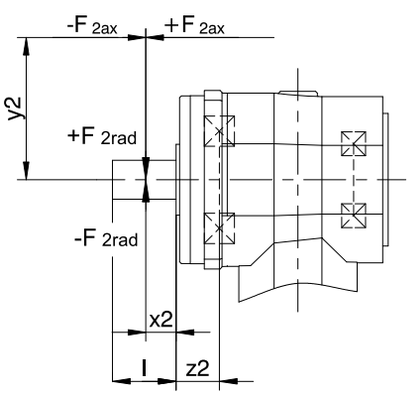

Fig. 3: Force application points for solid shaft

The specified values for $F_{2rad100}$ and $F_{2rad,acc}$ refer to an application of force at the center of the output shaft: x_2 = l/2.

Shaft dimensions can be found in the "Dimensional drawings" chapter.

The following applies to other force application points:

$$M_{2k,acc*} = \frac{2 \cdot F_{2ax*} \cdot y_2 + F_{2rad,acc*} \cdot (x_2 + z_2)}{1000} \leq M_{2k,acc}$$

$$F_{2rad,acc*} \leq F_{2rad,acc}$$

$$F_{2ax*} \leq F_{2axN}$$

The values for $F_{2rad,acc}$ and $M_{2k,acc}$ can be found in the table "Permitted shaft loads" in this chapter.

For applications with multiple axial and/or radial forces, you must add the forces as vectors.

In the event of EMERGENCY OFF operation (max. 1000 load changes), you can multiply the permitted forces and torques for F_{2ax20}, F_{2rad20} and M_{2k20} by a factor of two.

Also note the calculation for equivalent values:

$$M_{2k,eq*} = \sqrt[3]{\frac{|n_{2m,1*}| \cdot t_{1*} \cdot |M_{2k,acc,1*}{}^3| + \ldots + |n_{2m,n*}| \cdot t_{n*} \cdot |M_{2k,acc,n*}{}^3|}{|n_{2m,1*}| \cdot t_{1*} + \ldots + |n_{2m,n*}| \cdot t_{n*}}} \leq M_{2kN}$$

$$F_{2rad,eq*} = \sqrt[3]{\frac{|n_{2m,1*}| \cdot t_{1*} \cdot |F_{2rad,acc,1*}{}^3| + \ldots + |n_{2m,n*}| \cdot t_{n*} \cdot |F_{2rad,acc,n*}{}^3|}{|n_{2m,1*}| \cdot t_{1*} + \ldots + |n_{2m,n*}| \cdot t_{n*}}} \leq F_{2radN}$$

9.6.3 Torsional stiffness

The torsional stiffness C_2 depends on the shaft design. Details for the F shaft design can be found in the selection tables.

Details regarding the G, P and S shaft designs can be found in the following table:

	Torsional stiffness C_2 G and P shaft designs	Torsional stiffness C_2 S shaft design
KS4	6.5	7.1
KS5	15	16
KS7	32	36

9.6.4 Recommendation for radial shaft seal rings

For a duty cycle > 60% and higher surrounding temperatures, we recommend radial shaft seal rings made of FKM at the output.

Properties:

- Excellent temperature resistance
- High chemical stability
- Very good resistance to aging
- Excellent resistance in oils and greases
- For use in the food, beverage and pharmaceutical industries

Leak-proofness

Our gear units are equipped with high-quality radial shaft seal rings and checked for leaks. However, a leak cannot be fully ruled out over the length of use of a gear unit. If you use a gear unit with goods incompatible with the lubricant, you must take measures to prevent direct contact with the gear unit lubricant in case of a leak.

9.6.5 Oil expansion tank

The gear units have a higher fill level in mounting position EL5. The oil expansion tank prevents oil from escaping out of the gear unit.

Notes

- Three-stage KS gear units in mounting position EL5 can be used only in combination with an oil expansion tank!
- It is not possible to use an oil expansion tank if the plug connector and oil expansion tank are on the same side!
- Please specify the attachment side (gear unit side 1 or 2) in the order.
- Note that mounting an oil expansion tank is not possible with every motor adapter (collision between motor adapter and oil expansion tank).

9.7 Additional documentation

Additional documentation related to the product can be found at
http://www.stoeber.de/en/downloads/

Enter the ID of the documentation in the Search... field.

Documentation	ID
Operating manual for KL/KS/PHK/PHKX/PHQK/PK/PKX right-angle servo gear units and right-angle servo geared motors	443150_en

10 PKX right-angle planetary geared motors

Table of contents

10.1 Overview 242

10.2 Selection tables 243

10.3 Dimensional drawings 257

10.3.1 G shaft design (solid shaft without feather key) 258

10.3.2 P shaft design (solid shaft with feather key) 260

10.4 Type designation 262

10.4.1 Nameplate 263

10.5 Product description 263

10.5.1 Input options 263

10.5.2 Installation conditions 263

10.5.3 Mounting positions 264

10.5.4 Lubricants 264

10.5.5 Position of the plug connectors 265

10.5.6 Other product features 265

10.5.7 Direction of rotation 265

10.6 Project configuration 265

10.6.1 Calculation of the operating point 266

10.6.2 Permitted shaft loads for the output shaft 268

10.6.3 Recommendation for radial shaft seal rings 270

10.6.4 Reverse operation 271

10.7 Additional documentation 271

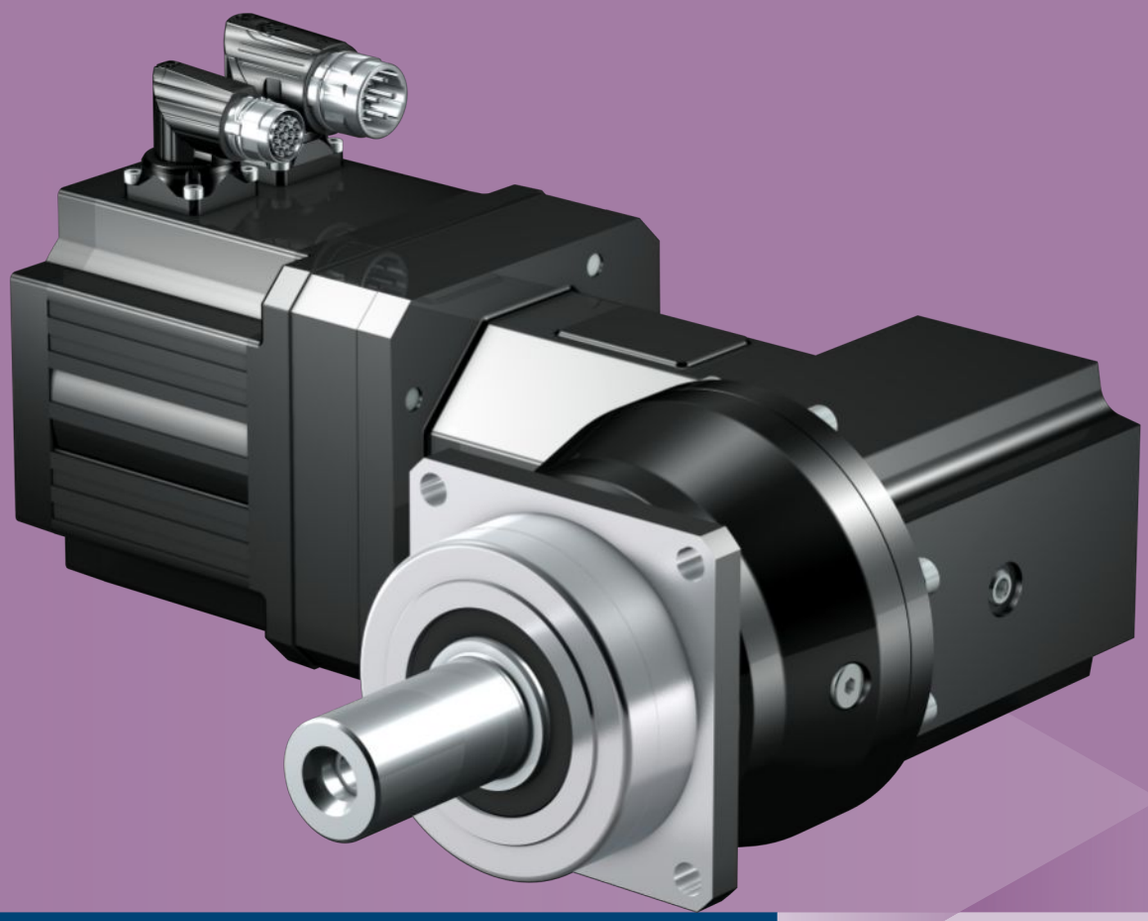

10 Right-angle planetary geared motors

PKX

10.1 Overview

Helical-geared precision right-angle planetary geared motors

Features

Power density	★★★★☆
Backlash	★★★★★
Price category	€€€
Shaft load	★★★★☆
Smooth operation	★★☆☆☆
Torsional stiffness	★★★☆☆
Mass moment of inertia	★★★☆☆
Helical gearing	✓
Maintenance-free	✓
Small installation space	✓
Continuous operation without cooling	✓
Reinforced output bearing	✓ (optional)
Compact and highly dynamic due to direct motor attachment	✓

Key ★☆☆☆☆ good | ★★★★★ excellent
€ Economy | €€€€€ Premium

Technical data

i	3 – 300
M_{2acc}	11 – 3300 Nm
$\Delta\phi_2$	2 – 8.5 arcmin
η_{get}	94 – 96 %

10.2 Selection tables

The technical data specified in the selection tables applies to:

- Installation altitudes up to 1000 m above sea level
- Surrounding temperatures from 0 °C to 40 °C
- Drives with convection-cooled motors (e.g. EZ401**U**)
- M_{2acc}, M_{2accHT}: Solid shaft design without feather key (we generally recommend this shaft design for cyclic operation)

For the technical data on drives with forced ventilated motors (e.g. EZ401**B**), refer to http://configurator.stoeber.de.

An explanation of the formula symbols can be found in Chapter [▶ 23.1].

n_{2N} [rpm]	M_{2N} [Nm]	$M_{2,0}$ [Nm]	a_{th}	S	Type	M_{2acc} [Nm]	M_{2accHT} [Nm]	M_{2NOT} [Nm]	i	i_{exakt}	n_{1maxDB} EL1,2,5,6 [rpm]	n_{1maxDB} EL3,4 [rpm]	n_{1maxZB} [rpm]	J_1 [kgcm²]	$\Delta\varphi_2$ [arcmin]	$\Delta\varphi_{2red}$ [arcmin]	C_2 [Nm/arcmin]	m [kg]
P231KX (n_{1N} = 3000 rpm, $M_{2acc,max}$ = 25 Nm)																		
200	13	14	35	1.2	P231_0050KX301_0030 MF EZ301U	25	–	51	15.00	15/1	3500	3500	6000	0.94	8.0	–	1.6	4.5
250	11	11	28	1.5	P231_0040KX301_0030 MF EZ301U	25	–	51	12.00	12/1	3500	3500	6000	0.94	8.5	–	1.5	4.5
300	8.9	9.1	32	1.8	P231_0050KX301_0020 MF EZ301U	25	–	51	10.00	10/1	3500	3000	5500	1.0	8.0	–	1.6	4.5
300	15	16	54	1.1	P231_0050KX301_0020 MF EZ302U	25	–	51	10.00	10/1	3500	3000	5500	1.1	8.0	–	1.6	5.1
375	7.1	7.3	25	2.3	P231_0040KX301_0020 MF EZ301U	21	–	51	8.000	8/1	3500	3000	5500	1.0	8.5	–	1.5	4.5
375	12	13	43	1.3	P231_0040KX301_0020 MF EZ302U	25	–	51	8.000	8/1	3500	3000	5500	1.1	8.5	–	1.5	5.1
375	16	17	56	1.0	P231_0040KX301_0020 MF EZ303U	25	–	51	8.000	8/1	3500	3000	5500	1.2	8.5	–	1.5	5.6
429	6.2	6.4	44	2.2	P231_0070KX301_0010 MF EZ301U	19	–	46	7.000	7/1	3000	2500	4500	1.2	7.5	–	1.7	4.5
429	11	11	76	1.3	P231_0070KX301_0010 MF EZ302U	23	–	46	7.000	7/1	3000	2500	4500	1.3	7.5	–	1.7	5.1
600	4.4	4.5	32	3.0	P231_0050KX301_0010 MF EZ301U	13	–	51	5.000	5/1	3000	2500	4500	1.2	8.0	–	1.6	4.5
600	7.6	8.0	54	1.8	P231_0050KX301_0010 MF EZ302U	24	–	51	5.000	5/1	3000	2500	4500	1.3	8.0	–	1.6	5.1
600	9.9	10	70	1.4	P231_0050KX301_0010 MF EZ303U	25	–	51	5.000	5/1	3000	2500	4500	1.4	8.0	–	1.6	5.6
600	13	14	95	1.0	P231_0050KX301_0010 MF EZ401U	25	–	51	5.000	5/1	3000	2500	4500	2.0	8.0	–	1.6	7.0
750	3.6	3.6	25	3.8	P231_0040KX301_0010 MF EZ301U	11	–	51	4.000	4/1	3000	2500	4500	1.2	8.5	–	1.5	4.5
750	6.1	6.4	43	2.2	P231_0040KX301_0010 MF EZ302U	19	–	51	4.000	4/1	3000	2500	4500	1.3	8.5	–	1.5	5.1
750	7.9	8.4	56	1.7	P231_0040KX301_0010 MF EZ303U	25	–	51	4.000	4/1	3000	2500	4500	1.5	8.5	–	1.5	5.6
750	11	11	76	1.3	P231_0040KX301_0010 MF EZ401U	25	–	51	4.000	4/1	3000	2500	4500	2.0	8.5	–	1.5	7.0
P231KX (n_{1N} = 6000 rpm, $M_{2acc,max}$ = 25 Nm)																		
400	13	14	35	1.2	P231_0050KX301_0030 MF EZ301U	25	–	51	15.00	15/1	3500	3500	6000	0.94	8.0	–	1.6	4.5
500	10	11	28	1.5	P231_0040KX301_0030 MF EZ301U	25	–	51	12.00	12/1	3500	3500	6000	0.94	8.5	–	1.5	4.5
P331KX (n_{1N} = 3000 rpm, $M_{2acc,max}$ = 69 Nm)																		
100	27	27	31	1.4	P331_0100KX301_0030 MF EZ301U	60	60	120	30.00	30/1	3500	3500	6000	0.94	5.0	3.0	4.0	5.3
125	21	22	22	1.9	P331_0080KX301_0030 MF EZ301U	63	64	130	24.00	24/1	3500	3500	6000	0.94	5.5	3.5	4.1	5.3
125	36	39	38	1.1	P331_0080KX301_0030 MF EZ302U	63	65	130	24.00	24/1	3500	3500	6000	1.0	5.5	3.5	4.1	5.9
143	19	19	17	2.4	P331_0070KX301_0030 MF EZ301U	56	56	140	21.00	21/1	3500	3500	6000	0.94	5.5	3.5	4.2	5.3
143	32	34	30	1.4	P331_0070KX301_0030 MF EZ302U	69	75	140	21.00	21/1	3500	3500	6000	1.0	5.5	3.5	4.2	5.9
143	42	44	39	1.1	P331_0070KX301_0030 MF EZ303U	69	75	140	21.00	21/1	3500	3500	6000	1.1	5.5	3.5	4.2	6.4
150	18	18	28	2.0	P331_0100KX301_0020 MF EZ301U	54	54	120	20.00	20/1	3500	3000	5500	1.0	5.0	3.0	4.0	5.3
150	30	32	48	1.2	P331_0100KX301_0020 MF EZ302U	60	60	120	20.00	20/1	3500	3000	5500	1.1	5.0	3.0	4.0	5.9
188	14	15	20	2.8	P331_0080KX301_0020 MF EZ301U	43	43	130	16.00	16/1	3500	3000	5500	1.0	5.5	3.5	4.1	5.3
188	24	26	35	1.6	P331_0080KX301_0020 MF EZ302U	63	65	130	16.00	16/1	3500	3000	5500	1.1	5.5	3.5	4.1	5.9
188	32	33	45	1.3	P331_0080KX301_0020 MF EZ303U	63	65	130	16.00	16/1	3500	3000	5500	1.2	5.5	3.5	4.1	6.4
200	13	14	13	3.2	P331_0050KX301_0030 MF EZ301U	40	40	130	15.00	15/1	3500	3500	6000	0.94	6.0	4.0	3.8	5.3
200	23	24	23	1.9	P331_0050KX301_0030 MF EZ302U	63	63	130	15.00	15/1	3500	3500	6000	1.0	6.0	4.0	3.8	5.9
200	30	31	29	1.4	P331_0050KX301_0030 MF EZ303U	63	63	130	15.00	15/1	3500	3500	6000	1.2	6.0	4.0	3.8	6.4
200	40	43	40	1.1	P331_0050KX301_0030 MF EZ401U	63	63	130	15.00	15/1	3500	3500	6000	1.7	6.0	4.0	3.8	7.8
214	12	13	16	3.6	P331_0070KX301_0020 MF EZ301U	37	37	140	14.00	14/1	3500	3000	5500	1.0	5.5	3.5	4.2	5.3
214	21	22	27	2.1	P331_0070KX301_0020 MF EZ302U	67	67	140	14.00	14/1	3500	3000	5500	1.1	5.5	3.5	4.2	5.9
214	28	29	35	1.6	P331_0070KX301_0020 MF EZ303U	69	75	140	14.00	14/1	3500	3000	5500	1.2	5.5	3.5	4.2	6.4
214	37	40	48	1.2	P331_0070KX301_0020 MF EZ401U	69	75	140	14.00	14/1	3500	3000	5500	1.7	5.5	3.5	4.2	7.8
250	11	11	13	3.2	P331_0040KX301_0030 MF EZ301U	32	32	100	12.00	12/1	3500	3500	6000	0.95	6.5	4.5	3.3	5.3
250	18	19	23	1.9	P331_0040KX301_0030 MF EZ302U	50	50	100	12.00	12/1	3500	3500	6000	1.0	6.5	4.5	3.3	5.9
250	24	25	29	1.4	P331_0040KX301_0030 MF EZ303U	50	50	100	12.00	12/1	3500	3500	6000	1.2	6.5	4.5	3.3	6.4
250	32	34	40	1.1	P331_0040KX301_0030 MF EZ401U	50	50	100	12.00	12/1	3500	3500	6000	1.7	6.5	4.5	3.3	7.8
300	8.9	9.1	12	4.8	P331_0050KX301_0020 MF EZ301U	27	27	130	10.00	10/1	3500	3000	5500	1.0	6.0	4.0	3.8	5.3
300	15	16	20	2.8	P331_0050KX301_0020 MF EZ302U	48	48	130	10.00	10/1	3500	3000	5500	1.1	6.0	4.0	3.8	5.9
300	20	21	27	2.1	P331_0050KX301_0020 MF EZ303U	63	63	130	10.00	10/1	3500	3000	5500	1.2	6.0	4.0	3.8	6.4
300	27	29	36	1.6	P331_0050KX301_0020 MF EZ401U	63	63	130	10.00	10/1	3500	3000	5500	1.8	6.0	4.0	3.8	7.8
375	7.1	7.3	12	4.8	P331_0040KX301_0020 MF EZ301U	21	21	100	8.000	8/1	3500	3000	5500	1.0	6.5	4.5	3.3	5.3

n_{2N} [rpm]	M_{2N} [Nm]	$M_{2,0}$ [Nm]	a_{th}	S	Type	M_{2acc} [Nm]	M_{2accHT} [Nm]	M_{2NOT} [Nm]	i	i_{exakt}	n_{1maxDB} EL1,2,5,6 [rpm]	n_{1maxDB} EL3,4 [rpm]	n_{1maxZB} [rpm]	J_1 [kgcm²]	$\Delta\varphi_2$ [arcmin]	$\Delta\varphi_{2red}$ [arcmin]	C_2 [Nm/ arcmin]	m [kg]
P331KX (n_{1N} = 3000 rpm, $M_{2acc,max}$ = 69 Nm)																		
375	12	13	20	2.8	P331_0040KX301_0020 MF EZ302U	38	38	100	8.000	8/1	3500	3000	5500	1.1	6.5	4.5	3.3	5.9
375	16	17	27	2.1	P331_0040KX301_0020 MF EZ303U	50	50	100	8.000	8/1	3500	3000	5500	1.2	6.5	4.5	3.3	6.4
375	21	23	36	1.6	P331_0040KX301_0020 MF EZ401U	50	50	100	8.000	8/1	3500	3000	5500	1.8	6.5	4.5	3.3	7.8
429	11	11	26	3.7	P331_0070KX301_0010 MF EZ302U	33	33	140	7.000	7/1	3000	2500	4500	1.3	5.5	3.5	4.2	5.9
429	14	15	34	2.8	P331_0070KX301_0010 MF EZ303U	47	47	140	7.000	7/1	3000	2500	4500	1.4	5.5	3.5	4.2	6.4
429	19	20	46	2.1	P331_0070KX301_0010 MF EZ401U	57	57	140	7.000	7/1	3000	2500	4500	2.0	5.5	3.5	4.2	7.8
429	31	35	77	1.3	P331_0070KX301_0010 MF EZ402U	69	75	140	7.000	7/1	3000	2500	4500	2.7	5.5	3.5	4.2	8.9
500	5.3	5.4	12	4.8	P331_0030KX301_0020 MF EZ301U	16	16	77	6.000	6/1	3500	3000	5500	1.1	7.5	5.5	2.4	5.3
500	9.1	9.6	20	2.8	P331_0030KX301_0020 MF EZ302U	29	29	77	6.000	6/1	3500	3000	5500	1.2	7.5	5.5	2.4	5.9
500	12	13	27	2.1	P331_0030KX301_0020 MF EZ303U	38	38	77	6.000	6/1	3500	3000	5500	1.3	7.5	5.5	2.4	6.4
500	16	17	36	1.6	P331_0030KX301_0020 MF EZ401U	38	38	77	6.000	6/1	3500	3000	5500	1.8	7.5	5.5	2.4	7.8
600	9.9	10	24	4.0	P331_0050KX301_0010 MF EZ303U	33	33	110	5.000	5/1	3000	2500	4500	1.5	6.0	4.0	3.8	6.4
600	13	14	33	2.9	P331_0050KX301_0010 MF EZ401U	41	41	110	5.000	5/1	3000	2500	4500	2.0	6.0	4.0	3.8	7.8
600	22	25	55	1.8	P331_0050KX301_0010 MF EZ402U	63	63	110	5.000	5/1	3000	2500	4500	2.7	6.0	4.0	3.8	8.9
600	33	41	80	1.2	P331_0050KX301_0010 MF EZ404U	63	63	110	5.000	5/1	3000	2500	4500	4.1	6.0	4.0	3.8	11
750	7.9	8.4	22	4.3	P331_0040KX301_0010 MF EZ303U	27	27	91	4.000	4/1	3000	2500	4500	1.5	6.5	4.5	3.3	6.4
750	11	11	30	3.2	P331_0040KX301_0010 MF EZ401U	32	32	91	4.000	4/1	3000	2500	4500	2.1	6.5	4.5	3.3	7.8
750	18	20	51	1.9	P331_0040KX301_0010 MF EZ402U	50	50	91	4.000	4/1	3000	2500	4500	2.8	6.5	4.5	3.3	8.9
750	26	33	75	1.3	P331_0040KX301_0010 MF EZ404U	50	50	91	4.000	4/1	3000	2500	4500	4.1	6.5	4.5	3.3	11
1000	5.9	6.3	22	4.3	P331_0030KX301_0010 MF EZ303U	20	20	68	3.000	3/1	3000	2500	4500	1.7	7.5	5.5	2.4	6.4
1000	8.0	8.6	30	3.2	P331_0030KX301_0010 MF EZ401U	24	24	68	3.000	3/1	3000	2500	4500	2.2	7.5	5.5	2.4	7.8
1000	13	15	51	1.9	P331_0030KX301_0010 MF EZ402U	38	38	68	3.000	3/1	3000	2500	4500	2.9	7.5	5.5	2.4	8.9
1000	20	25	75	1.3	P331_0030KX301_0010 MF EZ404U	38	38	68	3.000	3/1	3000	2500	4500	4.3	7.5	5.5	2.4	11
P331KX (n_{1N} = 6000 rpm, $M_{2acc,max}$ = 69 Nm)																		
200	26	27	33	1.3	P331_0100KX301_0030 MF EZ301U	60	60	120	30.00	30/1	3500	3500	6000	0.94	5.0	3.0	4.0	5.3
250	20	22	21	2.0	P331_0080KX301_0030 MF EZ301U	63	64	130	24.00	24/1	3500	3500	6000	0.94	5.5	3.5	4.1	5.3
250	34	39	36	1.2	P331_0080KX301_0030 MF EZ302U	63	65	130	24.00	24/1	3500	3500	6000	1.0	5.5	3.5	4.1	5.9
286	18	19	17	2.5	P331_0070KX301_0030 MF EZ301U	56	56	140	21.00	21/1	3500	3500	6000	0.94	5.5	3.5	4.2	5.3
286	30	34	28	1.5	P331_0070KX301_0030 MF EZ302U	69	75	140	21.00	21/1	3500	3500	6000	1.0	5.5	3.5	4.2	5.9
286	39	45	37	1.1	P331_0070KX301_0030 MF EZ303U	69	75	140	21.00	21/1	3500	3500	6000	1.1	5.5	3.5	4.2	6.4
400	13	14	16	2.6	P331_0050KX301_0030 MF EZ301U	40	40	130	15.00	15/1	3500	3500	6000	0.94	6.0	4.0	3.8	5.3
400	21	24	27	1.6	P331_0050KX301_0030 MF EZ302U	63	63	130	15.00	15/1	3500	3500	6000	1.0	6.0	4.0	3.8	5.9
400	28	32	35	1.2	P331_0050KX301_0030 MF EZ303U	63	63	130	15.00	15/1	3500	3500	6000	1.2	6.0	4.0	3.8	6.4
400	33	40	41	1.0	P331_0050KX301_0030 MF EZ401U	63	63	130	15.00	15/1	3500	3500	6000	1.7	6.0	4.0	3.8	7.8
500	10	11	16	2.6	P331_0040KX301_0030 MF EZ301U	32	32	100	12.00	12/1	3500	3500	6000	0.95	6.5	4.5	3.3	5.3
500	17	19	27	1.6	P331_0040KX301_0030 MF EZ302U	50	50	100	12.00	12/1	3500	3500	6000	1.0	6.5	4.5	3.3	5.9
500	22	26	35	1.2	P331_0040KX301_0030 MF EZ303U	50	50	100	12.00	12/1	3500	3500	6000	1.2	6.5	4.5	3.3	6.4
500	26	32	41	1.0	P331_0040KX301_0030 MF EZ401U	50	50	100	12.00	12/1	3500	3500	6000	1.7	6.5	4.5	3.3	7.8
P332KX (n_{1N} = 3000 rpm, $M_{2acc,max}$ = 75 Nm)																		
60	44	44	50	1.1	P332_0250KX301_0020 MF EZ301U	75	75	150	50.00	50/1	3500	3000	5500	1.0	5.5	3.5	5.1	5.6
75	35	36	40	1.4	P332_0200KX301_0020 MF EZ301U	75	75	150	40.00	40/1	3500	3000	5500	1.0	5.5	3.5	5.1	5.6
86	30	31	58	1.6	P332_0350KX301_0010 MF EZ301U	75	75	150	35.00	35/1	3000	2500	4500	1.2	5.5	3.5	5.2	5.6
94	28	28	35	1.6	P332_0160KX301_0020 MF EZ301U	65	65	130	32.00	32/1	3500	3000	5500	1.0	5.5	3.5	5.0	5.6
P332KX (n_{1N} = 6000 rpm, $M_{2acc,max}$ = 75 Nm)																		
100	50	53	42	1.0	P332_0200KX301_0030 MF EZ301U	75	75	150	60.00	60/1	3500	3500	6000	0.94	5.5	3.5	5.1	5.6
P431KX (n_{1N} = 3000 rpm, $M_{2acc,max}$ = 140 Nm)																		
100	27	27	17	2.8	P431_0100KX401_0030 MF EZ301U	80	80	230	30.00	30/1	3000	3000	5500	1.6	5.0	3.0	8.4	8.9
100	46	48	29	1.6	P431_0100KX401_0030 MF EZ302U	120	120	230	30.00	30/1	3000	3000	5500	1.7	5.0	3.0	8.4	9.5
100	59	63	37	1.3	P431_0100KX401_0030 MF EZ303U	120	120	230	30.00	30/1	3000	3000	5500	1.8	5.0	3.0	8.4	10
125	21	22	13	3.8	P431_0080KX401_0030 MF EZ301U	64	64	240	24.00	24/1	3000	3000	5500	1.6	5.5	3.5	8.5	8.9
125	36	39	22	2.2	P431_0080KX401_0030 MF EZ302U	110	110	240	24.00	24/1	3000	3000	5500	1.7	5.5	3.5	8.5	9.5
125	47	50	28	1.7	P431_0080KX401_0030 MF EZ303U	120	130	240	24.00	24/1	3000	3000	5500	1.8	5.5	3.5	8.5	10
125	64	69	38	1.2	P431_0080KX401_0030 MF EZ401U	120	130	240	24.00	24/1	3000	3000	5500	2.4	5.5	3.5	8.5	11
143	19	19	9.8	4.8	P431_0070KX401_0030 MF EZ301U	56	56	270	21.00	21/1	3000	3000	5500	1.6	5.5	3.5	9.2	8.9
143	32	34	17	2.8	P431_0070KX401_0030 MF EZ302U	100	100	270	21.00	21/1	3000	3000	5500	1.7	5.5	3.5	9.2	9.5
143	42	44	22	2.2	P431_0070KX401_0030 MF EZ303U	140	140	270	21.00	21/1	3000	3000	5500	1.8	5.5	3.5	9.2	10
143	56	60	30	1.6	P431_0070KX401_0030 MF EZ401U	140	140	270	21.00	21/1	3000	3000	5500	2.4	5.5	3.5	9.2	11
143	86	94	45	1.0	P431_0070KX401_0030 MF EZ501U	140	140	270	21.00	21/1	3000	3000	5500	4.3	5.5	3.5	9.2	12
150	18	18	15	4.2	P431_0100KX401_0020 MF EZ301U	54	54	230	20.00	20/1	2500	2500	5000	1.8	5.0	3.0	8.4	8.9
150	30	32	26	2.5	P431_0100KX401_0020 MF EZ302U	96	96	230	20.00	20/1	2500	2500	5000	1.9	5.0	3.0	8.4	9.5
150	40	42	34	1.9	P431_0100KX401_0020 MF EZ303U	120	120	230	20.00	20/1	2500	2500	5000	2.0	5.0	3.0	8.4	10
150	54	57	46	1.4	P431_0100KX401_0020 MF EZ401U	120	120	230	20.00	20/1	2500	2500	5000	2.6	5.0	3.0	8.4	11
188	24	26	20	3.3	P431_0080KX401_0020 MF EZ302U	76	76	240	16.00	16/1	2500	2500	5000	1.9	5.5	3.5	8.5	9.5

n_{2N} [rpm]	M_{2N} [Nm]	$M_{2,0}$ [Nm]	a_{th}	S	Type	M_{2acc} [Nm]	M_{2accHT} [Nm]	M_{2NOT} [Nm]	i	i_{exakt}	n_{1maxDB} EL1,2,5,6 [rpm]	n_{1maxDB} EL3,4 [rpm]	n_{1maxZB} [rpm]	J_1 [kgcm²]	$\Delta\varphi_2$ [arcmin]	$\Delta\varphi_{2red}$ [arcmin]	C_2 [Nm/ arcmin]	m [kg]
P431KX (n_{1N} = 3000 rpm, $M_{2acc,max}$ = 140 Nm)																		
188	32	33	25	2.5	P431_0080KX401_0020 MF EZ303U	110	110	240	16.00	16/1	2500	2500	5000	2.0	5.5	3.5	8.5	10
188	43	46	34	1.9	P431_0080KX401_0020 MF EZ401U	120	130	240	16.00	16/1	2500	2500	5000	2.6	5.5	3.5	8.5	11
188	66	72	53	1.2	P431_0080KX401_0020 MF EZ501U	120	130	240	16.00	16/1	2500	2500	5000	4.5	5.5	3.5	8.5	12
188	72	79	58	1.1	P431_0080KX401_0020 MF EZ402U	120	130	240	16.00	16/1	2500	2500	5000	3.3	5.5	3.5	8.5	12
200	23	24	13	3.7	P431_0050KX401_0030 MF EZ302U	72	72	260	15.00	15/1	3000	3000	5500	1.7	6.0	4.0	8.6	9.5
200	30	31	17	2.9	P431_0050KX401_0030 MF EZ303U	100	100	260	15.00	15/1	3000	3000	5500	1.9	6.0	4.0	8.6	10
200	40	43	22	2.1	P431_0050KX401_0030 MF EZ401U	120	120	260	15.00	15/1	3000	3000	5500	2.4	6.0	4.0	8.6	11
200	62	67	34	1.4	P431_0050KX401_0030 MF EZ501U	120	120	260	15.00	15/1	3000	3000	5500	4.4	6.0	4.0	8.6	12
200	67	75	38	1.3	P431_0050KX401_0030 MF EZ402U	120	120	260	15.00	15/1	3000	3000	5500	3.1	6.0	4.0	8.6	12
214	21	22	15	4.2	P431_0070KX401_0020 MF EZ302U	67	67	270	14.00	14/1	2500	2500	5000	1.9	5.5	3.5	9.2	9.5
214	28	29	20	3.3	P431_0070KX401_0020 MF EZ303U	94	94	270	14.00	14/1	2500	2500	5000	2.0	5.5	3.5	9.2	10
214	37	40	27	2.4	P431_0070KX401_0020 MF EZ401U	110	110	270	14.00	14/1	2500	2500	5000	2.6	5.5	3.5	9.2	11
214	58	63	41	1.6	P431_0070KX401_0020 MF EZ501U	140	140	270	14.00	14/1	2500	2500	5000	4.5	5.5	3.5	9.2	12
214	63	70	45	1.4	P431_0070KX401_0020 MF EZ402U	140	140	270	14.00	14/1	2500	2500	5000	3.3	5.5	3.5	9.2	12
250	18	19	13	3.7	P431_0040KX401_0030 MF EZ302U	57	57	210	12.00	12/1	3000	3000	5500	1.8	6.5	4.5	7.3	9.5
250	24	25	17	2.9	P431_0040KX401_0030 MF EZ303U	80	80	210	12.00	12/1	3000	3000	5500	1.9	6.5	4.5	7.3	10
250	32	34	22	2.1	P431_0040KX401_0030 MF EZ401U	97	97	210	12.00	12/1	3000	3000	5500	2.4	6.5	4.5	7.3	11
250	49	54	34	1.4	P431_0040KX401_0030 MF EZ501U	97	97	210	12.00	12/1	3000	3000	5500	4.4	6.5	4.5	7.3	12
250	54	60	38	1.3	P431_0040KX401_0030 MF EZ402U	97	97	210	12.00	12/1	3000	3000	5500	3.1	6.5	4.5	7.3	12
300	20	21	15	4.3	P431_0050KX401_0020 MF EZ303U	67	67	260	10.00	10/1	2500	2500	5000	2.1	6.0	4.0	8.6	10
300	27	29	20	3.2	P431_0050KX401_0020 MF EZ401U	81	81	260	10.00	10/1	2500	2500	5000	2.6	6.0	4.0	8.6	11
300	41	45	31	2.1	P431_0050KX401_0020 MF EZ501U	120	120	260	10.00	10/1	2500	2500	5000	4.6	6.0	4.0	8.6	12
300	45	50	34	1.9	P431_0050KX401_0020 MF EZ402U	120	120	260	10.00	10/1	2500	2500	5000	3.3	6.0	4.0	8.6	12
300	66	82	50	1.3	P431_0050KX401_0020 MF EZ404U	120	120	260	10.00	10/1	2500	2500	5000	4.7	6.0	4.0	8.6	15
300	71	76	54	1.2	P431_0050KX401_0020 MF EZ502U	120	120	260	10.00	10/1	2500	2500	5000	6.9	6.0	4.0	8.6	14
300	71	79	54	1.2	P431_0050KX401_0020 MF EZ701U	120	120	260	10.00	10/1	2500	2500	5000	10	6.0	4.0	8.6	16
375	16	17	15	4.3	P431_0040KX401_0020 MF EZ303U	54	54	210	8.000	8/1	2500	2500	5000	2.1	6.5	4.5	7.3	10
375	21	23	20	3.2	P431_0040KX401_0020 MF EZ401U	65	65	210	8.000	8/1	2500	2500	5000	2.6	6.5	4.5	7.3	11
375	33	36	31	2.1	P431_0040KX401_0020 MF EZ501U	97	97	210	8.000	8/1	2500	2500	5000	4.6	6.5	4.5	7.3	12
375	36	40	34	1.9	P431_0040KX401_0020 MF EZ402U	97	97	210	8.000	8/1	2500	2500	5000	3.3	6.5	4.5	7.3	12
375	53	66	50	1.3	P431_0040KX401_0020 MF EZ404U	97	97	210	8.000	8/1	2500	2500	5000	4.7	6.5	4.5	7.3	15
375	57	61	54	1.2	P431_0040KX401_0020 MF EZ502U	97	97	210	8.000	8/1	2500	2500	5000	6.9	6.5	4.5	7.3	14
375	57	63	54	1.2	P431_0040KX401_0020 MF EZ701U	97	97	210	8.000	8/1	2500	2500	5000	10	6.5	4.5	7.3	16
429	19	20	27	4.0	P431_0070KX401_0010 MF EZ401U	57	57	270	7.000	7/1	2500	2000	4000	3.4	5.5	3.5	9.2	11
429	29	31	42	2.6	P431_0070KX401_0010 MF EZ501U	110	110	270	7.000	7/1	2500	2000	4000	5.3	5.5	3.5	9.2	12
429	31	35	46	2.4	P431_0070KX401_0010 MF EZ402U	110	110	270	7.000	7/1	2500	2000	4000	4.1	5.5	3.5	9.2	12
429	46	58	67	1.6	P431_0070KX401_0010 MF EZ404U	140	140	270	7.000	7/1	2500	2000	4000	5.4	5.5	3.5	9.2	15
429	49	54	72	1.5	P431_0070KX401_0010 MF EZ502U	140	140	270	7.000	7/1	2500	2000	4000	7.6	5.5	3.5	9.2	14
429	49	56	72	1.5	P431_0070KX401_0010 MF EZ701U	130	130	270	7.000	7/1	2500	2000	4000	11	5.5	3.5	9.2	16
429	65	74	94	1.1	P431_0070KX401_0010 MF EZ503U	140	140	270	7.000	7/1	2500	2000	4000	10	5.5	3.5	9.2	15
500	12	13	15	4.2	P431_0030KX401_0020 MF EZ303U	40	40	150	6.000	6/1	2500	2500	5000	2.2	7.5	5.5	5.3	10
500	16	17	21	3.1	P431_0030KX401_0020 MF EZ401U	49	49	150	6.000	6/1	2500	2500	5000	2.7	7.5	5.5	5.3	11
500	25	27	32	2.0	P431_0030KX401_0020 MF EZ501U	73	73	150	6.000	6/1	2500	2500	5000	4.7	7.5	5.5	5.3	12
500	27	30	35	1.9	P431_0030KX401_0020 MF EZ402U	73	73	150	6.000	6/1	2500	2500	5000	3.4	7.5	5.5	5.3	12
500	40	49	51	1.3	P431_0030KX401_0020 MF EZ404U	73	73	150	6.000	6/1	2500	2500	5000	4.8	7.5	5.5	5.3	15
500	42	46	54	1.2	P431_0030KX401_0020 MF EZ502U	73	73	150	6.000	6/1	2500	2500	5000	7.0	7.5	5.5	5.3	14
500	42	48	54	1.2	P431_0030KX401_0020 MF EZ701U	73	73	150	6.000	6/1	2500	2500	5000	10	7.5	5.5	5.3	16
600	21	22	30	3.6	P431_0050KX401_0010 MF EZ501U	76	76	260	5.000	5/1	2500	2000	4000	5.5	6.0	4.0	8.6	12
600	22	25	33	3.3	P431_0050KX401_0010 MF EZ402U	76	76	260	5.000	5/1	2500	2000	4000	4.2	6.0	4.0	8.6	12
600	33	41	48	2.3	P431_0050KX401_0010 MF EZ404U	120	120	260	5.000	5/1	2500	2000	4000	5.6	6.0	4.0	8.6	15
600	35	38	51	2.1	P431_0050KX401_0010 MF EZ502U	120	120	260	5.000	5/1	2500	2000	4000	7.8	6.0	4.0	8.6	14
600	35	40	51	2.1	P431_0050KX401_0010 MF EZ701U	96	96	260	5.000	5/1	2500	2000	4000	11	6.0	4.0	8.6	16
600	46	53	67	1.6	P431_0050KX401_0010 MF EZ503U	120	120	260	5.000	5/1	2500	2000	4000	10	6.0	4.0	8.6	15
600	57	69	83	1.3	P431_0050KX401_0010 MF EZ702U	120	120	260	5.000	5/1	2500	2000	4000	16	6.0	4.0	8.6	18
600	64	76	94	1.2	P431_0050KX401_0010 MF EZ505U	120	120	260	5.000	5/1	2500	2000	4000	15	6.0	4.0	8.6	18
750	16	18	26	4.1	P431_0040KX401_0010 MF EZ501U	61	61	210	4.000	4/1	2500	2000	4000	5.6	6.5	4.5	7.3	12
750	18	20	29	3.8	P431_0040KX401_0010 MF EZ402U	61	61	210	4.000	4/1	2500	2000	4000	4.3	6.5	4.5	7.3	12
750	26	33	42	2.6	P431_0040KX401_0010 MF EZ404U	97	97	210	4.000	4/1	2500	2000	4000	5.7	6.5	4.5	7.3	15
750	28	31	45	2.4	P431_0040KX401_0010 MF EZ502U	97	97	210	4.000	4/1	2500	2000	4000	7.9	6.5	4.5	7.3	14
750	28	32	45	2.4	P431_0040KX401_0010 MF EZ701U	76	76	210	4.000	4/1	2500	2000	4000	11	6.5	4.5	7.3	16
750	37	42	59	1.8	P431_0040KX401_0010 MF EZ503U	97	97	210	4.000	4/1	2500	2000	4000	10	6.5	4.5	7.3	15
750	46	55	73	1.5	P431_0040KX401_0010 MF EZ702U	97	97	210	4.000	4/1	2500	2000	4000	16	6.5	4.5	7.3	18
750	52	61	82	1.3	P431_0040KX401_0010 MF EZ505U	97	97	210	4.000	4/1	2500	2000	4000	15	6.5	4.5	7.3	18
1000	12	13	30	3.5	P431_0030KX401_0010 MF EZ501U	46	46	150	3.000	3/1	2500	2000	4000	6.0	7.5	5.5	5.3	12

n_{2N} [rpm]	M_{2N} [Nm]	$M_{2,0}$ [Nm]	a_{th}	S	Type	M_{2acc} [Nm]	M_{2accHT} [Nm]	M_{2NOT} [Nm]	i	i_{exakt}	n_{1maxDB} EL1,2,5,6 [rpm]	n_{1maxDB} EL3,4 [rpm]	n_{1maxZB} [rpm]	J_1 [kgcm²]	$\Delta\varphi_2$ [arcmin]	$\Delta\varphi_{2red}$ [arcmin]	C_2 [Nm/ arcmin]	m [kg]
P431KX (n_{1N} = 3000 rpm, $M_{2acc,max}$ = 140 Nm)																		
1000	13	15	33	3.2	P431_0030KX401_0010 MF EZ402U	46	46	150	3.000	3/1	2500	2000	4000	4.8	7.5	5.5	5.3	12
1000	20	25	49	2.2	P431_0030KX401_0010 MF EZ404U	73	73	150	3.000	3/1	2500	2000	4000	6.1	7.5	5.5	5.3	15
1000	21	23	52	2.1	P431_0030KX401_0010 MF EZ502U	73	73	150	3.000	3/1	2500	2000	4000	8.3	7.5	5.5	5.3	14
1000	21	24	52	2.1	P431_0030KX401_0010 MF EZ701U	57	57	150	3.000	3/1	2500	2000	4000	12	7.5	5.5	5.3	16
1000	28	32	69	1.6	P431_0030KX401_0010 MF EZ503U	73	73	150	3.000	3/1	2500	2000	4000	11	7.5	5.5	5.3	15
1000	34	41	85	1.3	P431_0030KX401_0010 MF EZ702U	73	73	150	3.000	3/1	2500	2000	4000	17	7.5	5.5	5.3	18
1000	39	46	96	1.1	P431_0030KX401_0010 MF EZ505U	73	73	150	3.000	3/1	2500	2000	4000	15	7.5	5.5	5.3	18
P432KX (n_{1N} = 3000 rpm, $M_{2acc,max}$ = 130 Nm)																		
29	91	93	38	1.1	P432_0350KX301_0030 MF EZ301U	130	140	270	105.0	105/1	3500	3500	6000	0.94	5.5	3.5	12	7.6
30	87	89	49	1.2	P432_0500KX301_0020 MF EZ301U	130	140	260	100.0	100/1	3500	3000	5500	1.0	5.0	3.0	12	7.6
36	73	75	32	1.3	P432_0280KX301_0030 MF EZ301U	130	130	260	84.00	84/1	3500	3500	6000	0.94	5.5	3.5	12	7.6
38	70	71	46	1.3	P432_0400KX301_0020 MF EZ301U	130	130	260	80.00	80/1	3500	3000	5500	1.0	5.5	3.5	12	7.6
40	65	67	27	1.5	P432_0250KX301_0030 MF EZ301U	130	140	270	75.00	75/1	3500	3500	6000	0.94	5.5	3.5	12	7.6
43	61	62	34	1.7	P432_0350KX301_0020 MF EZ301U	130	140	270	70.00	70/1	3500	3000	5500	1.0	5.5	3.5	12	7.6
47	56	57	35	1.6	P432_0320KX301_0020 MF EZ301U	130	130	250	64.00	64/1	3500	3000	5500	1.0	5.5	3.5	9.4	7.6
50	52	53	23	1.8	P432_0200KX301_0030 MF EZ301U	130	140	270	60.00	60/1	3500	3500	6000	0.95	5.5	3.5	12	7.6
50	89	94	40	1.1	P432_0200KX301_0030 MF EZ302U	130	140	270	60.00	60/1	3500	3500	6000	1.0	5.5	3.5	12	8.2
54	49	50	29	1.9	P432_0280KX301_0020 MF EZ301U	130	130	260	56.00	56/1	3500	3000	5500	1.0	5.5	3.5	12	7.6
54	83	88	50	1.1	P432_0280KX301_0020 MF EZ302U	130	130	260	56.00	56/1	3500	3000	5500	1.1	5.5	3.5	12	8.2
60	44	44	25	2.3	P432_0250KX301_0020 MF EZ301U	130	130	270	50.00	50/1	3500	3000	5500	1.0	5.5	3.5	12	7.6
60	74	79	42	1.3	P432_0250KX301_0020 MF EZ302U	130	140	270	50.00	50/1	3500	3000	5500	1.1	5.5	3.5	12	8.2
60	97	102	55	1.0	P432_0250KX301_0020 MF EZ303U	130	140	270	50.00	50/1	3500	3000	5500	1.2	5.5	3.5	12	8.7
75	35	36	21	2.7	P432_0200KX301_0020 MF EZ301U	100	100	270	40.00	40/1	3500	3000	5500	1.0	5.5	3.5	12	7.6
75	60	63	36	1.6	P432_0200KX301_0020 MF EZ302U	130	140	270	40.00	40/1	3500	3000	5500	1.1	5.5	3.5	12	8.2
75	77	82	47	1.2	P432_0200KX301_0020 MF EZ303U	130	140	270	40.00	40/1	3500	3000	5500	1.2	5.5	3.5	12	8.7
86	30	31	29	3.4	P432_0350KX301_0010 MF EZ301U	92	92	270	35.00	35/1	3000	2500	4500	1.2	5.5	3.5	12	7.6
86	52	55	49	2.0	P432_0350KX301_0010 MF EZ302U	130	140	270	35.00	35/1	3000	2500	4500	1.3	5.5	3.5	12	8.2
86	68	72	64	1.5	P432_0350KX301_0010 MF EZ303U	130	140	270	35.00	35/1	3000	2500	4500	1.4	5.5	3.5	12	8.7
86	92	98	86	1.1	P432_0350KX301_0010 MF EZ401U	130	140	270	35.00	35/1	3000	2500	4500	2.0	5.5	3.5	12	10
94	28	28	18	3.2	P432_0160KX301_0020 MF EZ301U	84	84	260	32.00	32/1	3500	3000	5500	1.0	5.5	3.5	11	7.6
94	48	50	31	1.9	P432_0160KX301_0020 MF EZ302U	130	130	260	32.00	32/1	3500	3000	5500	1.1	5.5	3.5	11	8.2
94	62	66	40	1.4	P432_0160KX301_0020 MF EZ303U	130	130	260	32.00	32/1	3500	3000	5500	1.2	5.5	3.5	11	8.7
94	84	90	54	1.1	P432_0160KX301_0020 MF EZ401U	130	130	260	32.00	32/1	3500	3000	5500	1.8	5.5	3.5	11	10
P432KX (n_{1N} = 6000 rpm, $M_{2acc,max}$ = 130 Nm)																		
57	87	93	36	1.2	P432_0350KX301_0030 MF EZ301U	130	140	270	105.0	105/1	3500	3500	6000	0.94	5.5	3.5	12	7.6
71	70	75	31	1.4	P432_0280KX301_0030 MF EZ301U	130	130	260	84.00	84/1	3500	3500	6000	0.94	5.5	3.5	12	7.6
80	62	67	26	1.6	P432_0250KX301_0030 MF EZ301U	130	140	270	75.00	75/1	3500	3500	6000	0.94	5.5	3.5	12	7.6
100	50	53	22	1.9	P432_0200KX301_0030 MF EZ301U	130	140	270	60.00	60/1	3500	3500	6000	0.95	5.5	3.5	12	7.6
100	84	94	37	1.1	P432_0200KX301_0030 MF EZ302U	130	140	270	60.00	60/1	3500	3500	6000	1.0	5.5	3.5	12	8.2
P531KX (n_{1N} = 3000 rpm, $M_{2acc,max}$ = 330 Nm)																		
100	80	86	23	2.2	P531_0100KX501_0030 MF EZ401U	240	240	580	30.00	30/1	3000	3000	5000	5.7	4.0	2.0	24	17
100	123	135	36	1.5	P531_0100KX501_0030 MF EZ501U	290	290	580	30.00	30/1	3000	3000	5000	7.7	4.0	2.0	24	18
100	135	149	39	1.3	P531_0100KX501_0030 MF EZ402U	290	290	580	30.00	30/1	3000	3000	5000	6.4	4.0	2.0	24	18
125	64	69	17	3.1	P531_0080KX501_0030 MF EZ401U	190	190	590	24.00	24/1	3000	3000	5000	5.7	4.5	2.5	21	17
125	99	108	26	2.0	P531_0080KX501_0030 MF EZ501U	300	300	590	24.00	24/1	3000	3000	5000	7.7	4.5	2.5	21	18
125	108	119	28	1.9	P531_0080KX501_0030 MF EZ402U	300	300	590	24.00	24/1	3000	3000	5000	6.4	4.5	2.5	21	18
125	158	197	42	1.3	P531_0080KX501_0030 MF EZ404U	300	300	590	24.00	24/1	3000	3000	5000	7.8	4.5	2.5	21	20
125	170	183	45	1.2	P531_0080KX501_0030 MF EZ502U	300	300	590	24.00	24/1	3000	3000	5000	10	4.5	2.5	21	20
125	170	190	45	1.2	P531_0080KX501_0030 MF EZ701U	300	300	590	24.00	24/1	3000	3000	5000	13	4.5	2.5	21	21
143	56	60	14	3.7	P531_0070KX501_0030 MF EZ401U	170	170	670	21.00	21/1	3000	3000	5000	5.7	4.5	2.5	25	17
143	86	94	22	2.4	P531_0070KX501_0030 MF EZ501U	320	320	670	21.00	21/1	3000	3000	5000	7.7	4.5	2.5	25	18
143	94	104	24	2.2	P531_0070KX501_0030 MF EZ402U	320	320	670	21.00	21/1	3000	3000	5000	6.4	4.5	2.5	25	18
143	138	173	35	1.5	P531_0070KX501_0030 MF EZ404U	330	380	670	21.00	21/1	3000	3000	5000	7.8	4.5	2.5	25	20
143	148	161	37	1.4	P531_0070KX501_0030 MF EZ502U	330	380	670	21.00	21/1	3000	3000	5000	10	4.5	2.5	25	20
143	148	167	37	1.4	P531_0070KX501_0030 MF EZ701U	330	380	670	21.00	21/1	3000	3000	5000	13	4.5	2.5	25	21
143	195	223	49	1.1	P531_0070KX501_0030 MF EZ503U	330	380	670	21.00	21/1	3000	3000	5000	12	4.5	2.5	25	21
150	54	57	21	3.4	P531_0100KX501_0020 MF EZ401U	160	160	580	20.00	20/1	2500	2500	4500	6.2	4.0	2.0	24	17
150	82	90	33	2.2	P531_0100KX501_0020 MF EZ501U	290	290	580	20.00	20/1	2500	2500	4500	8.2	4.0	2.0	24	18
150	90	99	36	2.0	P531_0100KX501_0020 MF EZ402U	290	290	580	20.00	20/1	2500	2500	4500	6.9	4.0	2.0	24	18
150	132	164	52	1.4	P531_0100KX501_0020 MF EZ404U	290	290	580	20.00	20/1	2500	2500	4500	8.3	4.0	2.0	24	20
150	141	153	56	1.3	P531_0100KX501_0020 MF EZ502U	290	290	580	20.00	20/1	2500	2500	4500	11	4.0	2.0	24	20
150	141	159	56	1.3	P531_0100KX501_0020 MF EZ701U	290	290	580	20.00	20/1	2500	2500	4500	14	4.0	2.0	24	21
188	43	46	15	4.7	P531_0080KX501_0020 MF EZ401U	130	130	590	16.00	16/1	2500	2500	4500	6.3	4.5	2.5	21	17

n_{2N} [rpm]	M_{2N} [Nm]	$M_{2,0}$ [Nm]	a_{th}	S	Type	M_{2acc} [Nm]	M_{2accHT} [Nm]	M_{2NOT} [Nm]	i	i_{exakt}	n_{1maxDB} EL1,2,5,6 [rpm]	n_{1maxDB} EL3,4 [rpm]	n_{1maxZB} [rpm]	J_1 [kgcm²]	$\Delta\varphi_2$ [arcmin]	$\Delta\varphi_{2red}$ [arcmin]	C_2 [Nm/arcmin]	m [kg]
P531KX (n_{1N} = 3000 rpm, $M_{2acc,max}$ = 330 Nm)																		
188	66	72	23	3.0	P531_0080KX501_0020 MF EZ501U	240	240	590	16.00	16/1	2500	2500	4500	8.2	4.5	2.5	21	18
188	72	79	26	2.8	P531_0080KX501_0020 MF EZ402U	240	240	590	16.00	16/1	2500	2500	4500	7.0	4.5	2.5	21	18
188	105	131	38	1.9	P531_0080KX501_0020 MF EZ404U	300	300	590	16.00	16/1	2500	2500	4500	8.3	4.5	2.5	21	20
188	113	122	40	1.8	P531_0080KX501_0020 MF EZ502U	300	300	590	16.00	16/1	2500	2500	4500	11	4.5	2.5	21	20
188	113	127	40	1.8	P531_0080KX501_0020 MF EZ701U	300	300	590	16.00	16/1	2500	2500	4500	14	4.5	2.5	21	21
188	148	170	53	1.3	P531_0080KX501_0020 MF EZ503U	300	300	590	16.00	16/1	2500	2500	4500	13	4.5	2.5	21	21
188	183	220	65	1.1	P531_0080KX501_0020 MF EZ702U	300	300	590	16.00	16/1	2500	2500	4500	19	4.5	2.5	21	24
200	62	67	15	3.4	P531_0050KX501_0030 MF EZ501U	230	230	640	15.00	15/1	3000	3000	5000	7.8	5.0	3.0	22	18
200	67	75	17	3.1	P531_0050KX501_0030 MF EZ402U	230	230	640	15.00	15/1	3000	3000	5000	6.5	5.0	3.0	22	18
200	99	123	25	2.1	P531_0050KX501_0030 MF EZ404U	310	310	640	15.00	15/1	3000	3000	5000	7.8	5.0	3.0	22	20
200	106	115	26	2.0	P531_0050KX501_0030 MF EZ502U	310	310	640	15.00	15/1	3000	3000	5000	10	5.0	3.0	22	20
200	106	119	26	2.0	P531_0050KX501_0030 MF EZ701U	290	290	640	15.00	15/1	3000	3000	5000	13	5.0	3.0	22	21
200	139	159	35	1.5	P531_0050KX501_0030 MF EZ503U	310	310	640	15.00	15/1	3000	3000	5000	12	5.0	3.0	22	21
200	172	206	43	1.2	P531_0050KX501_0030 MF EZ702U	310	310	640	15.00	15/1	3000	3000	5000	19	5.0	3.0	22	24
200	193	229	48	1.1	P531_0050KX501_0030 MF EZ505U	310	310	640	15.00	15/1	3000	3000	5000	17	5.0	3.0	22	24
214	58	63	20	3.7	P531_0070KX501_0020 MF EZ501U	210	210	670	14.00	14/1	2500	2500	4500	8.3	4.5	2.5	25	18
214	63	70	21	3.3	P531_0070KX501_0020 MF EZ402U	210	210	670	14.00	14/1	2500	2500	4500	7.0	4.5	2.5	25	18
214	92	115	31	2.3	P531_0070KX501_0020 MF EZ404U	330	380	670	14.00	14/1	2500	2500	4500	8.3	4.5	2.5	25	20
214	99	107	34	2.1	P531_0070KX501_0020 MF EZ502U	330	380	670	14.00	14/1	2500	2500	4500	11	4.5	2.5	25	20
214	99	111	34	2.1	P531_0070KX501_0020 MF EZ701U	270	270	670	14.00	14/1	2500	2500	4500	14	4.5	2.5	25	21
214	130	148	44	1.6	P531_0070KX501_0020 MF EZ503U	330	380	670	14.00	14/1	2500	2500	4500	13	4.5	2.5	25	21
214	161	193	55	1.3	P531_0070KX501_0020 MF EZ702U	330	380	670	14.00	14/1	2500	2500	4500	19	4.5	2.5	25	24
214	181	214	61	1.2	P531_0070KX501_0020 MF EZ505U	330	380	670	14.00	14/1	2500	2500	4500	18	4.5	2.5	25	24
250	49	54	15	3.4	P531_0040KX501_0030 MF EZ501U	180	180	520	12.00	12/1	3000	3000	5000	7.8	5.5	3.5	18	18
250	54	60	17	3.1	P531_0040KX501_0030 MF EZ402U	180	180	520	12.00	12/1	3000	3000	5000	6.5	5.5	3.5	18	18
250	79	99	25	2.1	P531_0040KX501_0030 MF EZ404U	240	240	520	12.00	12/1	3000	3000	5000	7.9	5.5	3.5	18	20
250	85	92	26	2.0	P531_0040KX501_0030 MF EZ502U	240	240	520	12.00	12/1	3000	3000	5000	10	5.5	3.5	18	20
250	85	95	26	2.0	P531_0040KX501_0030 MF EZ701U	230	230	520	12.00	12/1	3000	3000	5000	13	5.5	3.5	18	21
250	111	127	35	1.5	P531_0040KX501_0030 MF EZ503U	240	240	520	12.00	12/1	3000	3000	5000	12	5.5	3.5	18	21
250	138	165	43	1.2	P531_0040KX501_0030 MF EZ702U	240	240	520	12.00	12/1	3000	3000	5000	19	5.5	3.5	18	24
250	155	183	48	1.1	P531_0040KX501_0030 MF EZ505U	240	240	520	12.00	12/1	3000	3000	5000	17	5.5	3.5	18	24
300	45	50	15	4.7	P531_0050KX501_0020 MF EZ402U	150	150	640	10.00	10/1	2500	2500	4500	7.1	5.0	3.0	22	18
300	66	82	22	3.2	P531_0050KX501_0020 MF EZ404U	280	280	640	10.00	10/1	2500	2500	4500	8.4	5.0	3.0	22	20
300	71	76	24	3.0	P531_0050KX501_0020 MF EZ502U	300	300	640	10.00	10/1	2500	2500	4500	11	5.0	3.0	22	20
300	71	79	24	3.0	P531_0050KX501_0020 MF EZ701U	190	190	640	10.00	10/1	2500	2500	4500	14	5.0	3.0	22	21
300	93	106	31	2.3	P531_0050KX501_0020 MF EZ503U	310	310	640	10.00	10/1	2500	2500	4500	13	5.0	3.0	22	21
300	115	138	39	1.8	P531_0050KX501_0020 MF EZ702U	310	310	640	10.00	10/1	2500	2500	4500	19	5.0	3.0	22	24
300	129	153	43	1.6	P531_0050KX501_0020 MF EZ505U	310	310	640	10.00	10/1	2500	2500	4500	18	5.0	3.0	22	24
300	158	199	53	1.3	P531_0050KX501_0020 MF EZ703U	310	310	640	10.00	10/1	2500	2500	4500	27	5.0	3.0	22	26
375	36	40	15	4.7	P531_0040KX501_0020 MF EZ402U	120	120	520	8.000	8/1	2500	2500	4500	7.2	5.5	3.5	18	18
375	53	66	22	3.2	P531_0040KX501_0020 MF EZ404U	220	220	520	8.000	8/1	2500	2500	4500	8.5	5.5	3.5	18	20
375	57	61	24	3.0	P531_0040KX501_0020 MF EZ502U	240	240	520	8.000	8/1	2500	2500	4500	11	5.5	3.5	18	20
375	57	63	24	3.0	P531_0040KX501_0020 MF EZ701U	150	150	520	8.000	8/1	2500	2500	4500	14	5.5	3.5	18	21
375	74	85	31	2.3	P531_0040KX501_0020 MF EZ503U	240	240	520	8.000	8/1	2500	2500	4500	13	5.5	3.5	18	21
375	92	110	39	1.8	P531_0040KX501_0020 MF EZ702U	240	240	520	8.000	8/1	2500	2500	4500	19	5.5	3.5	18	24
375	103	122	43	1.6	P531_0040KX501_0020 MF EZ505U	240	240	520	8.000	8/1	2500	2500	4500	18	5.5	3.5	18	24
375	126	159	53	1.3	P531_0040KX501_0020 MF EZ703U	240	240	520	8.000	8/1	2500	2500	4500	27	5.5	3.5	18	26
429	46	58	30	4.0	P531_0070KX501_0010 MF EZ404U	190	190	670	7.000	7/1	2500	2000	3500	11	4.5	2.5	25	20
429	49	54	32	3.7	P531_0070KX501_0010 MF EZ502U	210	210	670	7.000	7/1	2500	2000	3500	13	4.5	2.5	25	20
429	49	56	32	3.7	P531_0070KX501_0010 MF EZ701U	130	130	670	7.000	7/1	2500	2000	3500	16	4.5	2.5	25	21
429	65	74	42	2.8	P531_0070KX501_0010 MF EZ503U	290	290	670	7.000	7/1	2500	2000	3500	15	4.5	2.5	25	21
429	80	96	52	2.3	P531_0070KX501_0010 MF EZ702U	270	270	670	7.000	7/1	2500	2000	3500	22	4.5	2.5	25	24
429	90	107	59	2.0	P531_0070KX501_0010 MF EZ505U	330	380	670	7.000	7/1	2500	2000	3500	20	4.5	2.5	25	24
429	110	139	72	1.7	P531_0070KX501_0010 MF EZ703U	330	380	670	7.000	7/1	2500	2000	3500	29	4.5	2.5	25	26
429	142	202	93	1.3	P531_0070KX501_0010 MF EZ705U	330	380	670	7.000	7/1	2500	2000	3500	42	4.5	2.5	25	31
500	25	27	15	4.9	P531_0030KX501_0020 MF EZ501U	92	92	390	6.000	6/1	2500	2500	4500	8.9	6.5	4.5	13	18
500	27	30	16	4.5	P531_0030KX501_0020 MF EZ402U	92	92	390	6.000	6/1	2500	2500	4500	7.6	6.5	4.5	13	18
500	40	49	24	3.0	P531_0030KX501_0020 MF EZ404U	170	170	390	6.000	6/1	2500	2500	4500	8.9	6.5	4.5	13	20
500	42	46	25	2.8	P531_0030KX501_0020 MF EZ502U	180	180	390	6.000	6/1	2500	2500	4500	11	6.5	4.5	13	20
500	42	48	25	2.8	P531_0030KX501_0020 MF EZ701U	110	110	390	6.000	6/1	2500	2500	4500	14	6.5	4.5	13	21
500	56	64	33	2.2	P531_0030KX501_0020 MF EZ503U	180	180	390	6.000	6/1	2500	2500	4500	14	6.5	4.5	13	21
500	69	83	41	1.7	P531_0030KX501_0020 MF EZ702U	180	180	390	6.000	6/1	2500	2500	4500	20	6.5	4.5	13	24
500	77	92	46	1.6	P531_0030KX501_0020 MF EZ505U	180	180	390	6.000	6/1	2500	2500	4500	18	6.5	4.5	13	24
500	95	119	56	1.3	P531_0030KX501_0020 MF EZ703U	180	180	390	6.000	6/1	2500	2500	4500	28	6.5	4.5	13	26

n_{2N} [rpm]	M_{2N} [Nm]	$M_{2,0}$ [Nm]	a_{th}	S	Type	M_{2acc} [Nm]	M_{2accHT} [Nm]	M_{2NOT} [Nm]	i	i_{exakt}	n_{1maxDB} EL1,2,5,6 [rpm]	n_{1maxDB} EL3,4 [rpm]	n_{1maxZB} [rpm]	J_1 [kgcm²]	$\Delta\varphi_2$ [arcmin]	$\Delta\varphi_{2red}$ [arcmin]	C_2 [Nm/ arcmin]	m [kg]
P531KX (n_{1N} = 3000 rpm, $M_{2acc,max}$ = 330 Nm)																		
600	46	53	30	4.0	P531_0050KX501_0010 MF EZ503U	210	210	640	5.000	5/1	2500	2000	3500	16	5.0	3.0	22	21
600	57	69	38	3.2	P531_0050KX501_0010 MF EZ702U	200	200	640	5.000	5/1	2500	2000	3500	22	5.0	3.0	22	24
600	64	76	42	2.8	P531_0050KX501_0010 MF EZ505U	310	310	640	5.000	5/1	2500	2000	3500	20	5.0	3.0	22	24
600	79	99	52	2.3	P531_0050KX501_0010 MF EZ703U	310	310	640	5.000	5/1	2500	2000	3500	30	5.0	3.0	22	26
600	102	144	67	1.8	P531_0050KX501_0010 MF EZ705U	310	310	640	5.000	5/1	2500	2000	3500	42	5.0	3.0	22	31
750	37	42	26	4.6	P531_0040KX501_0010 MF EZ503U	160	160	520	4.000	4/1	2500	2000	3500	16	5.5	3.5	18	21
750	46	55	32	3.7	P531_0040KX501_0010 MF EZ702U	160	160	520	4.000	4/1	2500	2000	3500	22	5.5	3.5	18	24
750	52	61	37	3.3	P531_0040KX501_0010 MF EZ505U	240	240	520	4.000	4/1	2500	2000	3500	21	5.5	3.5	18	24
750	63	79	45	2.7	P531_0040KX501_0010 MF EZ703U	240	240	520	4.000	4/1	2500	2000	3500	30	5.5	3.5	18	26
750	81	115	58	2.1	P531_0040KX501_0010 MF EZ705U	240	240	520	4.000	4/1	2500	2000	3500	43	5.5	3.5	18	31
1000	21	23	24	4.9	P531_0030KX501_0010 MF EZ502U	89	89	390	3.000	3/1	2500	2000	3500	15	6.5	4.5	13	20
1000	21	24	24	4.9	P531_0030KX501_0010 MF EZ701U	57	57	390	3.000	3/1	2500	2000	3500	19	6.5	4.5	13	21
1000	28	32	32	3.8	P531_0030KX501_0010 MF EZ503U	120	120	390	3.000	3/1	2500	2000	3500	18	6.5	4.5	13	21
1000	34	41	39	3.0	P531_0030KX501_0010 MF EZ702U	120	120	390	3.000	3/1	2500	2000	3500	24	6.5	4.5	13	24
1000	39	46	44	2.7	P531_0030KX501_0010 MF EZ505U	180	180	390	3.000	3/1	2500	2000	3500	22	6.5	4.5	13	24
1000	47	60	54	2.2	P531_0030KX501_0010 MF EZ703U	180	180	390	3.000	3/1	2500	2000	3500	32	6.5	4.5	13	26
1000	61	87	70	1.7	P531_0030KX501_0010 MF EZ705U	180	180	390	3.000	3/1	2500	2000	3500	44	6.5	4.5	13	31
P531KX (n_{1N} = 4500 rpm, $M_{2acc,max}$ = 330 Nm)																		
300	136	219	39	1.4	P531_0050KX501_0030 MF EZ505U	310	310	640	15.00	15/1	3000	3000	5000	17	5.0	3.0	22	24
321	127	205	45	1.6	P531_0070KX501_0020 MF EZ505U	330	380	670	14.00	14/1	2500	2500	4500	18	4.5	2.5	25	24
375	109	175	39	1.4	P531_0040KX501_0030 MF EZ505U	240	240	520	12.00	12/1	3000	3000	5000	17	5.5	3.5	18	24
450	91	146	35	2.0	P531_0050KX501_0020 MF EZ505U	310	310	640	10.00	10/1	2500	2500	4500	18	5.0	3.0	22	24
450	116	191	45	1.6	P531_0050KX501_0020 MF EZ703U	310	310	640	10.00	10/1	2500	2500	4500	27	5.0	3.0	22	26
563	73	117	35	2.0	P531_0040KX501_0020 MF EZ505U	240	240	520	8.000	8/1	2500	2500	4500	18	5.5	3.5	18	24
563	92	153	45	1.6	P531_0040KX501_0020 MF EZ703U	240	240	520	8.000	8/1	2500	2500	4500	27	5.5	3.5	18	26
750	54	88	35	2.0	P531_0030KX501_0020 MF EZ505U	180	180	390	6.000	6/1	2500	2500	4500	18	6.5	4.5	13	24
750	69	115	45	1.6	P531_0030KX501_0020 MF EZ703U	180	180	390	6.000	6/1	2500	2500	4500	28	6.5	4.5	13	26
P532KX (n_{1N} = 3000 rpm, $M_{2acc,max}$ = 360 Nm)																		
14	183	187	33	1.4	P532_0700KX401_0030 MF EZ301U	350	360	690	210.0	210/1	3000	3000	5500	1.6	4.0	2.0	30	13
15	174	178	51	1.3	P532_1000KX401_0020 MF EZ301U	290	290	580	200.0	200/1	2500	2500	5000	1.8	4.0	2.0	26	13
20	131	133	23	2.1	P532_0500KX401_0030 MF EZ301U	350	350	700	150.0	150/1	3000	3000	5500	1.6	4.0	2.0	32	13
20	223	236	39	1.2	P532_0500KX401_0030 MF EZ302U	350	350	700	150.0	150/1	3000	3000	5500	1.7	4.0	2.0	32	14
21	122	124	30	2.2	P532_0700KX401_0020 MF EZ301U	350	360	690	140.0	140/1	2500	2500	5000	1.8	4.0	2.0	30	13
21	208	220	51	1.3	P532_0700KX401_0020 MF EZ302U	350	360	690	140.0	140/1	2500	2500	5000	1.9	4.0	2.0	30	14
25	104	107	23	2.0	P532_0400KX401_0030 MF EZ301U	300	300	600	120.0	120/1	3000	3000	5500	1.6	4.5	2.5	31	13
25	179	189	40	1.2	P532_0400KX401_0030 MF EZ302U	300	300	600	120.0	120/1	3000	3000	5500	1.7	4.5	2.5	31	14
29	91	93	16	3.0	P532_0350KX401_0030 MF EZ301U	280	280	700	105.0	105/1	3000	3000	5500	1.6	4.5	2.5	32	13
29	156	165	27	1.7	P532_0350KX401_0030 MF EZ302U	350	350	700	105.0	105/1	3000	3000	5500	1.7	4.5	2.5	32	14
29	203	215	36	1.3	P532_0350KX401_0030 MF EZ303U	350	350	700	105.0	105/1	3000	3000	5500	1.8	4.5	2.5	32	14
30	87	89	21	3.1	P532_0500KX401_0020 MF EZ301U	260	260	700	100.0	100/1	2500	2500	5000	1.8	4.0	2.0	32	13
30	149	157	36	1.8	P532_0500KX401_0020 MF EZ302U	350	350	700	100.0	100/1	2500	2500	5000	1.9	4.0	2.0	32	14
30	194	205	46	1.4	P532_0500KX401_0020 MF EZ303U	350	350	700	100.0	100/1	2500	2500	5000	2.0	4.0	2.0	32	14
36	73	75	15	3.2	P532_0280KX401_0030 MF EZ301U	220	220	600	84.00	84/1	3000	3000	5500	1.6	4.5	2.5	31	13
36	125	132	26	1.8	P532_0280KX401_0030 MF EZ302U	300	300	600	84.00	84/1	3000	3000	5500	1.7	4.5	2.5	31	14
36	163	172	33	1.4	P532_0280KX401_0030 MF EZ303U	300	300	600	84.00	84/1	3000	3000	5500	1.8	4.5	2.5	31	14
38	70	71	21	3.1	P532_0400KX401_0020 MF EZ301U	210	210	600	80.00	80/1	2500	2500	5000	1.8	4.5	2.5	31	13
38	119	126	36	1.8	P532_0400KX401_0020 MF EZ302U	300	300	600	80.00	80/1	2500	2500	5000	1.9	4.5	2.5	31	14
38	155	164	47	1.4	P532_0400KX401_0020 MF EZ303U	300	300	600	80.00	80/1	2500	2500	5000	2.0	4.5	2.5	31	14
38	210	225	63	1.0	P532_0400KX401_0020 MF EZ401U	300	300	600	80.00	80/1	2500	2500	5000	2.6	4.5	2.5	31	16
40	65	67	12	4.0	P532_0250KX401_0030 MF EZ301U	200	200	710	75.00	75/1	3000	3000	5500	1.6	4.5	2.5	31	13
40	112	118	20	2.3	P532_0250KX401_0030 MF EZ302U	350	350	710	75.00	75/1	3000	3000	5500	1.7	4.5	2.5	31	14
40	145	154	26	1.8	P532_0250KX401_0030 MF EZ303U	360	360	710	75.00	75/1	3000	3000	5500	1.9	4.5	2.5	31	14
40	197	211	36	1.3	P532_0250KX401_0030 MF EZ401U	360	360	710	75.00	75/1	3000	3000	5500	2.4	4.5	2.5	31	16
43	61	62	14	4.4	P532_0350KX401_0020 MF EZ301U	180	180	700	70.00	70/1	2500	2500	5000	1.8	4.5	2.5	32	13
43	104	110	25	2.6	P532_0350KX401_0020 MF EZ302U	330	330	700	70.00	70/1	2500	2500	5000	1.9	4.5	2.5	32	14
43	136	143	32	2.0	P532_0350KX401_0020 MF EZ303U	350	350	700	70.00	70/1	2500	2500	5000	2.0	4.5	2.5	32	14
43	183	197	44	1.5	P532_0350KX401_0020 MF EZ401U	350	350	700	70.00	70/1	2500	2500	5000	2.6	4.5	2.5	32	16
47	56	57	15	4.3	P532_0320KX401_0020 MF EZ301U	170	170	620	64.00	64/1	2500	2500	5000	1.9	4.5	2.5	25	13
47	95	101	25	2.5	P532_0320KX401_0020 MF EZ302U	300	300	620	64.00	64/1	2500	2500	5000	2.0	4.5	2.5	25	14
47	124	131	33	1.9	P532_0320KX401_0020 MF EZ303U	310	360	620	64.00	64/1	2500	2500	5000	2.1	4.5	2.5	25	14
47	168	180	45	1.4	P532_0320KX401_0020 MF EZ401U	310	360	620	64.00	64/1	2500	2500	5000	2.6	4.5	2.5	25	16
50	52	53	9.9	4.8	P532_0200KX401_0030 MF EZ301U	160	160	710	60.00	60/1	3000	3000	5500	1.7	4.5	2.5	31	13
50	89	94	17	2.8	P532_0200KX401_0030 MF EZ302U	280	280	710	60.00	60/1	3000	3000	5500	1.8	4.5	2.5	31	14
50	116	123	22	2.2	P532_0200KX401_0030 MF EZ303U	360	360	710	60.00	60/1	3000	3000	5500	1.9	4.5	2.5	31	14

n_{2N} [rpm]	M_{2N} [Nm]	$M_{2,0}$ [Nm]	a_{th}	S	Type	M_{2acc} [Nm]	M_{2accHT} [Nm]	M_{2NOT} [Nm]	i	i_{exakt}	n_{1maxDB} EL1,2,5,6 [rpm]	n_{1maxDB} EL3,4 [rpm]	n_{1maxZB} [rpm]	J_1 [kgcm²]	$\Delta\varphi_2$ [arcmin]	$\Delta\varphi_{2red}$ [arcmin]	C_2 [Nm/arcmin]	m [kg]
P532KX (n_{1N} = 3000 rpm, $M_{2acc,max}$ = 360 Nm)																		
50	157	168	30	1.6	P532_0200KX401_0030 MF EZ401U	360	360	710	60.00	60/1	3000	3000	5500	2.4	4.5	2.5	31	16
50	241	264	46	1.0	P532_0200KX401_0030 MF EZ501U	360	360	710	60.00	60/1	3000	3000	5500	4.4	4.5	2.5	31	17
54	49	50	14	4.7	P532_0280KX401_0020 MF EZ301U	150	150	600	56.00	56/1	2500	2500	5000	1.8	4.5	2.5	31	13
54	83	88	23	2.8	P532_0280KX401_0020 MF EZ302U	260	260	600	56.00	56/1	2500	2500	5000	1.9	4.5	2.5	31	14
54	108	115	30	2.1	P532_0280KX401_0020 MF EZ303U	300	300	600	56.00	56/1	2500	2500	5000	2.1	4.5	2.5	31	14
54	147	157	41	1.6	P532_0280KX401_0020 MF EZ401U	300	300	600	56.00	56/1	2500	2500	5000	2.6	4.5	2.5	31	16
60	74	79	18	3.5	P532_0250KX401_0020 MF EZ302U	230	230	710	50.00	50/1	2500	2500	5000	2.0	4.5	2.5	31	14
60	97	102	24	2.7	P532_0250KX401_0020 MF EZ303U	330	330	710	50.00	50/1	2500	2500	5000	2.1	4.5	2.5	31	14
60	131	140	32	2.0	P532_0250KX401_0020 MF EZ401U	360	360	710	50.00	50/1	2500	2500	5000	2.6	4.5	2.5	31	16
60	201	220	50	1.3	P532_0250KX401_0020 MF EZ501U	360	360	710	50.00	50/1	2500	2500	5000	4.6	4.5	2.5	31	17
60	220	243	54	1.2	P532_0250KX401_0020 MF EZ402U	360	360	710	50.00	50/1	2500	2500	5000	3.3	4.5	2.5	31	17
75	60	63	15	4.2	P532_0200KX401_0020 MF EZ302U	190	190	710	40.00	40/1	2500	2500	5000	2.0	4.5	2.5	31	14
75	77	82	20	3.2	P532_0200KX401_0020 MF EZ303U	260	260	710	40.00	40/1	2500	2500	5000	2.1	4.5	2.5	31	14
75	105	112	27	2.4	P532_0200KX401_0020 MF EZ401U	320	320	710	40.00	40/1	2500	2500	5000	2.6	4.5	2.5	31	16
75	161	176	41	1.6	P532_0200KX401_0020 MF EZ501U	360	360	710	40.00	40/1	2500	2500	5000	4.6	4.5	2.5	31	17
75	176	195	45	1.4	P532_0200KX401_0020 MF EZ402U	360	360	710	40.00	40/1	2500	2500	5000	3.3	4.5	2.5	31	17
86	68	72	28	3.9	P532_0350KX401_0010 MF EZ303U	230	230	700	35.00	35/1	2500	2000	4000	2.9	4.5	2.5	32	14
86	92	98	37	2.9	P532_0350KX401_0010 MF EZ401U	280	280	700	35.00	35/1	2500	2000	4000	3.4	4.5	2.5	32	16
86	141	154	58	1.9	P532_0350KX401_0010 MF EZ501U	350	350	700	35.00	35/1	2500	2000	4000	5.4	4.5	2.5	32	17
86	154	170	63	1.7	P532_0350KX401_0010 MF EZ402U	350	350	700	35.00	35/1	2500	2000	4000	4.1	4.5	2.5	32	17
86	242	262	99	1.1	P532_0350KX401_0010 MF EZ502U	350	350	700	35.00	35/1	2500	2000	4000	7.7	4.5	2.5	32	18
94	48	50	14	4.6	P532_0160KX401_0020 MF EZ302U	150	150	600	32.00	32/1	2500	2500	5000	2.0	4.5	2.5	29	14
94	62	66	18	3.5	P532_0160KX401_0020 MF EZ303U	210	210	600	32.00	32/1	2500	2500	5000	2.1	4.5	2.5	29	14
94	84	90	24	2.6	P532_0160KX401_0020 MF EZ401U	250	250	600	32.00	32/1	2500	2500	5000	2.6	4.5	2.5	29	16
94	129	141	38	1.7	P532_0160KX401_0020 MF EZ501U	300	300	600	32.00	32/1	2500	2500	5000	4.6	4.5	2.5	29	17
94	141	156	41	1.6	P532_0160KX401_0020 MF EZ402U	300	300	600	32.00	32/1	2500	2500	5000	3.3	4.5	2.5	29	17
P731KX (n_{1N} = 2000 rpm, $M_{2acc,max}$ = 810 Nm)																		
286	292	442	239	1.5	P731_0070KX701_0010 MF EZ805U	810	840	1590	7.000	7/1	1800	1600	3000	159	4.5	2.5	54	72
400	209	316	171	2.1	P731_0050KX701_0010 MF EZ805U	610	610	1130	5.000	5/1	1800	1600	3000	160	5.0	3.0	52	72
500	167	253	155	2.3	P731_0040KX701_0010 MF EZ805U	490	490	910	4.000	4/1	1800	1600	3000	162	5.5	3.5	47	72
667	125	189	161	2.2	P731_0030KX701_0010 MF EZ805U	360	360	680	3.000	3/1	1800	1600	3000	167	6.5	4.5	38	72
P731KX (n_{1N} = 3000 rpm, $M_{2acc,max}$ = 810 Nm)																		
100	123	135	56	2.8	P731_0100KX701_0030 MF EZ501U	460	460	1150	30.00	30/1	2100	2100	4000	15	4.0	2.0	52	32
100	212	229	96	1.7	P731_0100KX701_0030 MF EZ502U	580	580	1150	30.00	30/1	2100	2100	4000	18	4.0	2.0	52	33
100	212	238	96	1.7	P731_0100KX701_0030 MF EZ701U	570	570	1150	30.00	30/1	2100	2100	4000	21	4.0	2.0	52	35
100	278	318	125	1.3	P731_0100KX701_0030 MF EZ503U	580	580	1150	30.00	30/1	2100	2100	4000	20	4.0	2.0	52	35
100	344	413	155	1.0	P731_0100KX701_0030 MF EZ702U	580	580	1150	30.00	30/1	2100	2100	4000	26	4.0	2.0	52	37
125	99	108	39	4.1	P731_0080KX701_0030 MF EZ501U	370	370	1340	24.00	24/1	2100	2100	4000	15	4.5	2.5	53	32
125	170	183	67	2.4	P731_0080KX701_0030 MF EZ502U	670	700	1340	24.00	24/1	2100	2100	4000	18	4.5	2.5	53	33
125	170	190	67	2.4	P731_0080KX701_0030 MF EZ701U	460	460	1340	24.00	24/1	2100	2100	4000	21	4.5	2.5	53	35
125	222	255	88	1.8	P731_0080KX701_0030 MF EZ503U	670	700	1340	24.00	24/1	2100	2100	4000	20	4.5	2.5	53	35
125	275	330	109	1.5	P731_0080KX701_0030 MF EZ702U	670	700	1340	24.00	24/1	2100	2100	4000	26	4.5	2.5	53	37
125	310	367	122	1.3	P731_0080KX701_0030 MF EZ505U	670	700	1340	24.00	24/1	2100	2100	4000	25	4.5	2.5	53	37
125	378	477	149	1.1	P731_0080KX701_0030 MF EZ703U	670	700	1340	24.00	24/1	2100	2100	4000	34	4.5	2.5	53	39
143	148	161	53	3.0	P731_0070KX701_0030 MF EZ502U	620	620	1610	21.00	21/1	2100	2100	4000	18	4.5	2.5	54	33
143	148	167	53	3.0	P731_0070KX701_0030 MF EZ701U	400	400	1610	21.00	21/1	2100	2100	4000	21	4.5	2.5	54	35
143	195	223	70	2.3	P731_0070KX701_0030 MF EZ503U	810	840	1610	21.00	21/1	2100	2100	4000	20	4.5	2.5	54	35
143	241	289	86	1.8	P731_0070KX701_0030 MF EZ702U	810	820	1610	21.00	21/1	2100	2100	4000	26	4.5	2.5	54	37
143	271	321	97	1.6	P731_0070KX701_0030 MF EZ505U	810	840	1610	21.00	21/1	2100	2100	4000	25	4.5	2.5	54	37
143	331	417	119	1.3	P731_0070KX701_0030 MF EZ703U	810	840	1610	21.00	21/1	2100	2100	4000	34	4.5	2.5	54	39
143	427	606	153	1.0	P731_0070KX701_0030 MF EZ705U	810	840	1610	21.00	21/1	2100	2100	4000	47	4.5	2.5	54	45
150	82	90	50	4.3	P731_0100KX701_0020 MF EZ501U	310	310	1150	20.00	20/1	1800	1800	3500	18	4.0	2.0	52	32
150	141	153	86	2.5	P731_0100KX701_0020 MF EZ502U	580	580	1150	20.00	20/1	1800	1800	3500	20	4.0	2.0	52	33
150	141	159	86	2.5	P731_0100KX701_0020 MF EZ701U	380	380	1150	20.00	20/1	1800	1800	3500	23	4.0	2.0	52	35
150	185	212	113	1.9	P731_0100KX701_0020 MF EZ503U	580	580	1150	20.00	20/1	1800	1800	3500	22	4.0	2.0	52	35
150	229	275	140	1.5	P731_0100KX701_0020 MF EZ702U	580	580	1150	20.00	20/1	1800	1800	3500	29	4.0	2.0	52	37
150	258	306	158	1.4	P731_0100KX701_0020 MF EZ505U	580	580	1150	20.00	20/1	1800	1800	3500	27	4.0	2.0	52	37
150	315	397	193	1.1	P731_0100KX701_0020 MF EZ703U	580	580	1150	20.00	20/1	1800	1800	3500	36	4.0	2.0	52	39
188	113	122	61	3.5	P731_0080KX701_0020 MF EZ502U	470	470	1340	16.00	16/1	1800	1800	3500	20	4.5	2.5	53	33
188	113	127	61	3.5	P731_0080KX701_0020 MF EZ701U	310	310	1340	16.00	16/1	1800	1800	3500	23	4.5	2.5	53	35
188	148	170	79	2.7	P731_0080KX701_0020 MF EZ503U	660	660	1340	16.00	16/1	1800	1800	3500	23	4.5	2.5	53	35
188	183	220	98	2.2	P731_0080KX701_0020 MF EZ702U	630	630	1340	16.00	16/1	1800	1800	3500	29	4.5	2.5	53	37
188	206	245	110	1.9	P731_0080KX701_0020 MF EZ505U	670	700	1340	16.00	16/1	1800	1800	3500	27	4.5	2.5	53	37
188	252	318	135	1.6	P731_0080KX701_0020 MF EZ703U	670	700	1340	16.00	16/1	1800	1800	3500	37	4.5	2.5	53	39

n_{2N} [rpm]	M_{2N} [Nm]	$M_{2,0}$ [Nm]	a_{th}	S	Type	M_{2acc} [Nm]	M_{2accHT} [Nm]	M_{2NOT} [Nm]	i	i_{exakt}	n_{1maxDB} EL1,2,5,6 [rpm]	n_{1maxDB} EL3,4 [rpm]	n_{1maxZB} [rpm]	J_1 [kgcm²]	$\Delta\varphi_2$ [arcmin]	$\Delta\varphi_{2red}$ [arcmin]	C_2 [Nm/ arcmin]	m [kg]
P731KX (n_{1N} = 3000 rpm, $M_{2acc,max}$ = 810 Nm)																		
188	326	462	174	1.2	P731_0080KX701_0020 MF EZ705U	670	700	1340	16.00	16/1	1800	1800	3500	49	4.5	2.5	53	45
200	106	115	40	4.0	P731_0050KX701_0030 MF EZ502U	440	440	1290	15.00	15/1	2100	2100	4000	18	5.0	3.0	52	33
200	106	119	40	4.0	P731_0050KX701_0030 MF EZ701U	290	290	1290	15.00	15/1	2100	2100	4000	21	5.0	3.0	52	35
200	139	159	52	3.0	P731_0050KX701_0030 MF EZ503U	610	610	1290	15.00	15/1	2100	2100	4000	20	5.0	3.0	52	35
200	172	206	64	2.5	P731_0050KX701_0030 MF EZ702U	590	590	1290	15.00	15/1	2100	2100	4000	26	5.0	3.0	52	37
200	193	229	72	2.2	P731_0050KX701_0030 MF EZ505U	610	610	1290	15.00	15/1	2100	2100	4000	25	5.0	3.0	52	37
200	236	298	88	1.8	P731_0050KX701_0030 MF EZ703U	610	610	1290	15.00	15/1	2100	2100	4000	34	5.0	3.0	52	39
200	305	433	114	1.4	P731_0050KX701_0030 MF EZ705U	610	610	1290	15.00	15/1	2100	2100	4000	47	5.0	3.0	52	45
214	99	107	48	4.4	P731_0070KX701_0020 MF EZ502U	410	410	1610	14.00	14/1	1800	1800	3500	20	4.5	2.5	54	33
214	99	111	48	4.4	P731_0070KX701_0020 MF EZ701U	270	270	1610	14.00	14/1	1800	1800	3500	24	4.5	2.5	54	35
214	130	148	63	3.4	P731_0070KX701_0020 MF EZ503U	580	580	1610	14.00	14/1	1800	1800	3500	23	4.5	2.5	54	35
214	161	193	78	2.7	P731_0070KX701_0020 MF EZ702U	550	550	1610	14.00	14/1	1800	1800	3500	29	4.5	2.5	54	37
214	181	214	88	2.4	P731_0070KX701_0020 MF EZ505U	810	840	1610	14.00	14/1	1800	1800	3500	27	4.5	2.5	54	37
214	221	278	107	2.0	P731_0070KX701_0020 MF EZ703U	810	840	1610	14.00	14/1	1800	1800	3500	37	4.5	2.5	54	39
214	285	404	139	1.5	P731_0070KX701_0020 MF EZ705U	810	840	1610	14.00	14/1	1800	1800	3500	49	4.5	2.5	54	45
214	298	496	145	1.5	P731_0070KX701_0020 MF EZ802U	810	840	1610	14.00	14/1	1800	1800	3500	73	4.5	2.5	54	53
250	85	92	40	4.0	P731_0040KX701_0030 MF EZ502U	360	360	1030	12.00	12/1	2100	2100	4000	18	5.5	3.5	47	33
250	85	95	40	4.0	P731_0040KX701_0030 MF EZ701U	230	230	1030	12.00	12/1	2100	2100	4000	21	5.5	3.5	47	35
250	111	127	52	3.0	P731_0040KX701_0030 MF EZ503U	490	490	1030	12.00	12/1	2100	2100	4000	20	5.5	3.5	47	35
250	138	165	64	2.5	P731_0040KX701_0030 MF EZ702U	470	470	1030	12.00	12/1	2100	2100	4000	27	5.5	3.5	47	37
250	155	183	72	2.2	P731_0040KX701_0030 MF EZ505U	490	490	1030	12.00	12/1	2100	2100	4000	25	5.5	3.5	47	37
250	189	238	88	1.8	P731_0040KX701_0030 MF EZ703U	490	490	1030	12.00	12/1	2100	2100	4000	34	5.5	3.5	47	39
250	244	346	114	1.4	P731_0040KX701_0030 MF EZ705U	490	490	1030	12.00	12/1	2100	2100	4000	47	5.5	3.5	47	45
300	93	106	47	4.6	P731_0050KX701_0020 MF EZ503U	410	410	1290	10.00	10/1	1800	1800	3500	23	5.0	3.0	52	35
300	115	138	58	3.7	P731_0050KX701_0020 MF EZ702U	390	390	1290	10.00	10/1	1800	1800	3500	29	5.0	3.0	52	37
300	129	153	65	3.3	P731_0050KX701_0020 MF EZ505U	610	610	1290	10.00	10/1	1800	1800	3500	27	5.0	3.0	52	37
300	158	199	80	2.7	P731_0050KX701_0020 MF EZ703U	610	610	1290	10.00	10/1	1800	1800	3500	37	5.0	3.0	52	39
300	204	289	103	2.1	P731_0050KX701_0020 MF EZ705U	610	610	1290	10.00	10/1	1800	1800	3500	49	5.0	3.0	52	45
300	213	354	108	2.0	P731_0050KX701_0020 MF EZ802U	610	610	1290	10.00	10/1	1800	1800	3500	73	5.0	3.0	52	53
300	254	461	128	1.7	P731_0050KX701_0020 MF EZ803U	610	610	1290	10.00	10/1	1800	1800	3500	99	5.0	3.0	52	59
375	74	85	47	4.6	P731_0040KX701_0020 MF EZ503U	330	330	1030	8.000	8/1	1800	1800	3500	23	5.5	3.5	47	35
375	92	110	58	3.7	P731_0040KX701_0020 MF EZ702U	310	310	1030	8.000	8/1	1800	1800	3500	29	5.5	3.5	47	37
375	103	122	65	3.3	P731_0040KX701_0020 MF EZ505U	490	490	1030	8.000	8/1	1800	1800	3500	28	5.5	3.5	47	37
375	126	159	80	2.7	P731_0040KX701_0020 MF EZ703U	490	490	1030	8.000	8/1	1800	1800	3500	37	5.5	3.5	47	39
375	163	231	103	2.1	P731_0040KX701_0020 MF EZ705U	490	490	1030	8.000	8/1	1800	1800	3500	50	5.5	3.5	47	45
375	170	284	108	2.0	P731_0040KX701_0020 MF EZ802U	490	490	1030	8.000	8/1	1800	1800	3500	74	5.5	3.5	47	53
375	203	368	128	1.7	P731_0040KX701_0020 MF EZ803U	490	490	1030	8.000	8/1	1800	1800	3500	99	5.5	3.5	47	59
429	80	96	75	4.8	P731_0070KX701_0010 MF EZ702U	270	270	1590	7.000	7/1	1800	1600	3000	40	4.5	2.5	54	37
429	90	107	85	4.3	P731_0070KX701_0010 MF EZ505U	450	450	1590	7.000	7/1	1800	1600	3000	38	4.5	2.5	54	37
429	110	139	103	3.5	P731_0070KX701_0010 MF EZ703U	430	430	1590	7.000	7/1	1800	1600	3000	48	4.5	2.5	54	39
429	142	202	133	2.7	P731_0070KX701_0010 MF EZ705U	700	700	1590	7.000	7/1	1800	1600	3000	60	4.5	2.5	54	45
429	149	248	140	2.6	P731_0070KX701_0010 MF EZ802U	670	670	1590	7.000	7/1	1800	1600	3000	84	4.5	2.5	54	53
429	178	322	167	2.2	P731_0070KX701_0010 MF EZ803U	810	840	1590	7.000	7/1	1800	1600	3000	110	4.5	2.5	54	59
500	56	64	47	4.6	P731_0030KX701_0020 MF EZ503U	250	250	770	6.000	6/1	1800	1800	3500	25	6.5	4.5	38	35
500	69	83	58	3.7	P731_0030KX701_0020 MF EZ702U	240	240	770	6.000	6/1	1800	1800	3500	31	6.5	4.5	38	37
500	77	92	65	3.3	P731_0030KX701_0020 MF EZ505U	360	360	770	6.000	6/1	1800	1800	3500	29	6.5	4.5	38	37
500	95	119	80	2.7	P731_0030KX701_0020 MF EZ703U	360	360	770	6.000	6/1	1800	1800	3500	39	6.5	4.5	38	39
500	122	173	103	2.1	P731_0030KX701_0020 MF EZ705U	360	360	770	6.000	6/1	1800	1800	3500	51	6.5	4.5	38	45
500	128	213	108	2.0	P731_0030KX701_0020 MF EZ802U	360	360	770	6.000	6/1	1800	1800	3500	75	6.5	4.5	38	53
500	152	276	128	1.7	P731_0030KX701_0020 MF EZ803U	360	360	770	6.000	6/1	1800	1800	3500	100	6.5	4.5	38	59
600	79	99	74	4.9	P731_0050KX701_0010 MF EZ703U	310	310	1130	5.000	5/1	1800	1600	3000	49	5.0	3.0	52	39
600	102	144	95	3.8	P731_0050KX701_0010 MF EZ705U	500	500	1130	5.000	5/1	1800	1600	3000	61	5.0	3.0	52	45
600	107	177	100	3.6	P731_0050KX701_0010 MF EZ802U	480	480	1130	5.000	5/1	1800	1600	3000	85	5.0	3.0	52	53
600	127	230	119	3.0	P731_0050KX701_0010 MF EZ803U	610	610	1130	5.000	5/1	1800	1600	3000	111	5.0	3.0	52	59
750	81	115	86	4.2	P731_0040KX701_0010 MF EZ705U	400	400	910	4.000	4/1	1800	1600	3000	63	5.5	3.5	47	45
750	85	142	91	4.0	P731_0040KX701_0010 MF EZ802U	380	380	910	4.000	4/1	1800	1600	3000	87	5.5	3.5	47	53
750	102	184	108	3.3	P731_0040KX701_0010 MF EZ803U	490	490	910	4.000	4/1	1800	1600	3000	112	5.5	3.5	47	59
1000	61	87	90	4.0	P731_0030KX701_0010 MF EZ705U	300	300	680	3.000	3/1	1800	1600	3000	68	6.5	4.5	38	45
1000	64	106	94	3.8	P731_0030KX701_0010 MF EZ802U	290	290	680	3.000	3/1	1800	1600	3000	92	6.5	4.5	38	53
1000	76	138	112	3.2	P731_0030KX701_0010 MF EZ803U	360	360	680	3.000	3/1	1800	1600	3000	117	6.5	4.5	38	59
P732KX (n_{1N} = 3000 rpm, $M_{2acc,max}$ = 810 Nm)																		
20	393	421	37	1.4	P732_0500KX501_0030 MF EZ401U	770	810	1540	150.0	150/1	3000	3000	5000	5.7	4.0	2.0	62	26
21	367	393	45	1.6	P732_0700KX501_0020 MF EZ401U	760	800	1520	140.0	140/1	2500	2500	4500	6.2	4.0	2.0	59	26
25	314	337	36	1.4	P732_0400KX501_0030 MF EZ401U	700	700	1400	120.0	120/1	3000	3000	5000	5.7	4.5	2.5	62	26

n_{2N} [rpm]	M_{2N} [Nm]	$M_{2,0}$ [Nm]	a_{th}	S	Type	M_{2acc} [Nm]	M_{2accHT} [Nm]	M_{2NOT} [Nm]	i	i_{exakt}	n_{1maxDB} EL1,2,5,6 [rpm]	n_{1maxDB} EL3,4 [rpm]	n_{1maxZB} [rpm]	J_1 [kgcm²]	$\Delta\varphi_2$ [arcmin]	$\Delta\varphi_{2red}$ [arcmin]	C_2 [Nm/ arcmin]	m [kg]
P732KX (n_{1N} = 3000 rpm, $M_{2acc,max}$ = 810 Nm)																		
29	275	295	27	2.0	P732_0350KX501_0030 MF EZ401U	770	810	1540	105.0	105/1	3000	3000	5000	5.8	4.5	2.5	62	26
29	422	462	41	1.3	P732_0350KX501_0030 MF EZ501U	770	810	1540	105.0	105/1	3000	3000	5000	7.7	4.5	2.5	62	27
29	462	511	45	1.2	P732_0350KX501_0030 MF EZ402U	770	810	1540	105.0	105/1	3000	3000	5000	6.5	4.5	2.5	62	27
30	262	281	33	2.2	P732_0500KX501_0020 MF EZ401U	770	800	1540	100.0	100/1	2500	2500	4500	6.2	4.0	2.0	62	26
30	402	440	51	1.4	P732_0500KX501_0020 MF EZ501U	770	810	1540	100.0	100/1	2500	2500	4500	8.2	4.0	2.0	62	27
30	440	487	56	1.3	P732_0500KX501_0020 MF EZ402U	770	810	1540	100.0	100/1	2500	2500	4500	6.9	4.0	2.0	62	27
36	220	236	22	2.4	P732_0280KX501_0030 MF EZ401U	670	670	1400	84.00	84/1	3000	3000	5000	5.8	4.5	2.5	62	26
36	338	369	33	1.6	P732_0280KX501_0030 MF EZ501U	700	700	1400	84.00	84/1	3000	3000	5000	7.7	4.5	2.5	62	27
36	369	409	36	1.5	P732_0280KX501_0030 MF EZ402U	700	700	1400	84.00	84/1	3000	3000	5000	6.5	4.5	2.5	62	27
38	210	225	33	2.2	P732_0400KX501_0020 MF EZ401U	640	640	1400	80.00	80/1	2500	2500	4500	6.2	4.5	2.5	62	26
38	322	352	51	1.4	P732_0400KX501_0020 MF EZ501U	700	700	1400	80.00	80/1	2500	2500	4500	8.2	4.5	2.5	62	27
38	352	389	55	1.3	P732_0400KX501_0020 MF EZ402U	700	700	1400	80.00	80/1	2500	2500	4500	6.9	4.5	2.5	62	27
40	197	211	21	2.5	P732_0250KX501_0030 MF EZ401U	600	600	1610	75.00	75/1	3000	3000	5000	5.8	4.5	2.5	62	26
40	302	330	32	1.7	P732_0250KX501_0030 MF EZ501U	810	810	1610	75.00	75/1	3000	3000	5000	7.8	4.5	2.5	62	27
40	330	365	35	1.5	P732_0250KX501_0030 MF EZ402U	810	810	1610	75.00	75/1	3000	3000	5000	6.5	4.5	2.5	62	27
40	484	604	51	1.0	P732_0250KX501_0030 MF EZ404U	810	810	1610	75.00	75/1	3000	3000	5000	7.8	4.5	2.5	62	29
43	183	197	24	2.9	P732_0350KX501_0020 MF EZ401U	560	560	1540	70.00	70/1	2500	2500	4500	6.3	4.5	2.5	62	26
43	282	308	37	1.9	P732_0350KX501_0020 MF EZ501U	770	810	1540	70.00	70/1	2500	2500	4500	8.3	4.5	2.5	62	27
43	308	341	41	1.8	P732_0350KX501_0020 MF EZ402U	770	810	1540	70.00	70/1	2500	2500	4500	7.0	4.5	2.5	62	27
43	452	563	60	1.2	P732_0350KX501_0020 MF EZ404U	770	810	1540	70.00	70/1	2500	2500	4500	8.4	4.5	2.5	62	29
43	485	524	64	1.1	P732_0350KX501_0020 MF EZ502U	770	810	1540	70.00	70/1	2500	2500	4500	11	4.5	2.5	62	29
43	485	544	64	1.1	P732_0350KX501_0020 MF EZ701U	770	810	1540	70.00	70/1	2500	2500	4500	14	4.5	2.5	62	31
47	168	180	25	2.8	P732_0320KX501_0020 MF EZ401U	510	510	1460	64.00	64/1	2500	2500	4500	6.5	4.5	2.5	56	26
47	258	281	39	1.8	P732_0320KX501_0020 MF EZ501U	730	730	1460	64.00	64/1	2500	2500	4500	8.4	4.5	2.5	56	27
47	281	311	43	1.7	P732_0320KX501_0020 MF EZ402U	730	730	1460	64.00	64/1	2500	2500	4500	7.2	4.5	2.5	56	27
47	413	515	63	1.1	P732_0320KX501_0020 MF EZ404U	730	730	1460	64.00	64/1	2500	2500	4500	8.5	4.5	2.5	56	29
47	443	479	67	1.1	P732_0320KX501_0020 MF EZ502U	730	730	1460	64.00	64/1	2500	2500	4500	11	4.5	2.5	56	29
47	443	497	67	1.1	P732_0320KX501_0020 MF EZ701U	730	730	1460	64.00	64/1	2500	2500	4500	14	4.5	2.5	56	31
50	157	168	18	2.9	P732_0200KX501_0030 MF EZ401U	480	480	1610	60.00	60/1	3000	3000	5000	5.8	4.5	2.5	60	26
50	241	264	28	1.9	P732_0200KX501_0030 MF EZ501U	810	810	1610	60.00	60/1	3000	3000	5000	7.8	4.5	2.5	60	27
50	264	292	30	1.7	P732_0200KX501_0030 MF EZ402U	810	810	1610	60.00	60/1	3000	3000	5000	6.5	4.5	2.5	60	27
50	387	483	44	1.2	P732_0200KX501_0030 MF EZ404U	810	810	1610	60.00	60/1	3000	3000	5000	7.9	4.5	2.5	60	29
50	415	449	48	1.1	P732_0200KX501_0030 MF EZ502U	810	810	1610	60.00	60/1	3000	3000	5000	10	4.5	2.5	60	29
50	415	466	48	1.1	P732_0200KX501_0030 MF EZ701U	810	810	1610	60.00	60/1	3000	3000	5000	13	4.5	2.5	60	31
54	147	157	19	3.7	P732_0280KX501_0020 MF EZ401U	450	450	1400	56.00	56/1	2500	2500	4500	6.3	4.5	2.5	62	26
54	225	246	30	2.4	P732_0280KX501_0020 MF EZ501U	700	700	1400	56.00	56/1	2500	2500	4500	8.3	4.5	2.5	62	27
54	246	272	33	2.2	P732_0280KX501_0020 MF EZ402U	700	700	1400	56.00	56/1	2500	2500	4500	7.0	4.5	2.5	62	27
54	362	451	48	1.5	P732_0280KX501_0020 MF EZ404U	700	700	1400	56.00	56/1	2500	2500	4500	8.4	4.5	2.5	62	29
54	388	419	51	1.4	P732_0280KX501_0020 MF EZ502U	700	700	1400	56.00	56/1	2500	2500	4500	11	4.5	2.5	62	29
54	388	435	51	1.4	P732_0280KX501_0020 MF EZ701U	700	700	1400	56.00	56/1	2500	2500	4500	14	4.5	2.5	62	31
60	131	140	19	3.8	P732_0250KX501_0020 MF EZ401U	400	400	1610	50.00	50/1	2500	2500	4500	6.4	4.5	2.5	62	26
60	201	220	29	2.5	P732_0250KX501_0020 MF EZ501U	750	750	1610	50.00	50/1	2500	2500	4500	8.4	4.5	2.5	62	27
60	220	243	31	2.3	P732_0250KX501_0020 MF EZ402U	750	750	1610	50.00	50/1	2500	2500	4500	7.1	4.5	2.5	62	27
60	323	402	46	1.5	P732_0250KX501_0020 MF EZ404U	810	810	1610	50.00	50/1	2500	2500	4500	8.4	4.5	2.5	62	29
60	346	374	49	1.4	P732_0250KX501_0020 MF EZ502U	810	810	1610	50.00	50/1	2500	2500	4500	11	4.5	2.5	62	29
60	346	388	49	1.4	P732_0250KX501_0020 MF EZ701U	810	810	1610	50.00	50/1	2500	2500	4500	14	4.5	2.5	62	31
60	454	519	65	1.1	P732_0250KX501_0020 MF EZ503U	810	810	1610	50.00	50/1	2500	2500	4500	13	4.5	2.5	62	30
75	105	112	16	4.4	P732_0200KX501_0020 MF EZ401U	320	320	1610	40.00	40/1	2500	2500	4500	6.5	4.5	2.5	60	26
75	161	176	25	2.9	P732_0200KX501_0020 MF EZ501U	600	600	1610	40.00	40/1	2500	2500	4500	8.4	4.5	2.5	60	27
75	176	195	27	2.6	P732_0200KX501_0020 MF EZ402U	600	600	1610	40.00	40/1	2500	2500	4500	7.2	4.5	2.5	60	27
75	258	322	40	1.8	P732_0200KX501_0020 MF EZ404U	810	810	1610	40.00	40/1	2500	2500	4500	8.5	4.5	2.5	60	29
75	277	299	43	1.7	P732_0200KX501_0020 MF EZ502U	810	810	1610	40.00	40/1	2500	2500	4500	11	4.5	2.5	60	29
75	277	311	43	1.7	P732_0200KX501_0020 MF EZ701U	750	750	1610	40.00	40/1	2500	2500	4500	14	4.5	2.5	60	31
75	363	415	56	1.3	P732_0200KX501_0020 MF EZ503U	810	810	1610	40.00	40/1	2500	2500	4500	13	4.5	2.5	60	30
75	449	539	70	1.0	P732_0200KX501_0020 MF EZ702U	810	810	1610	40.00	40/1	2500	2500	4500	19	4.5	2.5	60	33
86	141	154	31	3.8	P732_0350KX501_0010 MF EZ501U	520	520	1540	35.00	35/1	2500	2000	3500	11	4.5	2.5	62	27
86	154	170	34	3.5	P732_0350KX501_0010 MF EZ402U	520	520	1540	35.00	35/1	2500	2000	3500	9.5	4.5	2.5	62	27
86	226	282	50	2.4	P732_0350KX501_0010 MF EZ404U	770	810	1540	35.00	35/1	2500	2000	3500	11	4.5	2.5	62	29
86	242	262	54	2.2	P732_0350KX501_0010 MF EZ502U	770	810	1540	35.00	35/1	2500	2000	3500	13	4.5	2.5	62	29
86	242	272	54	2.2	P732_0350KX501_0010 MF EZ701U	660	660	1540	35.00	35/1	2500	2000	3500	16	4.5	2.5	62	31
86	318	364	71	1.7	P732_0350KX501_0010 MF EZ503U	770	810	1540	35.00	35/1	2500	2000	3500	15	4.5	2.5	62	30
86	393	472	87	1.4	P732_0350KX501_0010 MF EZ702U	770	810	1540	35.00	35/1	2500	2000	3500	22	4.5	2.5	62	33
86	442	524	98	1.2	P732_0350KX501_0010 MF EZ505U	770	810	1540	35.00	35/1	2500	2000	3500	20	4.5	2.5	62	33
94	129	141	20	3.5	P732_0160KX501_0020 MF EZ501U	480	480	1400	32.00	32/1	2500	2500	4500	8.5	4.5	2.5	59	27

n_{2N} [rpm]	M_{2N} [Nm]	$M_{2,0}$ [Nm]	a_{th}	S	Type	M_{2acc} [Nm]	M_{2accHT} [Nm]	M_{2NOT} [Nm]	i	i_{exakt}	n_{1maxDB} EL1,2,5,6 [rpm]	n_{1maxDB} EL3,4 [rpm]	n_{1maxZB} [rpm]	J_1 [kgcm²]	$\Delta\varphi_2$ [arcmin]	$\Delta\varphi_{2red}$ [arcmin]	C_2 [Nm/ arcmin]	m [kg]
P732KX (n_{1N} = 3000 rpm, $M_{2acc,max}$ = 810 Nm)																		
94	141	156	22	3.2	P732_0160KX501_0020 MF EZ402U	480	480	1400	32.00	32/1	2500	2500	4500	7.2	4.5	2.5	59	27
94	207	258	33	2.2	P732_0160KX501_0020 MF EZ404U	700	700	1400	32.00	32/1	2500	2500	4500	8.6	4.5	2.5	59	29
94	222	240	35	2.0	P732_0160KX501_0020 MF EZ502U	700	700	1400	32.00	32/1	2500	2500	4500	11	4.5	2.5	59	29
94	222	249	35	2.0	P732_0160KX501_0020 MF EZ701U	600	600	1400	32.00	32/1	2500	2500	4500	14	4.5	2.5	59	31
94	290	332	46	1.5	P732_0160KX501_0020 MF EZ503U	700	700	1400	32.00	32/1	2500	2500	4500	13	4.5	2.5	59	30
94	359	431	57	1.3	P732_0160KX501_0020 MF EZ702U	700	700	1400	32.00	32/1	2500	2500	4500	19	4.5	2.5	59	33
94	404	479	64	1.1	P732_0160KX501_0020 MF EZ505U	700	700	1400	32.00	32/1	2500	2500	4500	18	4.5	2.5	59	33
P732KX (n_{1N} = 4500 rpm, $M_{2acc,max}$ = 810 Nm)																		
113	356	573	55	1.3	P732_0200KX501_0020 MF EZ505U	810	810	1610	40.00	40/1	2500	2500	4500	18	4.5	2.5	60	33
141	284	458	45	1.6	P732_0160KX501_0020 MF EZ505U	700	700	1400	32.00	32/1	2500	2500	4500	18	4.5	2.5	59	33
P831KX (n_{1N} = 2000 rpm, $M_{2acc,max}$ = 850 Nm)																		
286	292	442	155	2.3	P831_0070KX701_0010 MF EZ805U	850	850	1590	7.000	7/1	1800	1600	3000	163	4.5	2.5	125	88
400	209	316	155	2.3	P831_0050KX701_0010 MF EZ805U	610	610	1130	5.000	5/1	1800	1600	3000	168	5.0	3.0	104	88
500	167	253	155	2.3	P831_0040KX701_0010 MF EZ805U	490	490	910	4.000	4/1	1800	1600	3000	176	5.5	3.5	84	88
667	125	189	155	2.3	P831_0030KX701_0010 MF EZ805U	360	360	680	3.000	3/1	1800	1600	3000	199	6.5	4.5	59	88
P831KX (n_{1N} = 3000 rpm, $M_{2acc,max}$ = 1210 Nm)																		
100	212	229	40	4.0	P831_0100KX701_0030 MF EZ502U	890	890	2580	30.00	30/1	2100	2100	4000	18	4.0	2.0	130	49
100	212	238	40	4.0	P831_0100KX701_0030 MF EZ701U	570	570	2580	30.00	30/1	2100	2100	4000	21	4.0	2.0	130	50
100	278	318	52	3.0	P831_0100KX701_0030 MF EZ503U	1210	1210	2580	30.00	30/1	2100	2100	4000	20	4.0	2.0	130	50
100	344	413	64	2.5	P831_0100KX701_0030 MF EZ702U	1180	1180	2580	30.00	30/1	2100	2100	4000	26	4.0	2.0	130	53
100	387	459	72	2.2	P831_0100KX701_0030 MF EZ505U	1210	1210	2580	30.00	30/1	2100	2100	4000	25	4.0	2.0	130	53
100	473	596	88	1.8	P831_0100KX701_0030 MF EZ703U	1210	1210	2580	30.00	30/1	2100	2100	4000	34	4.0	2.0	130	55
100	611	866	114	1.4	P831_0100KX701_0030 MF EZ705U	1210	1210	2580	30.00	30/1	2100	2100	4000	47	4.0	2.0	130	60
125	170	183	40	4.0	P831_0080KX701_0030 MF EZ502U	710	710	2060	24.00	24/1	2100	2100	4000	18	4.5	2.5	128	49
125	170	190	40	4.0	P831_0080KX701_0030 MF EZ701U	460	460	2060	24.00	24/1	2100	2100	4000	21	4.5	2.5	128	50
125	222	255	52	3.0	P831_0080KX701_0030 MF EZ503U	970	970	2060	24.00	24/1	2100	2100	4000	20	4.5	2.5	128	50
125	275	330	64	2.5	P831_0080KX701_0030 MF EZ702U	940	940	2060	24.00	24/1	2100	2100	4000	27	4.5	2.5	128	53
125	310	367	72	2.2	P831_0080KX701_0030 MF EZ505U	970	970	2060	24.00	24/1	2100	2100	4000	25	4.5	2.5	128	53
125	378	477	88	1.8	P831_0080KX701_0030 MF EZ703U	970	970	2060	24.00	24/1	2100	2100	4000	35	4.5	2.5	128	55
125	488	693	114	1.4	P831_0080KX701_0030 MF EZ705U	970	970	2060	24.00	24/1	2100	2100	4000	47	4.5	2.5	128	60
143	148	161	40	4.0	P831_0070KX701_0030 MF EZ502U	620	620	1800	21.00	21/1	2100	2100	4000	18	4.5	2.5	125	49
143	148	167	40	4.0	P831_0070KX701_0030 MF EZ701U	400	400	1800	21.00	21/1	2100	2100	4000	22	4.5	2.5	125	50
143	195	223	52	3.0	P831_0070KX701_0030 MF EZ503U	850	850	1800	21.00	21/1	2100	2100	4000	21	4.5	2.5	125	50
143	241	289	64	2.5	P831_0070KX701_0030 MF EZ702U	820	820	1800	21.00	21/1	2100	2100	4000	27	4.5	2.5	125	53
143	271	321	72	2.2	P831_0070KX701_0030 MF EZ505U	850	850	1800	21.00	21/1	2100	2100	4000	25	4.5	2.5	125	53
143	331	417	88	1.8	P831_0070KX701_0030 MF EZ703U	850	850	1800	21.00	21/1	2100	2100	4000	35	4.5	2.5	125	55
143	427	606	114	1.4	P831_0070KX701_0030 MF EZ705U	850	850	1800	21.00	21/1	2100	2100	4000	47	4.5	2.5	125	60
150	185	212	47	4.6	P831_0100KX701_0020 MF EZ503U	820	820	2580	20.00	20/1	1800	1800	3500	23	4.0	2.0	130	50
150	229	275	58	3.7	P831_0100KX701_0020 MF EZ702U	780	780	2580	20.00	20/1	1800	1800	3500	29	4.0	2.0	130	53
150	258	306	65	3.3	P831_0100KX701_0020 MF EZ505U	1210	1210	2580	20.00	20/1	1800	1800	3500	28	4.0	2.0	130	53
150	315	397	80	2.7	P831_0100KX701_0020 MF EZ703U	1210	1210	2580	20.00	20/1	1800	1800	3500	37	4.0	2.0	130	55
150	407	577	103	2.1	P831_0100KX701_0020 MF EZ705U	1210	1210	2580	20.00	20/1	1800	1800	3500	49	4.0	2.0	130	60
150	426	709	108	2.0	P831_0100KX701_0020 MF EZ802U	1210	1210	2580	20.00	20/1	1800	1800	3500	73	4.0	2.0	130	69
150	508	921	128	1.7	P831_0100KX701_0020 MF EZ803U	1210	1210	2580	20.00	20/1	1800	1800	3500	99	4.0	2.0	130	75
188	148	170	47	4.6	P831_0080KX701_0020 MF EZ503U	660	660	2060	16.00	16/1	1800	1800	3500	23	4.5	2.5	128	50
188	183	220	58	3.7	P831_0080KX701_0020 MF EZ702U	630	630	2060	16.00	16/1	1800	1800	3500	29	4.5	2.5	128	53
188	206	245	65	3.3	P831_0080KX701_0020 MF EZ505U	970	970	2060	16.00	16/1	1800	1800	3500	28	4.5	2.5	128	53
188	252	318	80	2.7	P831_0080KX701_0020 MF EZ703U	970	970	2060	16.00	16/1	1800	1800	3500	37	4.5	2.5	128	55
188	326	462	103	2.1	P831_0080KX701_0020 MF EZ705U	970	970	2060	16.00	16/1	1800	1800	3500	50	4.5	2.5	128	60
188	341	567	108	2.0	P831_0080KX701_0020 MF EZ802U	970	970	2060	16.00	16/1	1800	1800	3500	74	4.5	2.5	128	69
188	407	737	128	1.7	P831_0080KX701_0020 MF EZ803U	970	970	2060	16.00	16/1	1800	1800	3500	99	4.5	2.5	128	75
200	106	115	40	4.0	P831_0050KX701_0030 MF EZ502U	440	440	1290	15.00	15/1	2100	2100	4000	19	5.0	3.0	104	49
200	106	119	40	4.0	P831_0050KX701_0030 MF EZ701U	290	290	1290	15.00	15/1	2100	2100	4000	22	5.0	3.0	104	50
200	139	159	52	3.0	P831_0050KX701_0030 MF EZ503U	610	610	1290	15.00	15/1	2100	2100	4000	21	5.0	3.0	104	50
200	172	206	64	2.5	P831_0050KX701_0030 MF EZ702U	590	590	1290	15.00	15/1	2100	2100	4000	27	5.0	3.0	104	53
200	193	229	72	2.2	P831_0050KX701_0030 MF EZ505U	610	610	1290	15.00	15/1	2100	2100	4000	26	5.0	3.0	104	53
200	236	298	88	1.8	P831_0050KX701_0030 MF EZ703U	610	610	1290	15.00	15/1	2100	2100	4000	35	5.0	3.0	104	55
200	305	433	114	1.4	P831_0050KX701_0030 MF EZ705U	610	610	1290	15.00	15/1	2100	2100	4000	48	5.0	3.0	104	60
214	130	148	47	4.6	P831_0070KX701_0020 MF EZ503U	580	580	1800	14.00	14/1	1800	1800	3500	24	4.5	2.5	125	50
214	161	193	58	3.7	P831_0070KX701_0020 MF EZ702U	550	550	1800	14.00	14/1	1800	1800	3500	30	4.5	2.5	125	53
214	181	214	65	3.3	P831_0070KX701_0020 MF EZ505U	850	850	1800	14.00	14/1	1800	1800	3500	28	4.5	2.5	125	53
214	221	278	80	2.7	P831_0070KX701_0020 MF EZ703U	850	850	1800	14.00	14/1	1800	1800	3500	38	4.5	2.5	125	55
214	285	404	103	2.1	P831_0070KX701_0020 MF EZ705U	850	850	1800	14.00	14/1	1800	1800	3500	50	4.5	2.5	125	60

n_{2N} [rpm]	M_{2N} [Nm]	$M_{2,0}$ [Nm]	a_{th}	S	Type	M_{2acc} [Nm]	M_{2accHT} [Nm]	M_{2NOT} [Nm]	i	i_{exakt}	n_{1maxDB} EL1,2,5,6 [rpm]	n_{1maxDB} EL3,4 [rpm]	n_{1maxZB} [rpm]	J_1 [kgcm²]	$\Delta\varphi_2$ [arcmin]	$\Delta\varphi_{2red}$ [arcmin]	C_2 [Nm/ arcmin]	m [kg]
P831KX (n_{1N} = 3000 rpm, $M_{2acc,max}$ = 1210 Nm)																		
214	298	496	108	2.0	P831_0070KX701_0020 MF EZ802U	850	850	1800	14.00	14/1	1800	1800	3500	74	4.5	2.5	125	69
214	356	645	128	1.7	P831_0070KX701_0020 MF EZ803U	850	850	1800	14.00	14/1	1800	1800	3500	100	4.5	2.5	125	75
250	85	92	40	4.0	P831_0040KX701_0030 MF EZ502U	360	360	1030	12.00	12/1	2100	2100	4000	20	5.5	3.5	84	49
250	85	95	40	4.0	P831_0040KX701_0030 MF EZ701U	230	230	1030	12.00	12/1	2100	2100	4000	23	5.5	3.5	84	50
250	111	127	52	3.0	P831_0040KX701_0030 MF EZ503U	490	490	1030	12.00	12/1	2100	2100	4000	22	5.5	3.5	84	50
250	138	165	64	2.5	P831_0040KX701_0030 MF EZ702U	470	470	1030	12.00	12/1	2100	2100	4000	28	5.5	3.5	84	53
250	155	183	72	2.2	P831_0040KX701_0030 MF EZ505U	490	490	1030	12.00	12/1	2100	2100	4000	27	5.5	3.5	84	53
250	189	238	88	1.8	P831_0040KX701_0030 MF EZ703U	490	490	1030	12.00	12/1	2100	2100	4000	36	5.5	3.5	84	55
250	244	346	114	1.4	P831_0040KX701_0030 MF EZ705U	490	490	1030	12.00	12/1	2100	2100	4000	48	5.5	3.5	84	60
300	93	106	47	4.6	P831_0050KX701_0020 MF EZ503U	410	410	1290	10.00	10/1	1800	1800	3500	25	5.0	3.0	104	50
300	115	138	58	3.7	P831_0050KX701_0020 MF EZ702U	390	390	1290	10.00	10/1	1800	1800	3500	31	5.0	3.0	104	53
300	129	153	65	3.3	P831_0050KX701_0020 MF EZ505U	610	610	1290	10.00	10/1	1800	1800	3500	30	5.0	3.0	104	53
300	158	199	80	2.7	P831_0050KX701_0020 MF EZ703U	610	610	1290	10.00	10/1	1800	1800	3500	39	5.0	3.0	104	55
300	204	289	103	2.1	P831_0050KX701_0020 MF EZ705U	610	610	1290	10.00	10/1	1800	1800	3500	51	5.0	3.0	104	60
300	213	354	108	2.0	P831_0050KX701_0020 MF EZ802U	610	610	1290	10.00	10/1	1800	1800	3500	75	5.0	3.0	104	69
300	254	461	128	1.7	P831_0050KX701_0020 MF EZ803U	610	610	1290	10.00	10/1	1800	1800	3500	101	5.0	3.0	104	75
375	74	85	47	4.6	P831_0040KX701_0020 MF EZ503U	330	330	1030	8.000	8/1	1800	1800	3500	27	5.5	3.5	84	50
375	92	110	58	3.7	P831_0040KX701_0020 MF EZ702U	310	310	1030	8.000	8/1	1800	1800	3500	33	5.5	3.5	84	53
375	103	122	65	3.3	P831_0040KX701_0020 MF EZ505U	490	490	1030	8.000	8/1	1800	1800	3500	31	5.5	3.5	84	53
375	126	159	80	2.7	P831_0040KX701_0020 MF EZ703U	490	490	1030	8.000	8/1	1800	1800	3500	41	5.5	3.5	84	55
375	163	231	103	2.1	P831_0040KX701_0020 MF EZ705U	490	490	1030	8.000	8/1	1800	1800	3500	53	5.5	3.5	84	60
375	170	284	108	2.0	P831_0040KX701_0020 MF EZ802U	490	490	1030	8.000	8/1	1800	1800	3500	77	5.5	3.5	84	69
375	203	368	128	1.7	P831_0040KX701_0020 MF EZ803U	490	490	1030	8.000	8/1	1800	1800	3500	103	5.5	3.5	84	75
429	142	202	86	4.2	P831_0070KX701_0010 MF EZ705U	700	700	1590	7.000	7/1	1800	1600	3000	65	4.5	2.5	125	60
429	149	248	91	4.0	P831_0070KX701_0010 MF EZ802U	670	670	1590	7.000	7/1	1800	1600	3000	89	4.5	2.5	125	69
429	178	322	108	3.3	P831_0070KX701_0010 MF EZ803U	850	850	1590	7.000	7/1	1800	1600	3000	114	4.5	2.5	125	75
500	56	64	47	4.6	P831_0030KX701_0020 MF EZ503U	250	250	770	6.000	6/1	1800	1800	3500	33	6.5	4.5	59	50
500	69	83	58	3.7	P831_0030KX701_0020 MF EZ702U	240	240	770	6.000	6/1	1800	1800	3500	39	6.5	4.5	59	53
500	77	92	65	3.3	P831_0030KX701_0020 MF EZ505U	360	360	770	6.000	6/1	1800	1800	3500	37	6.5	4.5	59	53
500	95	119	80	2.7	P831_0030KX701_0020 MF EZ703U	360	360	770	6.000	6/1	1800	1800	3500	47	6.5	4.5	59	55
500	122	173	103	2.1	P831_0030KX701_0020 MF EZ705U	360	360	770	6.000	6/1	1800	1800	3500	59	6.5	4.5	59	60
500	128	213	108	2.0	P831_0030KX701_0020 MF EZ802U	360	360	770	6.000	6/1	1800	1800	3500	83	6.5	4.5	59	69
500	152	276	128	1.7	P831_0030KX701_0020 MF EZ803U	360	360	770	6.000	6/1	1800	1800	3500	109	6.5	4.5	59	75
600	102	144	86	4.2	P831_0050KX701_0010 MF EZ705U	500	500	1130	5.000	5/1	1800	1600	3000	70	5.0	3.0	104	60
600	107	177	91	4.0	P831_0050KX701_0010 MF EZ802U	480	480	1130	5.000	5/1	1800	1600	3000	94	5.0	3.0	104	69
600	127	230	108	3.3	P831_0050KX701_0010 MF EZ803U	610	610	1130	5.000	5/1	1800	1600	3000	119	5.0	3.0	104	75
750	81	115	86	4.2	P831_0040KX701_0010 MF EZ705U	400	400	910	4.000	4/1	1800	1600	3000	77	5.5	3.5	84	60
750	85	142	91	4.0	P831_0040KX701_0010 MF EZ802U	380	380	910	4.000	4/1	1800	1600	3000	101	5.5	3.5	84	69
750	102	184	108	3.3	P831_0040KX701_0010 MF EZ803U	490	490	910	4.000	4/1	1800	1600	3000	127	5.5	3.5	84	75
1000	61	87	86	4.2	P831_0030KX701_0010 MF EZ705U	300	300	680	3.000	3/1	1800	1600	3000	101	6.5	4.5	59	60
1000	64	106	91	4.0	P831_0030KX701_0010 MF EZ802U	290	290	680	3.000	3/1	1800	1600	3000	125	6.5	4.5	59	69
1000	76	138	108	3.3	P831_0030KX701_0010 MF EZ803U	360	360	680	3.000	3/1	1800	1600	3000	150	6.5	4.5	59	75
P832KX (n_{1N} = 3000 rpm, $M_{2acc,max}$ = 1840 Nm)																		
14	845	924	108	1.5	P832_0700KX701_0030 MF EZ501U	1610	1610	3220	210.0	210/1	2100	2100	4000	15	4.0	2.0	163	52
15	805	880	170	1.3	P832_1000KX701_0020 MF EZ501U	1320	1320	2640	200.0	200/1	1800	1800	3500	18	4.0	2.0	148	52
20	604	660	67	2.3	P832_0500KX701_0030 MF EZ501U	1840	2000	3230	150.0	150/1	2100	2100	4000	15	4.0	2.0	172	52
20	1039	1123	116	1.4	P832_0500KX701_0030 MF EZ502U	1840	2000	3230	150.0	150/1	2100	2100	4000	18	4.0	2.0	172	53
20	1039	1165	116	1.4	P832_0500KX701_0030 MF EZ701U	1840	2000	3230	150.0	150/1	2100	2100	4000	21	4.0	2.0	172	55
21	563	616	97	2.2	P832_0700KX701_0020 MF EZ501U	1610	1610	3220	140.0	140/1	1800	1800	3500	18	4.0	2.0	163	52
21	969	1048	167	1.3	P832_0700KX701_0020 MF EZ502U	1610	1610	3220	140.0	140/1	1800	1800	3500	20	4.0	2.0	163	53
21	969	1087	167	1.3	P832_0700KX701_0020 MF EZ701U	1610	1610	3220	140.0	140/1	1800	1800	3500	23	4.0	2.0	163	55
25	483	528	70	2.3	P832_0400KX701_0030 MF EZ501U	1600	1600	3200	120.0	120/1	2100	2100	4000	15	4.5	2.5	166	52
25	831	898	120	1.3	P832_0400KX701_0030 MF EZ502U	1600	1600	3200	120.0	120/1	2100	2100	4000	18	4.5	2.5	166	53
25	831	932	120	1.3	P832_0400KX701_0030 MF EZ701U	1600	1600	3200	120.0	120/1	2100	2100	4000	21	4.5	2.5	166	55
29	422	462	47	3.4	P832_0350KX701_0030 MF EZ501U	1570	1570	3230	105.0	105/1	2100	2100	4000	15	4.5	2.5	173	52
29	727	786	81	1.9	P832_0350KX701_0030 MF EZ502U	1840	2000	3230	105.0	105/1	2100	2100	4000	18	4.5	2.5	173	53
29	727	816	81	1.9	P832_0350KX701_0030 MF EZ701U	1840	1970	3230	105.0	105/1	2100	2100	4000	21	4.5	2.5	173	55
29	953	1091	106	1.5	P832_0350KX701_0030 MF EZ503U	1840	2000	3230	105.0	105/1	2100	2100	4000	20	4.5	2.5	173	55
29	1179	1415	132	1.2	P832_0350KX701_0030 MF EZ702U	1840	2000	3230	105.0	105/1	2100	2100	4000	26	4.5	2.5	173	58
30	402	440	61	3.5	P832_0500KX701_0020 MF EZ501U	1500	1500	3230	100.0	100/1	1800	1800	3500	18	4.0	2.0	172	52
30	692	749	105	2.0	P832_0500KX701_0020 MF EZ502U	1840	2000	3230	100.0	100/1	1800	1800	3500	20	4.0	2.0	172	53
30	692	777	105	2.0	P832_0500KX701_0020 MF EZ701U	1840	1870	3230	100.0	100/1	1800	1800	3500	23	4.0	2.0	172	55
30	908	1039	137	1.6	P832_0500KX701_0020 MF EZ503U	1840	2000	3230	100.0	100/1	1800	1800	3500	22	4.0	2.0	172	55
30	1123	1347	170	1.3	P832_0500KX701_0020 MF EZ702U	1840	2000	3230	100.0	100/1	1800	1800	3500	29	4.0	2.0	172	58

n_{2N} [rpm]	M_{2N} [Nm]	$M_{2,0}$ [Nm]	a_{th}	S	Type	M_{2acc} [Nm]	M_{2accHT} [Nm]	M_{2NOT} [Nm]	i	i_{exakt}	n_{1maxDB} EL1,2,5,6 [rpm]	n_{1maxDB} EL3,4 [rpm]	n_{1maxZB} [rpm]	J_1 [kgcm²]	$\Delta\varphi_2$ [arcmin]	$\Delta\varphi_{2red}$ [arcmin]	C_2 [Nm/ arcmin]	m [kg]
P832KX (n_{1N} = 3000 rpm, $M_{2acc,max}$ = 1840 Nm)																		
36	338	369	49	3.3	P832_0280KX701_0030 MF EZ501U	1260	1260	3200	84.00	84/1	2100	2100	4000	15	4.5	2.5	168	52
36	582	629	84	1.9	P832_0280KX701_0030 MF EZ502U	1600	1600	3200	84.00	84/1	2100	2100	4000	18	4.5	2.5	168	53
36	582	652	84	1.9	P832_0280KX701_0030 MF EZ701U	1570	1570	3200	84.00	84/1	2100	2100	4000	21	4.5	2.5	168	55
36	762	872	109	1.4	P832_0280KX701_0030 MF EZ503U	1600	1600	3200	84.00	84/1	2100	2100	4000	20	4.5	2.5	168	55
36	943	1132	135	1.2	P832_0280KX701_0030 MF EZ702U	1600	1600	3200	84.00	84/1	2100	2100	4000	26	4.5	2.5	168	58
38	322	352	63	3.4	P832_0400KX701_0020 MF EZ501U	1200	1200	3200	80.00	80/1	1800	1800	3500	18	4.5	2.5	166	52
38	554	599	108	2.0	P832_0400KX701_0020 MF EZ502U	1600	1600	3200	80.00	80/1	1800	1800	3500	20	4.5	2.5	166	53
38	554	621	108	2.0	P832_0400KX701_0020 MF EZ701U	1500	1500	3200	80.00	80/1	1800	1800	3500	23	4.5	2.5	166	55
38	726	831	142	1.5	P832_0400KX701_0020 MF EZ503U	1600	1600	3200	80.00	80/1	1800	1800	3500	22	4.5	2.5	166	55
38	898	1078	175	1.2	P832_0400KX701_0020 MF EZ702U	1600	1600	3200	80.00	80/1	1800	1800	3500	29	4.5	2.5	166	58
38	1011	1198	197	1.1	P832_0400KX701_0020 MF EZ505U	1600	1600	3200	80.00	80/1	1800	1800	3500	27	4.5	2.5	166	58
40	302	330	37	4.3	P832_0250KX701_0030 MF EZ501U	1120	1120	3230	75.00	75/1	2100	2100	4000	16	4.5	2.5	172	52
40	519	561	63	2.5	P832_0250KX701_0030 MF EZ502U	1840	2000	3230	75.00	75/1	2100	2100	4000	18	4.5	2.5	172	53
40	519	583	63	2.5	P832_0250KX701_0030 MF EZ701U	1400	1400	3230	75.00	75/1	2100	2100	4000	21	4.5	2.5	172	55
40	681	779	83	1.9	P832_0250KX701_0030 MF EZ503U	1840	2000	3230	75.00	75/1	2100	2100	4000	20	4.5	2.5	172	55
40	842	1011	102	1.5	P832_0250KX701_0030 MF EZ702U	1840	2000	3230	75.00	75/1	2100	2100	4000	26	4.5	2.5	172	58
40	947	1123	115	1.4	P832_0250KX701_0030 MF EZ505U	1840	2000	3230	75.00	75/1	2100	2100	4000	25	4.5	2.5	172	58
43	485	524	73	2.9	P832_0350KX701_0020 MF EZ502U	1840	2000	3230	70.00	70/1	1800	1800	3500	20	4.5	2.5	173	53
43	485	544	73	2.9	P832_0350KX701_0020 MF EZ701U	1310	1310	3230	70.00	70/1	1800	1800	3500	24	4.5	2.5	173	55
43	635	727	96	2.2	P832_0350KX701_0020 MF EZ503U	1840	2000	3230	70.00	70/1	1800	1800	3500	23	4.5	2.5	173	55
43	786	943	119	1.8	P832_0350KX701_0020 MF EZ702U	1840	2000	3230	70.00	70/1	1800	1800	3500	29	4.5	2.5	173	58
43	884	1048	134	1.6	P832_0350KX701_0020 MF EZ505U	1840	2000	3230	70.00	70/1	1800	1800	3500	27	4.5	2.5	173	58
43	1081	1362	163	1.3	P832_0350KX701_0020 MF EZ703U	1840	2000	3230	70.00	70/1	1800	1800	3500	37	4.5	2.5	173	60
47	258	281	47	4.6	P832_0320KX701_0020 MF EZ501U	960	960	3050	64.00	64/1	1800	1800	3500	19	4.5	2.5	157	52
47	443	479	81	2.6	P832_0320KX701_0020 MF EZ502U	1520	1600	3050	64.00	64/1	1800	1800	3500	21	4.5	2.5	157	53
47	443	497	81	2.6	P832_0320KX701_0020 MF EZ701U	1200	1200	3050	64.00	64/1	1800	1800	3500	24	4.5	2.5	157	55
47	581	665	106	2.0	P832_0320KX701_0020 MF EZ503U	1520	1600	3050	64.00	64/1	1800	1800	3500	23	4.5	2.5	157	55
47	719	862	131	1.6	P832_0320KX701_0020 MF EZ702U	1520	1600	3050	64.00	64/1	1800	1800	3500	29	4.5	2.5	157	58
47	808	958	148	1.5	P832_0320KX701_0020 MF EZ505U	1520	1600	3050	64.00	64/1	1800	1800	3500	28	4.5	2.5	157	58
50	415	449	52	3.0	P832_0200KX701_0030 MF EZ502U	1740	1740	3230	60.00	60/1	2100	2100	4000	18	4.5	2.5	169	53
50	415	466	52	3.0	P832_0200KX701_0030 MF EZ701U	1120	1120	3230	60.00	60/1	2100	2100	4000	21	4.5	2.5	169	55
50	545	623	69	2.3	P832_0200KX701_0030 MF EZ503U	1840	2000	3230	60.00	60/1	2100	2100	4000	20	4.5	2.5	169	55
50	674	808	85	1.9	P832_0200KX701_0030 MF EZ702U	1840	2000	3230	60.00	60/1	2100	2100	4000	27	4.5	2.5	169	58
50	758	898	96	1.6	P832_0200KX701_0030 MF EZ505U	1840	2000	3230	60.00	60/1	2100	2100	4000	25	4.5	2.5	169	58
50	926	1168	117	1.3	P832_0200KX701_0030 MF EZ703U	1840	2000	3230	60.00	60/1	2100	2100	4000	34	4.5	2.5	169	60
54	225	246	44	4.9	P832_0280KX701_0020 MF EZ501U	840	840	3200	56.00	56/1	1800	1800	3500	18	4.5	2.5	168	52
54	388	419	75	2.8	P832_0280KX701_0020 MF EZ502U	1600	1600	3200	56.00	56/1	1800	1800	3500	20	4.5	2.5	168	53
54	388	435	75	2.8	P832_0280KX701_0020 MF EZ701U	1050	1050	3200	56.00	56/1	1800	1800	3500	24	4.5	2.5	168	55
54	508	582	99	2.2	P832_0280KX701_0020 MF EZ503U	1600	1600	3200	56.00	56/1	1800	1800	3500	23	4.5	2.5	168	55
54	629	755	122	1.7	P832_0280KX701_0020 MF EZ702U	1600	1600	3200	56.00	56/1	1800	1800	3500	29	4.5	2.5	168	58
54	707	838	138	1.6	P832_0280KX701_0020 MF EZ505U	1600	1600	3200	56.00	56/1	1800	1800	3500	27	4.5	2.5	168	58
54	865	1090	168	1.3	P832_0280KX701_0020 MF EZ703U	1600	1600	3200	56.00	56/1	1800	1800	3500	37	4.5	2.5	168	60
60	346	374	57	3.8	P832_0250KX701_0020 MF EZ502U	1450	1450	3230	50.00	50/1	1800	1800	3500	21	4.5	2.5	172	53
60	346	388	57	3.8	P832_0250KX701_0020 MF EZ701U	940	940	3230	50.00	50/1	1800	1800	3500	24	4.5	2.5	172	55
60	454	519	75	2.9	P832_0250KX701_0020 MF EZ503U	1840	2000	3230	50.00	50/1	1800	1800	3500	23	4.5	2.5	172	55
60	561	674	92	2.3	P832_0250KX701_0020 MF EZ702U	1840	1920	3230	50.00	50/1	1800	1800	3500	29	4.5	2.5	172	58
60	632	749	104	2.1	P832_0250KX701_0020 MF EZ505U	1840	2000	3230	50.00	50/1	1800	1800	3500	27	4.5	2.5	172	58
60	772	973	127	1.7	P832_0250KX701_0020 MF EZ703U	1840	2000	3230	50.00	50/1	1800	1800	3500	37	4.5	2.5	172	60
60	997	1413	164	1.3	P832_0250KX701_0020 MF EZ705U	1840	2000	3230	50.00	50/1	1800	1800	3500	49	4.5	2.5	172	65
75	277	299	47	4.5	P832_0200KX701_0020 MF EZ502U	1160	1160	3230	40.00	40/1	1800	1800	3500	21	4.5	2.5	169	53
75	277	311	47	4.5	P832_0200KX701_0020 MF EZ701U	750	750	3230	40.00	40/1	1800	1800	3500	24	4.5	2.5	169	55
75	363	415	62	3.4	P832_0200KX701_0020 MF EZ503U	1610	1610	3230	40.00	40/1	1800	1800	3500	23	4.5	2.5	169	55
75	449	539	77	2.8	P832_0200KX701_0020 MF EZ702U	1530	1530	3230	40.00	40/1	1800	1800	3500	29	4.5	2.5	169	58
75	505	599	87	2.5	P832_0200KX701_0020 MF EZ505U	1840	2000	3230	40.00	40/1	1800	1800	3500	28	4.5	2.5	169	58
75	618	779	106	2.0	P832_0200KX701_0020 MF EZ703U	1840	2000	3230	40.00	40/1	1800	1800	3500	37	4.5	2.5	169	60
75	797	1130	137	1.6	P832_0200KX701_0020 MF EZ705U	1840	2000	3230	40.00	40/1	1800	1800	3500	50	4.5	2.5	169	65
75	835	1389	143	1.5	P832_0200KX701_0020 MF EZ802U	1840	2000	3230	40.00	40/1	1800	1800	3500	74	4.5	2.5	169	73
86	318	364	91	4.0	P832_0350KX701_0010 MF EZ503U	1410	1410	3230	35.00	35/1	1800	1600	3000	34	4.5	2.5	173	55
86	393	472	112	3.2	P832_0350KX701_0010 MF EZ702U	1340	1340	3230	35.00	35/1	1800	1600	3000	40	4.5	2.5	173	58
86	442	524	126	2.8	P832_0350KX701_0010 MF EZ505U	1840	2000	3230	35.00	35/1	1800	1600	3000	38	4.5	2.5	173	58
86	540	681	155	2.3	P832_0350KX701_0010 MF EZ703U	1840	2000	3230	35.00	35/1	1800	1600	3000	48	4.5	2.5	173	60
86	698	989	199	1.8	P832_0350KX701_0010 MF EZ705U	1840	2000	3230	35.00	35/1	1800	1600	3000	60	4.5	2.5	173	65
86	730	1215	209	1.7	P832_0350KX701_0010 MF EZ802U	1840	2000	3230	35.00	35/1	1800	1600	3000	84	4.5	2.5	173	73
94	222	240	43	5.0	P832_0160KX701_0020 MF EZ502U	930	930	3200	32.00	32/1	1800	1800	3500	21	4.5	2.5	163	53

n_{2N} [rpm]	M_{2N} [Nm]	$M_{2,0}$ [Nm]	a_{th}	S	Type	M_{2acc} [Nm]	M_{2accHT} [Nm]	M_{2NOT} [Nm]	i	i_{exakt}	n_{1maxDB} EL1,2,5,6 [rpm]	n_{1maxDB} EL3,4 [rpm]	n_{1maxZB} [rpm]	J_1 [kgcm²]	$\Delta\varphi_2$ [arcmin]	$\Delta\varphi_{2red}$ [arcmin]	C_2 [Nm/ arcmin]	m [kg]
P832KX (n_{1N} = 3000 rpm, $M_{2acc,max}$ = 1840 Nm)																		
94	222	249	43	5.0	P832_0160KX701_0020 MF EZ701U	600	600	3200	32.00	32/1	1800	1800	3500	24	4.5	2.5	163	55
94	290	332	57	3.8	P832_0160KX701_0020 MF EZ503U	1290	1290	3200	32.00	32/1	1800	1800	3500	23	4.5	2.5	163	55
94	359	431	70	3.1	P832_0160KX701_0020 MF EZ702U	1230	1230	3200	32.00	32/1	1800	1800	3500	30	4.5	2.5	163	58
94	404	479	79	2.7	P832_0160KX701_0020 MF EZ505U	1600	1600	3200	32.00	32/1	1800	1800	3500	28	4.5	2.5	163	58
94	494	623	96	2.2	P832_0160KX701_0020 MF EZ703U	1600	1600	3200	32.00	32/1	1800	1800	3500	37	4.5	2.5	163	60
94	638	904	124	1.7	P832_0160KX701_0020 MF EZ705U	1600	1600	3200	32.00	32/1	1800	1800	3500	50	4.5	2.5	163	65
94	668	1111	130	1.6	P832_0160KX701_0020 MF EZ802U	1600	1600	3200	32.00	32/1	1800	1800	3500	74	4.5	2.5	163	73
P932KX (n_{1N} = 2000 rpm, $M_{2acc,max}$ = 3300 Nm)																		
57	1431	2165	217	1.7	P932_0350KX701_0010 MF EZ805U	3300	–	6600	35.00	35/1	1800	1600	3000	163	4.5	–	391	118
71	1145	1732	181	2.0	P932_0280KX701_0010 MF EZ805U	3000	–	6000	28.00	28/1	1800	1600	3000	163	4.5	–	381	118
80	1022	1546	155	2.3	P932_0250KX701_0010 MF EZ805U	2970	–	5790	25.00	25/1	1800	1600	3000	168	4.5	–	381	118
100	818	1237	155	2.3	P932_0200KX701_0010 MF EZ805U	2380	–	4630	20.00	20/1	1800	1600	3000	176	4.5	–	368	118
125	654	990	155	2.3	P932_0160KX701_0010 MF EZ805U	1900	–	3710	16.00	16/1	1800	1600	3000	177	4.5	–	348	118
P932KX (n_{1N} = 3000 rpm, $M_{2acc,max}$ = 3300 Nm)																		
10	1207	1319	113	1.4	P932_1000KX701_0030 MF EZ501U	2200	–	4400	300.0	300/1	2100	2100	4000	16	4.0	–	320	77
14	845	924	56	2.8	P932_0700KX701_0030 MF EZ501U	3140	–	6310	210.0	210/1	2100	2100	4000	16	4.0	–	369	77
14	1454	1572	96	1.6	P932_0700KX701_0030 MF EZ502U	3160	–	6310	210.0	210/1	2100	2100	4000	18	4.0	–	369	78
14	1454	1631	96	1.6	P932_0700KX701_0030 MF EZ701U	3160	–	6310	210.0	210/1	2100	2100	4000	21	4.0	–	369	80
14	1906	2181	126	1.3	P932_0700KX701_0030 MF EZ503U	3160	–	6310	210.0	210/1	2100	2100	4000	20	4.0	–	369	80
15	805	880	102	2.1	P932_1000KX701_0020 MF EZ501U	2200	–	4400	200.0	200/1	1800	1800	3500	18	4.0	–	320	77
15	1385	1497	175	1.2	P932_1000KX701_0020 MF EZ502U	2200	–	4400	200.0	200/1	1800	1800	3500	21	4.0	–	320	78
15	1385	1553	175	1.2	P932_1000KX701_0020 MF EZ701U	2200	–	4400	200.0	200/1	1800	1800	3500	24	4.0	–	320	80
20	604	660	42	3.8	P932_0500KX701_0030 MF EZ501U	2250	–	6400	150.0	150/1	2100	2100	4000	16	4.0	–	393	77
20	1039	1123	71	2.2	P932_0500KX701_0030 MF EZ502U	3200	–	6400	150.0	150/1	2100	2100	4000	18	4.0	–	393	78
20	1039	1165	71	2.2	P932_0500KX701_0030 MF EZ701U	2810	–	6400	150.0	150/1	2100	2100	4000	21	4.0	–	393	80
20	1362	1558	94	1.7	P932_0500KX701_0030 MF EZ503U	3200	–	6400	150.0	150/1	2100	2100	4000	20	4.0	–	393	80
20	1684	2021	116	1.4	P932_0500KX701_0030 MF EZ702U	3200	–	6400	150.0	150/1	2100	2100	4000	26	4.0	–	393	83
20	1895	2246	130	1.2	P932_0500KX701_0030 MF EZ505U	3200	–	6400	150.0	150/1	2100	2100	4000	25	4.0	–	393	83
21	563	616	51	4.2	P932_0700KX701_0020 MF EZ501U	2100	–	6310	140.0	140/1	1800	1800	3500	18	4.0	–	369	77
21	969	1048	87	2.5	P932_0700KX701_0020 MF EZ502U	3160	–	6310	140.0	140/1	1800	1800	3500	21	4.0	–	369	78
21	969	1087	87	2.5	P932_0700KX701_0020 MF EZ701U	2620	–	6310	140.0	140/1	1800	1800	3500	24	4.0	–	369	80
21	1271	1454	114	1.9	P932_0700KX701_0020 MF EZ503U	3160	–	6310	140.0	140/1	1800	1800	3500	23	4.0	–	369	80
21	1572	1886	141	1.5	P932_0700KX701_0020 MF EZ702U	3160	–	6310	140.0	140/1	1800	1800	3500	29	4.0	–	369	83
21	1769	2096	159	1.4	P932_0700KX701_0020 MF EZ505U	3160	–	6310	140.0	140/1	1800	1800	3500	28	4.0	–	369	83
25	483	528	38	4.1	P932_0400KX701_0030 MF EZ501U	1800	–	6000	120.0	120/1	2100	2100	4000	16	4.5	–	384	77
25	831	898	66	2.4	P932_0400KX701_0030 MF EZ502U	3000	–	6000	120.0	120/1	2100	2100	4000	18	4.5	–	384	78
25	831	932	66	2.4	P932_0400KX701_0030 MF EZ701U	2250	–	6000	120.0	120/1	2100	2100	4000	21	4.5	–	384	80
25	1089	1246	86	1.8	P932_0400KX701_0030 MF EZ503U	3000	–	6000	120.0	120/1	2100	2100	4000	20	4.5	–	384	80
25	1347	1617	106	1.5	P932_0400KX701_0030 MF EZ702U	3000	–	6000	120.0	120/1	2100	2100	4000	26	4.5	–	384	83
25	1516	1797	120	1.3	P932_0400KX701_0030 MF EZ505U	3000	–	6000	120.0	120/1	2100	2100	4000	25	4.5	–	384	83
29	727	786	48	3.3	P932_0350KX701_0030 MF EZ502U	3050	–	6600	105.0	105/1	2100	2100	4000	18	4.5	–	391	78
29	727	816	48	3.3	P932_0350KX701_0030 MF EZ701U	1970	–	6600	105.0	105/1	2100	2100	4000	22	4.5	–	391	80
29	953	1091	63	2.5	P932_0350KX701_0030 MF EZ503U	3300	–	6600	105.0	105/1	2100	2100	4000	21	4.5	–	391	80
29	1179	1415	78	2.0	P932_0350KX701_0030 MF EZ702U	3300	–	6600	105.0	105/1	2100	2100	4000	27	4.5	–	391	83
29	1326	1572	88	1.8	P932_0350KX701_0030 MF EZ505U	3300	–	6600	105.0	105/1	2100	2100	4000	25	4.5	–	391	83
29	1621	2044	108	1.5	P932_0350KX701_0030 MF EZ703U	3300	–	6600	105.0	105/1	2100	2100	4000	35	4.5	–	391	85
30	692	749	65	3.3	P932_0500KX701_0020 MF EZ502U	2900	–	6400	100.0	100/1	1800	1800	3500	21	4.0	–	393	78
30	692	777	65	3.3	P932_0500KX701_0020 MF EZ701U	1870	–	6400	100.0	100/1	1800	1800	3500	24	4.0	–	393	80
30	908	1039	85	2.5	P932_0500KX701_0020 MF EZ503U	3200	–	6400	100.0	100/1	1800	1800	3500	23	4.0	–	393	80
30	1123	1347	105	2.0	P932_0500KX701_0020 MF EZ702U	3200	–	6400	100.0	100/1	1800	1800	3500	29	4.0	–	393	83
30	1263	1497	118	1.8	P932_0500KX701_0020 MF EZ505U	3200	–	6400	100.0	100/1	1800	1800	3500	28	4.0	–	393	83
30	1544	1946	144	1.5	P932_0500KX701_0020 MF EZ703U	3200	–	6400	100.0	100/1	1800	1800	3500	37	4.0	–	393	85
36	582	629	40	3.9	P932_0280KX701_0030 MF EZ502U	2440	–	6000	84.00	84/1	2100	2100	4000	18	4.5	–	381	78
36	582	652	40	3.9	P932_0280KX701_0030 MF EZ701U	1570	–	6000	84.00	84/1	2100	2100	4000	22	4.5	–	381	80
36	762	872	53	3.0	P932_0280KX701_0030 MF EZ503U	3000	–	6000	84.00	84/1	2100	2100	4000	21	4.5	–	381	80
36	943	1132	65	2.4	P932_0280KX701_0030 MF EZ702U	3000	–	6000	84.00	84/1	2100	2100	4000	27	4.5	–	381	83
36	1061	1258	73	2.1	P932_0280KX701_0030 MF EZ505U	3000	–	6000	84.00	84/1	2100	2100	4000	25	4.5	–	381	83
36	1297	1635	90	1.8	P932_0280KX701_0030 MF EZ703U	3000	–	6000	84.00	84/1	2100	2100	4000	35	4.5	–	381	85
38	554	599	59	3.6	P932_0400KX701_0020 MF EZ502U	2320	–	6000	80.00	80/1	1800	1800	3500	21	4.5	–	384	78
38	554	621	59	3.6	P932_0400KX701_0020 MF EZ701U	1500	–	6000	80.00	80/1	1800	1800	3500	24	4.5	–	384	80
38	726	831	78	2.8	P932_0400KX701_0020 MF EZ503U	3000	–	6000	80.00	80/1	1800	1800	3500	23	4.5	–	384	80
38	898	1078	96	2.2	P932_0400KX701_0020 MF EZ702U	3000	–	6000	80.00	80/1	1800	1800	3500	29	4.5	–	384	83
38	1011	1198	108	2.0	P932_0400KX701_0020 MF EZ505U	3000	–	6000	80.00	80/1	1800	1800	3500	28	4.5	–	384	83
38	1235	1557	132	1.6	P932_0400KX701_0020 MF EZ703U	3000	–	6000	80.00	80/1	1800	1800	3500	37	4.5	–	384	85

n_{2N} [rpm]	M_{2N} [Nm]	$M_{2,0}$ [Nm]	a_{th}	S	Type	M_{2acc} [Nm]	M_{2accHT} [Nm]	M_{2NOT} [Nm]	i	i_{exakt}	n_{1maxDB} EL1,2,5,6 [rpm]	n_{1maxDB} EL3,4 [rpm]	n_{1maxZB} [rpm]	J_1 [kgcm²]	$\Delta\varphi_2$ [arcmin]	$\Delta\varphi_{2red}$ [arcmin]	C_2 [Nm/ arcmin]	m [kg]
P932KX (n_{1N} = 3000 rpm, $M_{2acc,max}$ = 3300 Nm)																		
38	1595	2261	171	1.3	P932_0400KX701_0020 MF EZ705U	3000	–	6000	80.00	80/1	1800	1800	3500	49	4.5	–	384	90
40	519	561	40	4.0	P932_0250KX701_0030 MF EZ502U	2180	–	6580	75.00	75/1	2100	2100	4000	19	4.5	–	381	78
40	519	583	40	4.0	P932_0250KX701_0030 MF EZ701U	1400	–	6580	75.00	75/1	2100	2100	4000	22	4.5	–	381	80
40	681	779	52	3.0	P932_0250KX701_0030 MF EZ503U	2970	–	6580	75.00	75/1	2100	2100	4000	21	4.5	–	381	80
40	842	1011	64	2.5	P932_0250KX701_0030 MF EZ702U	2880	–	6580	75.00	75/1	2100	2100	4000	27	4.5	–	381	83
40	947	1123	72	2.2	P932_0250KX701_0030 MF EZ505U	2970	–	6580	75.00	75/1	2100	2100	4000	26	4.5	–	381	83
40	1158	1460	88	1.8	P932_0250KX701_0030 MF EZ703U	2970	–	6580	75.00	75/1	2100	2100	4000	35	4.5	–	381	85
40	1495	2119	114	1.4	P932_0250KX701_0030 MF EZ705U	2970	–	6580	75.00	75/1	2100	2100	4000	48	4.5	–	381	90
43	485	524	44	4.9	P932_0350KX701_0020 MF EZ502U	2030	–	6600	70.00	70/1	1800	1800	3500	21	4.5	–	391	78
43	485	544	44	4.9	P932_0350KX701_0020 MF EZ701U	1310	–	6600	70.00	70/1	1800	1800	3500	25	4.5	–	391	80
43	635	727	57	3.7	P932_0350KX701_0020 MF EZ503U	2820	–	6600	70.00	70/1	1800	1800	3500	24	4.5	–	391	80
43	786	943	71	3.0	P932_0350KX701_0020 MF EZ702U	2690	–	6600	70.00	70/1	1800	1800	3500	30	4.5	–	391	83
43	884	1048	80	2.7	P932_0350KX701_0020 MF EZ505U	3300	–	6600	70.00	70/1	1800	1800	3500	28	4.5	–	391	83
43	1081	1362	97	2.2	P932_0350KX701_0020 MF EZ703U	3300	–	6600	70.00	70/1	1800	1800	3500	38	4.5	–	391	85
43	1395	1978	126	1.7	P932_0350KX701_0020 MF EZ705U	3300	–	6600	70.00	70/1	1800	1800	3500	50	4.5	–	391	90
43	1461	2430	132	1.6	P932_0350KX701_0020 MF EZ802U	3300	–	6600	70.00	70/1	1800	1800	3500	74	4.5	–	391	98
50	415	449	40	4.0	P932_0200KX701_0030 MF EZ502U	1740	–	5260	60.00	60/1	2100	2100	4000	20	4.5	–	368	78
50	415	466	40	4.0	P932_0200KX701_0030 MF EZ701U	1120	–	5260	60.00	60/1	2100	2100	4000	23	4.5	–	368	80
50	545	623	52	3.0	P932_0200KX701_0030 MF EZ503U	2380	–	5260	60.00	60/1	2100	2100	4000	22	4.5	–	368	80
50	674	808	64	2.5	P932_0200KX701_0030 MF EZ702U	2300	–	5260	60.00	60/1	2100	2100	4000	28	4.5	–	368	83
50	758	898	72	2.2	P932_0200KX701_0030 MF EZ505U	2380	–	5260	60.00	60/1	2100	2100	4000	27	4.5	–	368	83
50	926	1168	88	1.8	P932_0200KX701_0030 MF EZ703U	2380	–	5260	60.00	60/1	2100	2100	4000	36	4.5	–	368	85
50	1196	1696	114	1.4	P932_0200KX701_0030 MF EZ705U	2380	–	5260	60.00	60/1	2100	2100	4000	48	4.5	–	368	90
54	508	582	48	4.5	P932_0280KX701_0020 MF EZ503U	2250	–	6000	56.00	56/1	1800	1800	3500	24	4.5	–	381	80
54	629	755	59	3.6	P932_0280KX701_0020 MF EZ702U	2150	–	6000	56.00	56/1	1800	1800	3500	30	4.5	–	381	83
54	707	838	66	3.2	P932_0280KX701_0020 MF EZ505U	3000	–	6000	56.00	56/1	1800	1800	3500	28	4.5	–	381	83
54	865	1090	81	2.6	P932_0280KX701_0020 MF EZ703U	3000	–	6000	56.00	56/1	1800	1800	3500	38	4.5	–	381	85
54	1116	1583	105	2.0	P932_0280KX701_0020 MF EZ705U	3000	–	6000	56.00	56/1	1800	1800	3500	50	4.5	–	381	90
54	1169	1944	110	2.0	P932_0280KX701_0020 MF EZ802U	3000	–	6000	56.00	56/1	1800	1800	3500	74	4.5	–	381	98
60	454	519	47	4.6	P932_0250KX701_0020 MF EZ503U	2010	–	6580	50.00	50/1	1800	1800	3500	25	4.5	–	381	80
60	561	674	58	3.7	P932_0250KX701_0020 MF EZ702U	1920	–	6580	50.00	50/1	1800	1800	3500	31	4.5	–	381	83
60	632	749	65	3.3	P932_0250KX701_0020 MF EZ505U	2970	–	6580	50.00	50/1	1800	1800	3500	30	4.5	–	381	83
60	772	973	80	2.7	P932_0250KX701_0020 MF EZ703U	2970	–	6580	50.00	50/1	1800	1800	3500	39	4.5	–	381	85
60	997	1413	103	2.1	P932_0250KX701_0020 MF EZ705U	2970	–	6580	50.00	50/1	1800	1800	3500	51	4.5	–	381	90
60	1043	1736	108	2.0	P932_0250KX701_0020 MF EZ802U	2970	–	6580	50.00	50/1	1800	1800	3500	75	4.5	–	381	98
60	1245	2255	128	1.7	P932_0250KX701_0020 MF EZ803U	2970	–	6580	50.00	50/1	1800	1800	3500	101	4.5	–	381	105
75	363	415	47	4.6	P932_0200KX701_0020 MF EZ503U	1610	–	5260	40.00	40/1	1800	1800	3500	27	4.5	–	368	80
75	449	539	58	3.7	P932_0200KX701_0020 MF EZ702U	1530	–	5260	40.00	40/1	1800	1800	3500	33	4.5	–	368	83
75	505	599	65	3.3	P932_0200KX701_0020 MF EZ505U	2380	–	5260	40.00	40/1	1800	1800	3500	31	4.5	–	368	83
75	618	779	80	2.7	P932_0200KX701_0020 MF EZ703U	2380	–	5260	40.00	40/1	1800	1800	3500	41	4.5	–	368	85
75	797	1130	103	2.1	P932_0200KX701_0020 MF EZ705U	2380	–	5260	40.00	40/1	1800	1800	3500	53	4.5	–	368	90
75	835	1389	108	2.0	P932_0200KX701_0020 MF EZ802U	2380	–	5260	40.00	40/1	1800	1800	3500	77	4.5	–	368	98
75	996	1804	128	1.7	P932_0200KX701_0020 MF EZ803U	2380	–	5260	40.00	40/1	1800	1800	3500	103	4.5	–	368	105
86	540	681	82	4.4	P932_0350KX701_0010 MF EZ703U	2130	–	6600	35.00	35/1	1800	1600	3000	52	4.5	–	391	85
86	698	989	106	3.4	P932_0350KX701_0010 MF EZ705U	3300	–	6600	35.00	35/1	1800	1600	3000	64	4.5	–	391	90
86	730	1215	111	3.3	P932_0350KX701_0010 MF EZ802U	3280	–	6600	35.00	35/1	1800	1600	3000	89	4.5	–	391	98
86	871	1579	132	2.7	P932_0350KX701_0010 MF EZ803U	3300	–	6600	35.00	35/1	1800	1600	3000	114	4.5	–	391	105
94	290	332	47	4.6	P932_0160KX701_0020 MF EZ503U	1290	–	4210	32.00	32/1	1800	1800	3500	27	4.5	–	348	80
94	359	431	58	3.7	P932_0160KX701_0020 MF EZ702U	1230	–	4210	32.00	32/1	1800	1800	3500	33	4.5	–	348	83
94	404	479	65	3.3	P932_0160KX701_0020 MF EZ505U	1900	–	4210	32.00	32/1	1800	1800	3500	32	4.5	–	348	83
94	494	623	80	2.7	P932_0160KX701_0020 MF EZ703U	1900	–	4210	32.00	32/1	1800	1800	3500	41	4.5	–	348	85
94	638	904	103	2.1	P932_0160KX701_0020 MF EZ705U	1900	–	4210	32.00	32/1	1800	1800	3500	54	4.5	–	348	90
94	668	1111	108	2.0	P932_0160KX701_0020 MF EZ802U	1900	–	4210	32.00	32/1	1800	1800	3500	78	4.5	–	348	98
94	797	1443	128	1.7	P932_0160KX701_0020 MF EZ803U	1900	–	4210	32.00	32/1	1800	1800	3500	103	4.5	–	348	105
107	558	791	88	4.1	P932_0280KX701_0010 MF EZ705U	2720	–	6000	28.00	28/1	1800	1600	3000	65	4.5	–	381	90
107	584	972	92	3.9	P932_0280KX701_0010 MF EZ802U	2620	–	6000	28.00	28/1	1800	1600	3000	89	4.5	–	381	98
107	697	1263	110	3.3	P932_0280KX701_0010 MF EZ803U	3000	–	6000	28.00	28/1	1800	1600	3000	114	4.5	–	381	105
120	498	706	86	4.2	P932_0250KX701_0010 MF EZ705U	2430	–	5790	25.00	25/1	1800	1600	3000	70	4.5	–	381	90
120	522	868	91	4.0	P932_0250KX701_0010 MF EZ802U	2340	–	5790	25.00	25/1	1800	1600	3000	94	4.5	–	381	98
120	622	1128	108	3.3	P932_0250KX701_0010 MF EZ803U	2970	–	5790	25.00	25/1	1800	1600	3000	119	4.5	–	381	105
150	399	565	86	4.2	P932_0200KX701_0010 MF EZ705U	1950	–	4630	20.00	20/1	1800	1600	3000	77	4.5	–	368	90
150	417	694	91	4.0	P932_0200KX701_0010 MF EZ802U	1870	–	4630	20.00	20/1	1800	1600	3000	101	4.5	–	368	98
150	498	902	108	3.3	P932_0200KX701_0010 MF EZ803U	2380	–	4630	20.00	20/1	1800	1600	3000	127	4.5	–	368	105
188	319	452	86	4.2	P932_0160KX701_0010 MF EZ705U	1560	–	3710	16.00	16/1	1800	1600	3000	78	4.5	–	348	90

n_{2N} [rpm]	M_{2N} [Nm]	$M_{2,0}$ [Nm]	a_{th}	S	Type	M_{2acc} [Nm]	M_{2accHT} [Nm]	M_{2NOT} [Nm]	i	i_{exakt}	n_{1maxDB} EL1,2,5,6 [rpm]	n_{1maxDB} EL3,4 [rpm]	n_{1maxZB} [rpm]	J_1 [kgcm²]	$\Delta\varphi_2$ [arcmin]	$\Delta\varphi_{2red}$ [arcmin]	C_2 [Nm/arcmin]	m [kg]
P932KX (n_{1N} = 3000 rpm, $M_{2acc,max}$ = 3300 Nm)																		
188	334	555	91	4.0	P932_0160KX701_0010 MF EZ802U	1500	–	3710	16.00	16/1	1800	1600	3000	102	4.5	–	348	98
188	398	722	108	3.3	P932_0160KX701_0010 MF EZ803U	1900	–	3710	16.00	16/1	1800	1600	3000	128	4.5	–	348	105

10.3 Dimensional drawings

In this chapter you can find the dimensions of the geared motors.

There is a dimensional drawing for every possible shaft/housing design, each with the tables for gear unit dimensions, motor dimensions and geared motor dimensions.

Dimensions can exceed the specifications of ISO 2768-mK due to casting tolerances or accumulation of individual tolerances.

We reserve the right to make dimensional changes due to ongoing technical development.

You can download 3D models of our standard drives at http://configurator.stoeber.de.

Combination options and the dimensions of forced ventilated geared motors can also be found at http://configurator.stoeber.de.

Tolerances

Solid shaft	Tolerance
Fit	ISO k6
Feather keys	DIN 6885-1, high form A
Balancing	With half feather key

Centering holes in solid shafts in accordance with DIN 332-2, DR shape

Thread size	M4	M5	M6	M8	M10	M12	M16	M20	M24
Thread depth [mm]	10	12.5	16	19	22	28	36	42	50

10.3.1 G shaft design (solid shaft without feather key)

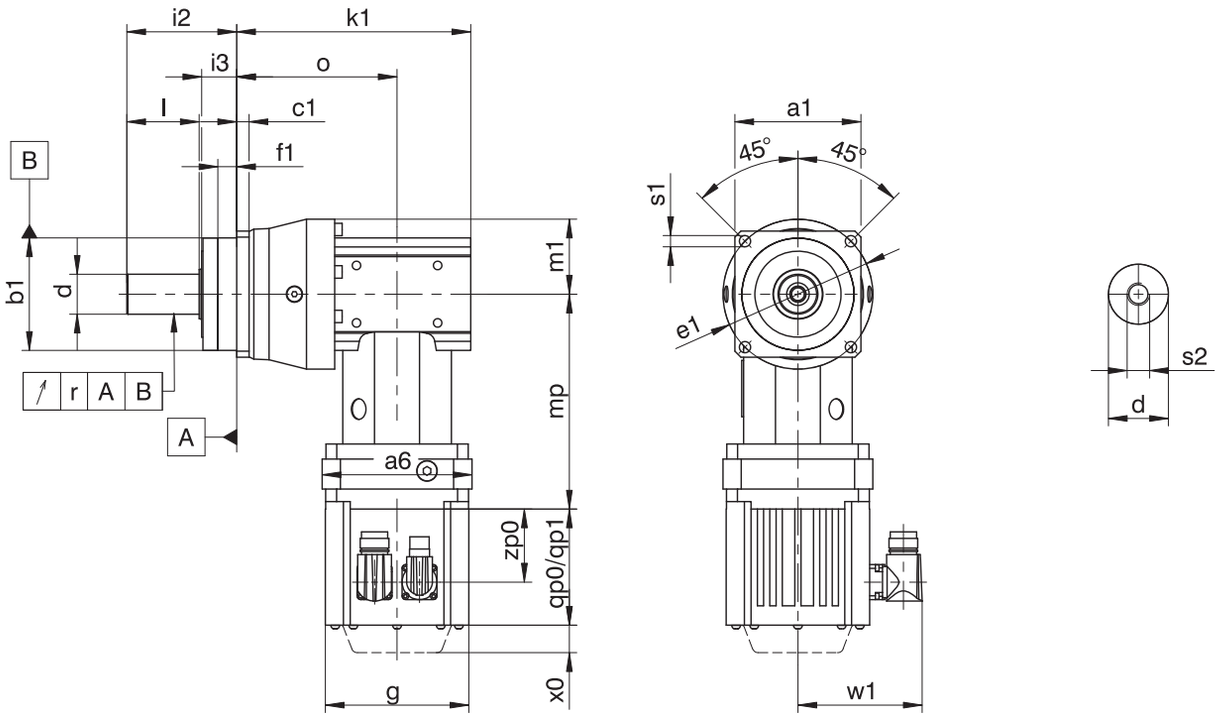

qp0	Applies to motors without brake.	qp1	Applies to motors with brake.
x0	Applies to encoders using an optical measuring method.	w1	Different for the One Cable Solution (OCS), see the chapter [▸ 17.4]
–	The radial runout specification applies only to the reinforced bearing D.		

Dimensions of gear units

Type	□a1	Øb1	c1	Ød	Øe1	f1	i2	i3	k1	l	m1	o	r	Øs1	s2
P231_KX301_	55	50_{h6}	6	12_{k6}	63	7.0	36	12	124.0	22	31	84.0	–	5.5	M4
P331_KX301_	72	60_{h6}	7	16_{k6}	75	7.5	48	18	131.0	28	36	91.0	0.025	5.5	M5
P332_KX301_	72	60_{h6}	7	16_{k6}	75	7.5	48	18	165.5	28	36	125.5	0.025	5.5	M5
P431_KX401_	76	70_{h6}	9	22_{k6}	85	7.5	56	18	165.0	36	49	115.0	0.025	6.6	M8
P432_KX301_	76	70_{h6}	9	22_{k6}	85	7.5	56	18	180.0	36	49	140.0	0.025	6.6	M8
P531_KX501_	101	90_{h6}	10	32_{k6}	120	15.0	88	28	187.5	58	57	128.5	0.030	9.0	M12
P532_KX401_	101	90_{h6}	10	32_{k6}	120	15.0	88	28	207.0	58	57	157.0	0.030	9.0	M12
P731_KX701_	144	130_{h6}	15	40_{k6}	165	3.5	112	27	232.5	82	72	158.5	0.035	11.0	M16
P732_KX501_	144	130_{h6}	15	40_{k6}	165	3.5	112	27	255.5	82	72	196.5	0.035	11.0	M16
P831_KX701_	190	160_{h6}	15	55_{k6}	215	10.0	112	27	267.0	82	95	193.0	0.035	13.5	M20
P832_KX701_	190	160_{h6}	15	55_{k6}	215	10.0	112	27	324.5	82	95	250.5	0.035	13.5	M20
P932_KX701_	212	180_{h6}	17	75_{k6}	250	10.0	143	34	388.0	105	113	314.0	0.040	17.5	M20

Dimensions of motors

Type	□g	qp0	qp1	w1	x0	zp0
EZ301U	72	90	130.0	55.5	21	54.5
EZ302U	72	112	152.0	55.5	21	76.5
EZ303U	72	134	174.0	55.5	21	98.5
EZ401U	98	98	146.5	91.0	22	56.0
EZ402U	98	123	171.5	91.0	22	81.0
EZ404U	98	173	221.5	91.0	22	131.0
EZ501U	115	93	147.5	100.0	22	58.5
EZ502U	115	118	172.5	100.0	22	83.5
EZ503U	115	143	197.5	100.0	22	108.5
EZ505U	115	193	247.5	100.0	22	158.5
EZ701U	145	102	161.0	115.0	22	64.0
EZ702U	145	127	186.0	115.0	22	89.0
EZ703U	145	152	211.0	115.0	22	114.0
EZ705U	145	207	266.0	134.0	22	165.0
EZ802U	190	197	274.0	156.5	22	143.0
EZ803U	190	238	315.0	156.5	22	184.0
EZ805U	190	320	397.0	156.5	22	266.0

Dimensions of geared motors

Type	EZ3		EZ4		EZ5		EZ7		EZ8	
	□a6	mp	□a6	mp	□a6	mp	□a6	mp	□a6	mp
P231_KX301_	75	139.5	100	134.0	–	–	–	–	–	–
P331_KX301_	75	139.5	100	134.0	–	–	–	–	–	–
P332_KX301_	75	139.5	–	–	–	–	–	–	–	–
P431_KX401_	100	151.0	100	145.5	115	150.0	140	153.0	–	–
P432_KX301_	75	139.5	100	134.0	–	–	–	–	–	–
P531_KX501_	–	–	120	176.5	120	172.0	140	183.0	–	–
P532_KX401_	100	151.0	100	145.5	115	150.0	–	–	–	–
P731_KX701_	–	–	–	–	150	214.5	150	217.5	190	242.5
P732_KX501_	–	–	120	176.5	120	172.0	140	183.0	–	–
P831_KX701_	–	–	–	–	150	214.5	150	217.5	190	242.5
P832_KX701_	–	–	–	–	150	214.5	150	217.5	190	242.5
P932_KX701_	–	–	–	–	150	214.5	150	217.5	190	242.5

10.3.2 P shaft design (solid shaft with feather key)

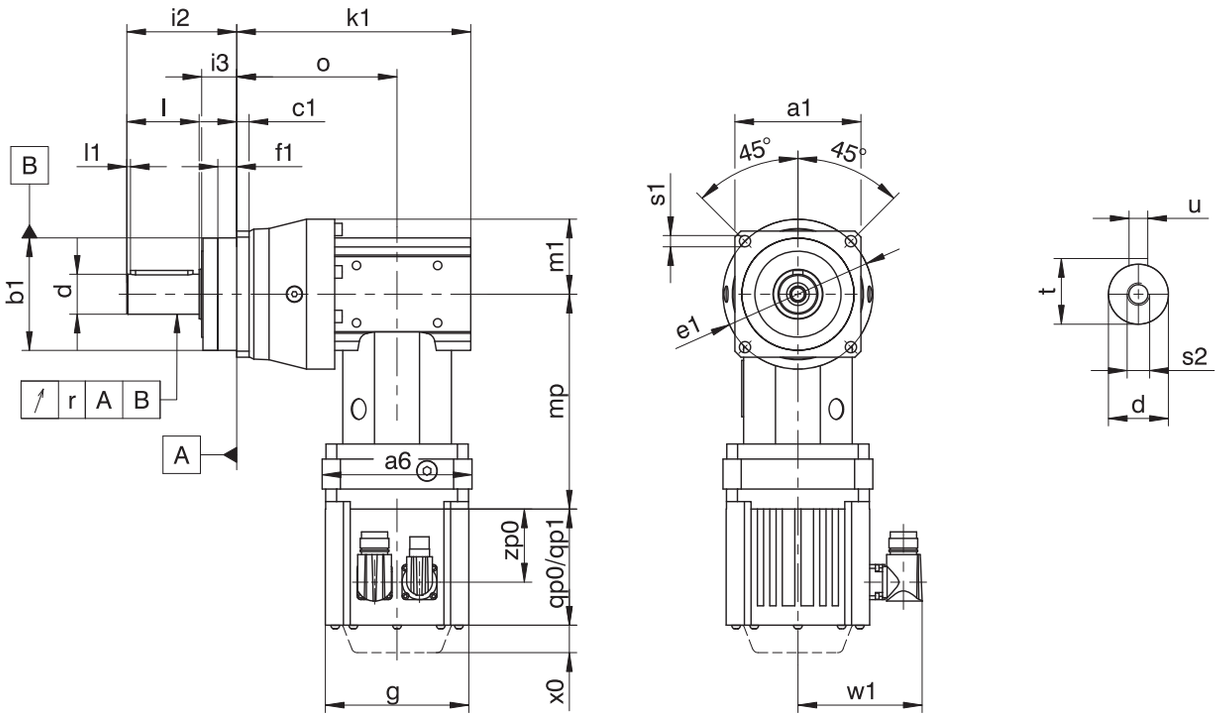

qp0	Applies to motors without brake.	qp1	Applies to motors with brake.
x0	Applies to encoders using an optical measuring method.	w1	Different for the One Cable Solution (OCS), see the chapter [▶ 17.4]
–	The radial runout specification applies only to the reinforced bearing D.		

Dimensions of gear units

Type	□a1	Øb1	c1	Ød	Øe1	f1	i2	i3	k1	l	l1	m1	o	r	Øs1	s2	t	u
P231_KX301_	55	50_{h6}	6	12_{k6}	63	7.0	36	12	124.0	22	2	31	84.0	–	5.5	M4	13.5	A4×4×18
P331_KX301_	72	60_{h6}	7	16_{k6}	75	7.5	48	18	131.0	28	2	36	91.0	0.025	5.5	M5	18.0	A5×5×22
P332_KX301_	72	60_{h6}	7	16_{k6}	75	7.5	48	18	165.5	28	2	36	125.5	0.025	5.5	M5	18.0	A5×5×22
P431_KX401_	76	70_{h6}	9	22_{k6}	85	7.5	56	18	165.0	36	3	49	115.0	0.025	6.6	M8	24.5	A6×6×28
P432_KX301_	76	70_{h6}	9	22_{k6}	85	7.5	56	18	180.0	36	3	49	140.0	0.025	6.6	M8	24.5	A6×6×28
P531_KX501_	101	90_{h6}	10	32_{k6}	120	15.0	88	28	187.5	58	3	57	128.5	0.030	9.0	M12	35.0	A10×8×50
P532_KX401_	101	90_{h6}	10	32_{k6}	120	15.0	88	28	207.0	58	3	57	157.0	0.030	9.0	M12	35.0	A10×8×50
P731_KX701_	144	130_{h6}	15	40_{k6}	165	3.5	112	27	232.5	82	4	72	158.5	0.035	11.0	M16	43.0	A12×8×70
P732_KX501_	144	130_{h6}	15	40_{k6}	165	3.5	112	27	255.5	82	4	72	196.5	0.035	11.0	M16	43.0	A12×8×70
P831_KX701_	190	160_{h6}	15	55_{k6}	215	10.0	112	27	267.0	82	6	95	193.0	0.035	13.5	M20	59.0	A16×10×70
P832_KX701_	190	160_{h6}	15	55_{k6}	215	10.0	112	27	324.5	82	6	95	250.5	0.035	13.5	M20	59.0	A16×10×70
P932_KX701_	212	180_{h6}	17	75_{k6}	250	10.0	143	34	388.0	105	7	112.5	314.0	0.040	17.5	M20	79.5	A20×12×90

Dimensions of motors

Type	□g	qp0	qp1	w1	x0	zp0
EZ301U	72	90	130.0	55.5	21	54.5
EZ302U	72	112	152.0	55.5	21	76.5
EZ303U	72	134	174.0	55.5	21	98.5
EZ401U	98	98	146.5	91.0	22	56.0
EZ402U	98	123	171.5	91.0	22	81.0
EZ404U	98	173	221.5	91.0	22	131.0
EZ501U	115	93	147.5	100.0	22	58.5
EZ502U	115	118	172.5	100.0	22	83.5
EZ503U	115	143	197.5	100.0	22	108.5
EZ505U	115	193	247.5	100.0	22	158.5
EZ701U	145	102	161.0	115.0	22	64.0
EZ702U	145	127	186.0	115.0	22	89.0
EZ703U	145	152	211.0	115.0	22	114.0
EZ705U	145	207	266.0	134.0	22	165.0
EZ802U	190	197	274.0	156.5	22	143.0
EZ803U	190	238	315.0	156.5	22	184.0
EZ805U	190	320	397.0	156.5	22	266.0

Dimensions of geared motors

Type	EZ3		EZ4		EZ5		EZ7		EZ8	
	□a6	mp	□a6	mp	□a6	mp	□a6	mp	□a6	mp
P231_KX301_	75	139.5	100	134.0	–	–	–	–	–	–
P331_KX301_	75	139.5	100	134.0	–	–	–	–	–	–
P332_KX301_	75	139.5	–	–	–	–	–	–	–	–
P431_KX401_	100	151.0	100	145.5	115	150.0	140	153.0	–	–
P432_KX301_	75	139.5	100	134.0	–	–	–	–	–	–
P531_KX501_	–	–	120	176.5	120	172.0	140	183.0	–	–
P532_KX401_	100	151.0	100	145.5	115	150.0	–	–	–	–
P731_KX701_	–	–	–	–	150	214.5	150	217.5	190	242.5
P732_KX501_	–	–	120	176.5	120	172.0	140	183.0	–	–
P831_KX701_	–	–	–	–	150	214.5	150	217.5	190	242.5
P832_KX701_	–	–	–	–	150	214.5	150	217.5	190	242.5
P932_KX701_	–	–	–	–	150	214.5	150	217.5	190	242.5

10.4 Type designation

In this chapter, you can find an explanation of the type designation with the associated options.

Additional ordering information not included in the type designation can be found at the end of the chapter.

Example code

P	7	3	1	S	G	S	S	0050	KX701VF	0030	MF	EZ703U

Explanation

Code	Designation	Design
P	Type	Planetary gear unit
7	Size	7 (example)
3	Generation	Generation 3
1 2	Stages	Single-stage Two-stage
S	Housing	Standard
G P	Shaft	Solid shaft without feather key Solid shaft with feather key
S D Z	Bearing	Standard bearing Axially reinforced bearing (P3 – P9) Radially reinforced bearing (P3 – P9)[1]
S R	Backlash	Standard Reduced
0050	Transmission ratio of output (i x 10)	i = 5 (example)
KX701 **VF**	Input	KX7 right-angle geared motor (example)
0030	Transmission ratio of input (i x 10)	i = 3 (example)
MF	Motor adapter	Motor adapter with FlexiAdapt coupling
EZ703U	Motor	EZ synchronous servo motor

To complete the type designation, also specify the following in your order:

- A detailed type designation of the motor, see the chapter [▸ 17]
- Mounting position, see the chapter [▸ 10.5.3]
- Radial shaft seal rings at the output made of NBR or FKM (option), see the chapter [▸ 10.6.3]
- Position of the plug connectors, see the chapter [▸ 10.5.5]
- Reverse operation of the output shaft from ±20° to ±90° and horizontal installation, note the chapter Reverse operation

[1] Not for reduced-backlash option.

10.4.1 Nameplate

An example geared motor nameplate is explained in the figure below.

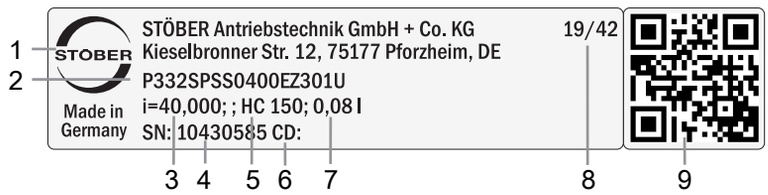

Code	Designation
1	Name of manufacturer
2	Type designation
3	Gear ratio of the gear unit
4	Serial number of the gear unit
5	Lubricant specification
6	Customer-specific data
7	Lubricant fill volume
8	Date of manufacture (year/calendar week)
9	QR code (link to product information)

10.4.1.1 Supporting documents

You can view or download supporting documents for the product by reading off the serial number on the nameplate of the product and entering it at the following address online:
https://id.stober.com

Alternatively, you can use a suitable mobile device to scan in the QR code on the nameplate of the product in order to be linked to the supporting documents.

10.5 Product description

10.5.1 Input options

EZ synchronous servo motor

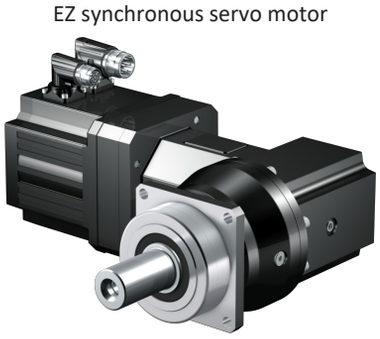

http://www.stoeber.de/en/PKXEZ

LM Lean motor

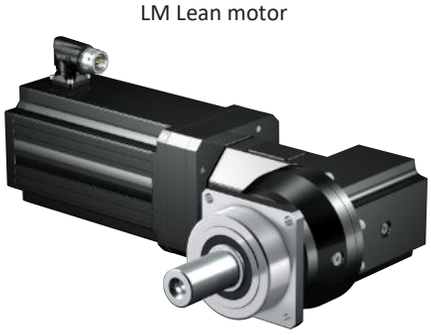

http://www.stoeber.de/en/PKXLM

10.5.2 Installation conditions

The specified torques and forces only apply when gear units are fastened on the machine side using screws of strength class 12.9. In addition, the gear housings must be adjusted at the pilot. The machine-side fit must be H7.

10.5.3 Mounting positions

The following table shows the standard mounting positions.

The numbers identify the gear unit sides. The mounting position is defined by the gear side facing downwards.

EL1	EL2	EL3
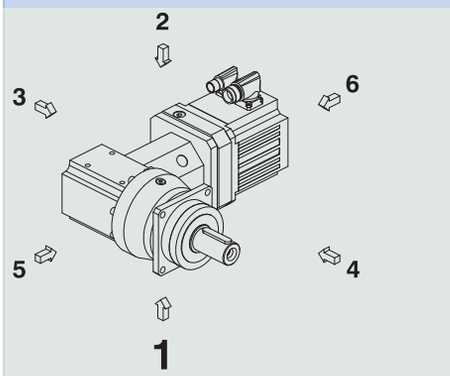	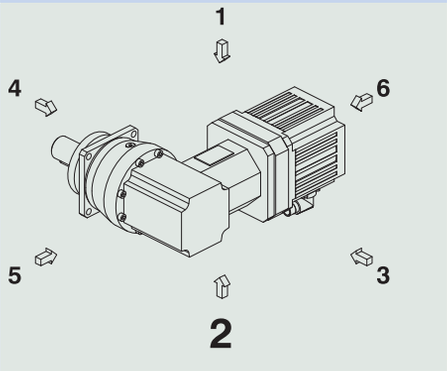	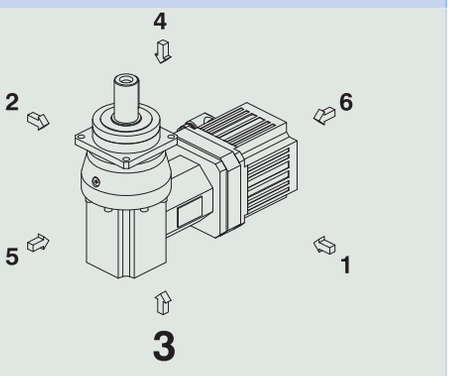
EL4	**EL5**	**EL6**
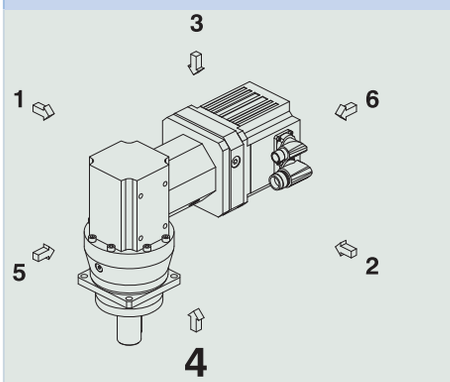	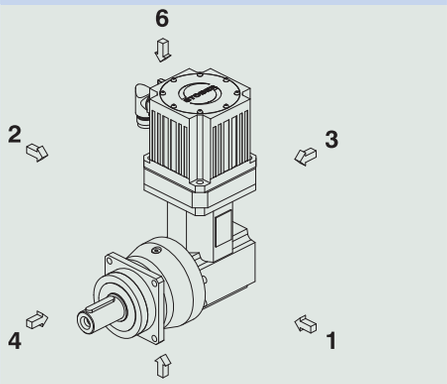	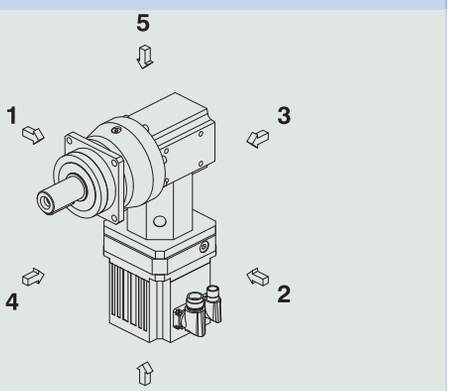

Since the lubricant filling volume of the gear unit depends on the mounting position, the mounting position must be specified when ordering.

10.5.4 Lubricants

STOBER fills the gear units with the amount and type of lubricant specified on the nameplate. The filling volume and the structure of the gear units depend on the mounting position.

Only install the gear units in the intended mounting position! Reposition the gear units only after consulting STOBER. Otherwise, STOBER assumes no liability for the gear units.

You will receive lubricants for use in the food industry upon request.

10.5.5 Position of the plug connectors

Mounting position EL1 Plug connector in 270° position (standard)	Mounting position EL4 Plug connector in 270° position (standard)
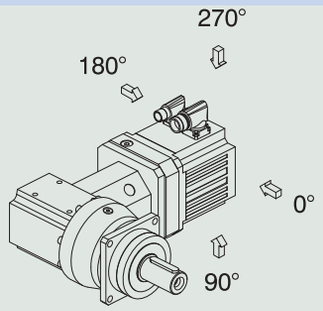	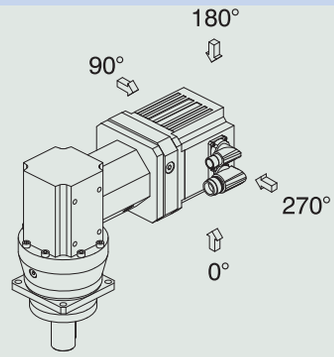

Indicate variations for your geared motor in the order.

Note that the plug connector position rotates along with the geared motor if the geared motor is in another mounting position.

10.5.6 Other product features

Feature	Value
Max. permitted gear unit temperature (on the surface of the gear unit)	≤ 90 °C
Paint	Black RAL 9005
Explosion-proof design in accordance with (ATEX) Directive 2014/34/EU (optional)	Not available
Efficiency: η_{get} two-stage η_{get} three-stage	 96% 94%
Protection class:[2] Gear unit Motor	 IP65 IP56, optionally IP66

10.5.7 Direction of rotation

P_KX3 – P_KX5_	P_KX7
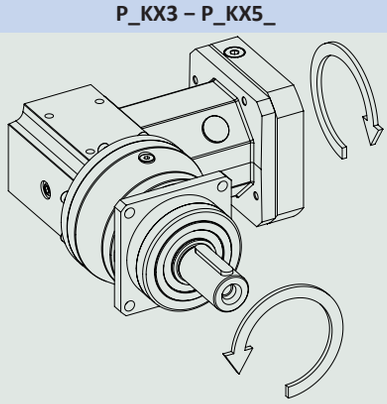	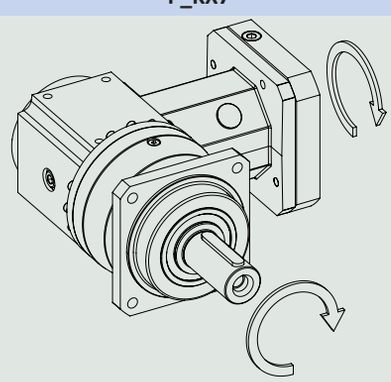

The pictures show mounting position EL1.

10.6 Project configuration

Project your drives using our SERVOsoft designing software. Download SERVOsoft for free at https://www.stoeber.de/en/ServoSoft.

Observe the limit conditions in this chapter to ensure a safe design for your drives.

An explanation of the formula symbols can be found in Chapter [▸ 23.1].

The formula symbols for values actually present in the application are marked with *.

[2] Observe the protection class of all the components.

10.6.1 Calculation of the operating point

Check the following conditions for operating points other than the nominal point M_{2N} specified in the selection tables.

For mounting positions EL1, EL2, EL5, EL6:

$$n_{1m*} \leq \frac{n_{1maxDBEL1,2,5,6}}{fB_T}$$

For mounting positions EL3, EL4:

$$n_{1m*} \leq \frac{n_{1maxDBEL3,4}}{fB_T}$$

$$n_{1max*} \leq \frac{n_{1max\,ZB}}{fB_T}$$

$$M_{2eff*} \leq M_{2th}$$

$$M_{2acc*} \leq \frac{M_{2acc}}{fB_{ZB}}$$

$$M_{2NOT*} \leq M_{2NOT}$$

$$M_{2eq*} \leq M_{2N} \cdot \frac{S}{fB_{op} \cdot fB_t}$$

Refer to the selection tables for the values for $n_{1maxDBEL1,2,5,6}$ $n_{1maxDBEL3,4}$, n_{1maxZB}, M_{2acc} (M_{2accHT} for reduced backlash), M_{2NOT}, M_{2N} and S.

The values for fB_T, fB_{op}, fB_t and fB_{ZB} can be found in the corresponding tables in this chapter.

Calculate the thermal limit torque M_{2th} for a duty cycle > 50%.

Example of cyclic operation

The following calculations are based on a representation of the power taken from the output based in accordance with the following example:

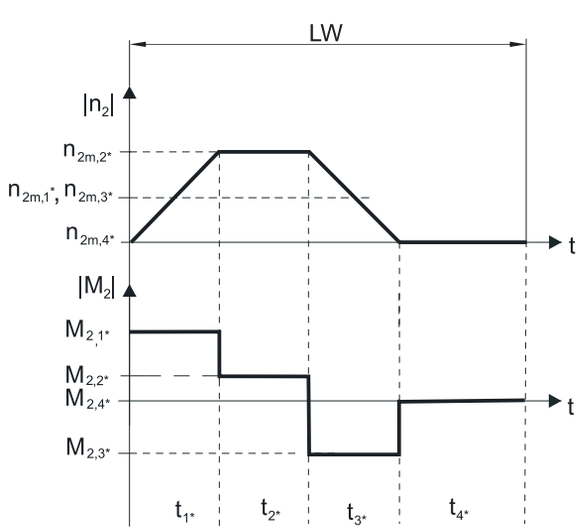

Calculation of the actual average input speed

$$n_{1m*} = n_{2m*} \cdot i$$

$$n_{2m*} = \frac{|n_{2m,1*}| \cdot t_{1*} + \ldots + |n_{2m,n*}| \cdot t_{n*}}{t_{1*} + \ldots + t_{n*}}$$

If $t_{1*} + \ldots + t_{3*} \geq 6$ min, calculate n_{2m*} without the rest phase t_{4*}.

The values for the ratio i can be found in the selection tables.

Calculation of the actual effective torque

$$M_{2eff*} = \sqrt{\frac{t_{1*} \cdot M_{2,1*}^{2} + \ldots + t_{n*} \cdot M_{2,n*}^{2}}{t_{1*} + \ldots + t_{n*}}}$$

Calculation of the actual equivalent torque

$$M_{2eq*} = \sqrt[3]{\frac{\left|n_{2m,1*}\right| \cdot t_{1*} \cdot \left|M_{2,1*}^{3}\right| + \ldots + \left|n_{2m,n*}\right| \cdot t_{n*} \cdot \left|M_{2,n*}^{3}\right|}{\left|n_{2m,1*}\right| \cdot t_{1*} + \ldots + \left|n_{2m,n*}\right| \cdot t_{n*}}}$$

Calculation of the thermal limit torque

Calculate the thermal limit torque M_{2th} for a duty cycle ED_{10} > 50% and the actual average input speed n_{1m*}. (At $K_{mot,th} \leq 0$ you must reduce the average input speed n_{1m*} accordingly or select another geared motor size.)

$$M_{2th} = M_{op} \cdot i \cdot K_{mot,th}$$

$$K_{mot,th} = 0{,}9 - \frac{a_{th}}{1000} \cdot athEL \cdot fB_T \cdot \left(\frac{n_{1m*}}{1000}\right)^3$$

The values for i and a_{th} can be found in the selection tables.

The values for a_{thEL} and fB_T can be found in the corresponding tables in this chapter.

The value for the torque of the motor at operating point M_{op} with the determined average input speed n_{1m*} can be found in the motor curve of Chapter [▶ 17.3]. Note the size, nominal speed n_N and cooling type of the motor. The figure below shows an example of reading the torque M_{op} of a motor with convection cooling at the operating point.

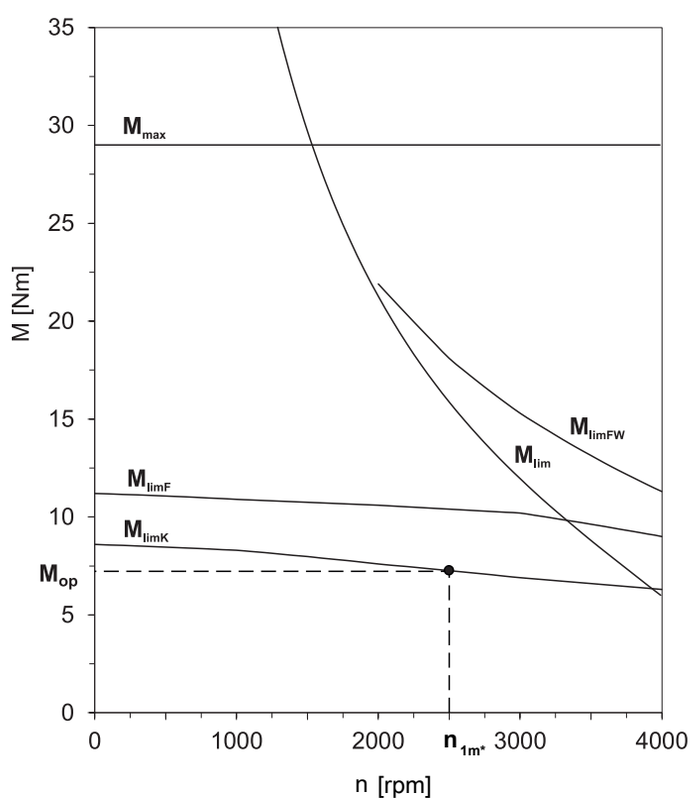

Operating factors

Parameter a_{thEL}

Mounting position	a_{thEL}
EL1, 2, 5, 6	1.0
EL3, 4	1.1

Operating mode	fB_{op}
Uniform continuous operation	1.00
Cyclic operation	1.25
Reversing load cyclic operation	1.40

Run time	fB_t
Daily runtime ≤ 8 h	1.00
Daily runtime ≤ 16 h	1.15
Daily runtime ≤ 24 h	1.20

Cyclic operation	fB_{ZB}
≤ 1000 load changes/hour (LW/h)	1.00
> 1000 load changes/hour (LW/h)	1.15

Temperature		fB_T
Motor cooling	**Surrounding temperature**	
Motor with forced ventilation	≤ 20 °C	0.9
	≤ 30 °C	1.0
	≤ 40 °C	1.15
Motor with convection cooling	≤ 20 °C	1.0
	≤ 30 °C	1.1
	≤ 40 °C	1.25

Notes

- The maximum permitted gear unit temperature (see the "Other product features" chapter) must not be exceeded. Doing so may result in damage to the geared motor.
- For braking from full speed (for example when the power fails or when setting up the machine), note the permitted gear unit torques (M_{2acc}, M_{2NOT}) in the selection tables.

10.6.2 Permitted shaft loads for the output shaft

The values specified in the tables apply to the permitted shaft loads:

- For shaft dimensions in accordance with the catalog
- For output speeds n_{2m*} ≤ 100 rpm ($F^{2axN} = F_{2ax100}$; $F_{2radN} = F_{2rad100}$; $M_{2kN} = M_{2k100}$)
- Only if radial forces on the gear unit are stabilized by its pilots (housing, flange shaft)

Permitted shaft loads for standard bearing S

Type	z_2 [mm]	F_{2ax100} [N]	$F_{2rad100}$ [N]	$F_{2rad,acc}$ [N]	M_{2k100} [Nm]	$M_{2k,acc}$ [Nm]
P2	17.0	500	1200	1300	34	36
P3	17.5	1000	2500	2500	79	79
P4	18.5	1500	4000	4500	146	164
P5	19.5	2300	6500	7000	315	340
P7	23.0	2900	8500	9000	544	576
P8	24.5	4700	13000	18000	852	1179
P9	33.0	6000	18000	27000	1539	2309

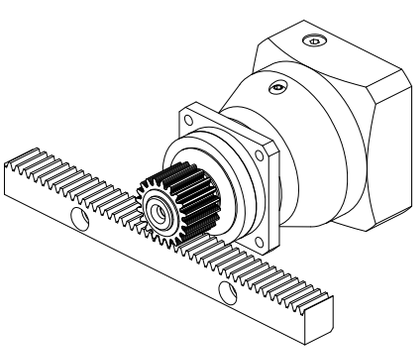

Fig. 1: Recommendation for bearing assignment S (e.g. for straight-cut gearing)

Permitted shaft loads for axially reinforced bearing D

Type	z_2 [mm]	F_{2ax100} [N]	$F_{2rad100}$ [N]	$F_{2rad,acc}$ [N]	M_{2k100} [Nm]	$M_{2k,acc}$ [Nm]
P3	20.0	2500	2750	2750	94	94
P4	22.5	4000	4500	5000	182	203
P5	25.5	6000	7000	8000	382	436
P7	29.0	10000	9500	10000	665	700
P8	32.0	15500	15000	18000	1095	1314
P9	44.0	25000	20000	30000	1930	2895

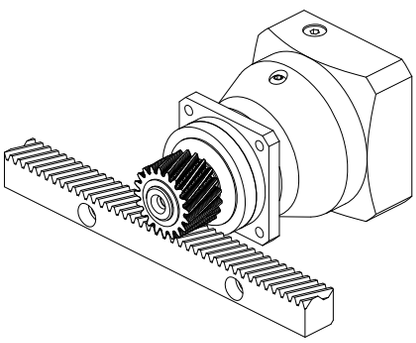

Fig. 2: Recommendation for bearing assignment D (e.g. for helical gearing)

Permitted shaft loads for radially reinforced bearing Z

Type	z_2 [mm]	F_{2ax100} [N]	$F_{2rad100}$ [N]	$F_{2rad,acc}$ [N]	M_{2k100} [Nm]	$M_{2k,acc}$ [Nm]
P3	17.5	600	3000	3000	95	95
P4	18.5	1000	5000	5000	183	183
P5	19.5	1600	8000	8000	388	388
P7	23.0	2000	10000	10000	640	640
P8	24.5	3600	18000	18000	1179	1179
P9	33.0	5000	27000	35000	2309	2993

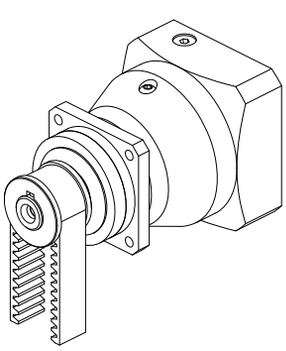

Fig. 3: Recommendation for bearing assignment Z (e.g. for belt drives)

For other output speeds, download diagrams at http://configurator.stoeber.de.

The following applies to output speeds n_{2m*} > 100 rpm:

$$F_{2axN} = \frac{F_{2ax100}}{\sqrt[3]{\frac{n_{2m*}}{100\ \text{rpm}}}} \qquad F_{2radN} = \frac{F_{2rad100}}{\sqrt[3]{\frac{n_{2m*}}{100\ \text{rpm}}}} \qquad M_{2kN} = \frac{M_{2k100}}{\sqrt[3]{\frac{n_{2m*}}{100\ \text{rpm}}}}$$

The values for F_{2ax100}, $F_{2rad100}$ and M_{2k100} can be found in the table "Permitted shaft loads" in this chapter.

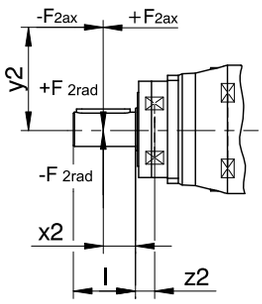

Fig. 4: Force application points

The specified values for $F_{2rad100}$ and $F_{2rad,acc}$ refer to an application of force at the center of the output shaft: $x_2 = l/2$.

Shaft dimensions can be found in the "Dimensional drawings" chapter.

The following applies to other force application points:

$$M_{2k,acc*} = \frac{2 \cdot F_{2ax*} \cdot y_2 + F_{2rad,acc*} \cdot (x_2 + z_2)}{1000} \leq M_{2k,acc}$$

$$F_{2rad,acc*} \leq F_{2rad,acc}$$

$$F_{2ax*} \leq F_{2axN}$$

The values for $F_{2rad,acc}$ and $M_{2k,acc}$ can be found in the table "Permitted shaft loads" in this chapter.

For applications with multiple axial and/or radial forces, you must add the forces as vectors.

In the event of EMERGENCY OFF operation (max. 1000 load changes), you can multiply the permitted forces and torques for F_{2ax100}, $F_{2rad100}$ and M_{2k100} by a factor of two.

Also note the calculation for equivalent values:

$$M_{2k,eq*} = \sqrt[3]{\frac{|n_{2m,1*}| \cdot t_{1*} \cdot |M_{2k,acc,1*}{}^3| + \ldots + |n_{2m,n*}| \cdot t_{n*} \cdot |M_{2k,acc,n*}{}^3|}{|n_{2m,1*}| \cdot t_{1*} + \ldots + |n_{2m,n*}| \cdot t_{n*}}} \leq M_{2kN}$$

$$F_{2rad,eq*} = \sqrt[3]{\frac{|n_{2m,1*}| \cdot t_{1*} \cdot |F_{2rad,acc,1*}{}^3| + \ldots + |n_{2m,n*}| \cdot t_{n*} \cdot |F_{2rad,acc,n*}{}^3|}{|n_{2m,1*}| \cdot t_{1*} + \ldots + |n_{2m,n*}| \cdot t_{n*}}} \leq F_{2radN}$$

The following apply to the bearing service life L_{10h} ($ED_{10} \leq 40\%$):

$L_{10h} > 10000$ h with $1 < M_{2kN}/M_{2k*} < 1.25$

$L_{10h} > 20000$ h with $1.25 < M_{2kN}/M_{2k*} < 1.5$

$L_{10h} > 30000$ h with $1.5 < M_{2kN}/M_{2k*}$

For different duty cycles:

$$L_{10h} > L_{10h(ED_{10}=40\%)} \cdot \frac{40\%}{ED_{10}}$$

10.6.3 Recommendation for radial shaft seal rings

For a duty cycle > 60% and higher surrounding temperatures, we recommend radial shaft seal rings made of FKM at the output.

Properties:

- Excellent temperature resistance
- High chemical stability
- Very good resistance to aging
- Excellent resistance in oils and greases
- For use in the food, beverage and pharmaceutical industries

Leak-proofness

Our gear units are equipped with high-quality radial shaft seal rings and checked for leaks. However, a leak cannot be fully ruled out over the length of use of a gear unit. If you use a gear unit with goods incompatible with the lubricant, you must take measures to prevent direct contact with the gear unit lubricant in case of a leak.

10.6.4 Reverse operation

To ensure lubrication for circulating gearing parts during cyclic reverse operation from ± 20° to ± 90° at the output, pay careful attention to the position of the output shaft for the horizontal mounting of the gear unit, as shown in the diagrams below. The images show the center position of reverse operation. Cyclic reverse operation ≤ ± 20° on request.

Solid shaft without feather key	Solid shaft with feather key
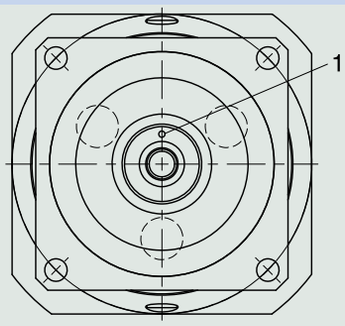	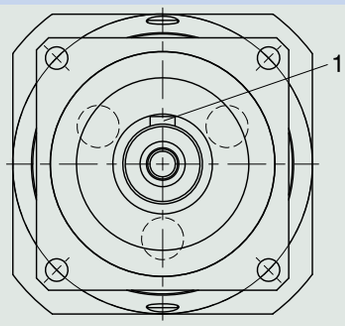
1 Position of the mark: top	1 Position of the feather key: top

Notes

- If you use the solid shaft without a feather key (G), you must note the position of the mark during assembly.
- As an alternative, you can use the solid shaft with a feather key (P). In that case, the feather key functions for position orientation. For a backlash-free connection, also use a clamp.

10.7 Additional documentation

Additional documentation related to the product can be found at
http://www.stoeber.de/en/downloads/

Enter the ID of the documentation in the Search... field.

Documentation	ID
Operating manual for KL/KS/PHK/PHKX/PHQK/PK/PKX right-angle servo gear units and right-angle servo geared motors	443150_en

11 PK right-angle planetary geared motors

Table of contents

11.1 Overview ... 274

11.2 Selection tables ... 275

11.3 Dimensional drawings ... 291

11.3.1 G shaft design (solid shaft without feather key) ... 292

11.3.2 P shaft design (solid shaft with feather key) ... 294

11.4 Type designation ... 295

11.4.1 Nameplate ... 296

11.5 Product description ... 296

11.5.1 Input options ... 296

11.5.2 Installation conditions ... 296

11.5.3 Mounting positions ... 297

11.5.4 Lubricants ... 297

11.5.5 Position of the plug connectors ... 298

11.5.6 Other product features ... 298

11.5.7 Direction of rotation ... 298

11.6 Project configuration ... 298

11.6.1 Calculation of the operating point ... 299

11.6.2 Permitted shaft loads for the output shaft ... 301

11.6.3 Recommendation for radial shaft seal rings ... 303

11.6.4 Reverse operation ... 304

11.7 Additional documentation ... 304

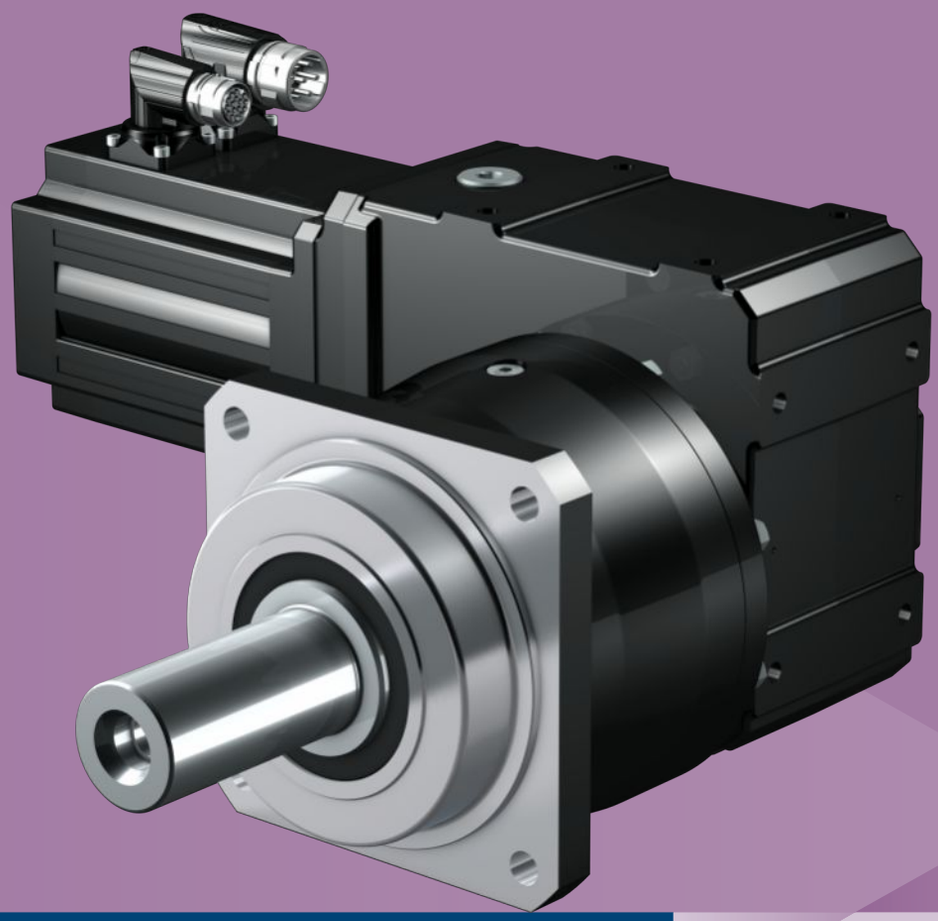

11

Right-angle planetary geared motors

PK

11.1 Overview

Helical-geared precision right-angle planetary geared motors

Features

Power density	★★★☆☆
Backlash	★★★★★
Price category	€€€
Shaft load	★★★★☆
Smooth operation	★★★☆☆
Torsional stiffness	★★★☆☆
Mass moment of inertia	★★★★★
Helical gearing	✓
Maintenance-free	✓
Continuous operation without cooling	✓
Reinforced output bearing	✓ (optional)
Compact and highly dynamic due to direct motor attachment	✓

Key ★☆☆☆☆ good | ★★★★★ excellent
€ Economy | €€€€€ Premium

Technical data

i	12 – 555
M_{2acc}	68 – 3105 Nm
$\Delta\phi_2$	1.5 – 5 arcmin
η_{get}	94 %

11.2 Selection tables

The technical data specified in the selection tables applies to:

- Installation altitudes up to 1000 m above sea level
- Surrounding temperatures from 0 °C to 40 °C
- Drives with convection-cooled motors (e.g. EZ401**U**)
- M_{2acc}, M_{2accHT}: Solid shaft design without feather key (we generally recommend this shaft design for cyclic operation)

For the technical data on drives with forced ventilated motors (e.g. EZ401**B**), refer to http://configurator.stoeber.de.

An explanation of the formula symbols can be found in Chapter [▶ 23.1].

n_{2N} [rpm]	M_{2N} [Nm]	$M_{2,0}$ [Nm]	a_{th}	S	Type	M_{2acc} [Nm]	M_{2accHT} [Nm]	M_{2NOT} [Nm]	i	i_{exakt}	n_{1maxDB} EL1,2 [rpm]	n_{1maxDB} EL3,4,5,6 [rpm]	n_{1maxZB} [rpm]	J_1 [kgcm²]	$\Delta\varphi_2$ [arcmin]	$\Delta\varphi_{2red}$ [arcmin]	C_2 [Nm/arcmin]	m [kg]
P531K (n_{1N} = 3000 rpm, $M_{2acc,max}$ = 350 Nm)																		
13	205	210	12	1.1	P531_0050K102_0470 EZ301U	350	390	700	234.6	11495/49	4000	4000	7000	0.22	4.0	2.0	29	17
17	154	157	11	1.4	P531_0050K102_0350 EZ301U	350	390	700	175.5	3686/21	4000	4000	7000	0.23	4.0	2.0	29	17
21	123	125	10	1.8	P531_0050K102_0280 EZ301U	350	370	700	140.2	2945/21	4000	4000	7000	0.26	4.0	2.0	29	17
21	210	222	18	1.0	P531_0050K102_0280 EZ302U	350	390	700	140.2	2945/21	4000	4000	7000	0.36	4.0	2.0	29	17
26	102	104	9.8	2.2	P531_0050K102_0230 EZ301U	310	310	700	116.3	5700/49	4000	4000	7000	0.28	4.0	2.0	29	17
26	174	184	17	1.3	P531_0050K102_0230 EZ302U	350	390	700	116.3	5700/49	4000	4000	7000	0.38	4.0	2.0	29	17
34	77	78	9.2	2.9	P531_0050K102_0175 EZ301U	230	230	660	87.82	10450/119	4000	3800	6000	0.32	4.0	2.0	29	17
34	131	139	16	1.7	P531_0050K102_0175 EZ302U	350	390	660	87.82	10450/119	4000	3800	6000	0.42	4.0	2.0	29	17
34	171	181	20	1.3	P531_0050K102_0175 EZ303U	350	390	660	87.82	10450/119	4000	3800	6000	0.53	4.0	2.0	29	18
43	62	63	8.7	3.6	P531_0050K102_0140 EZ301U	190	190	530	70.57	494/7	4000	3800	6000	0.37	4.0	2.0	29	17
43	106	112	15	2.1	P531_0050K102_0140 EZ302U	330	330	530	70.57	494/7	4000	3800	6000	0.47	4.0	2.0	29	17
43	137	145	19	1.6	P531_0050K102_0140 EZ303U	350	390	530	70.57	494/7	4000	3800	6000	0.58	4.0	2.0	29	18
43	186	199	26	1.2	P531_0050K102_0140 EZ401U	350	390	700	70.57	494/7	4000	3800	6000	1.1	4.0	2.0	29	19
52	51	52	8.3	4.3	P531_0050K102_0115 EZ301U	150	150	430	57.83	1330/23	3600	3300	5500	0.43	4.0	2.0	29	17
52	87	91	14	2.5	P531_0050K102_0115 EZ302U	270	270	430	57.83	1330/23	3600	3300	5500	0.53	4.0	2.0	29	17
52	113	119	18	2.0	P531_0050K102_0115 EZ303U	330	330	430	57.83	1330/23	3600	3300	5500	0.64	4.0	2.0	29	18
52	152	163	25	1.4	P531_0050K102_0115 EZ401U	350	390	700	57.83	1330/23	3600	3300	5500	1.2	4.0	2.0	29	19
65	69	73	13	3.2	P531_0050K102_0092 EZ302U	220	220	350	46.25	8740/189	3600	3300	5500	0.62	4.0	2.0	29	17
65	90	95	17	2.4	P531_0050K102_0092 EZ303U	260	260	350	46.25	8740/189	3600	3300	5500	0.73	4.0	2.0	29	18
65	122	131	23	1.8	P531_0050K102_0092 EZ401U	350	370	700	46.25	8740/189	3600	3300	5500	1.3	4.0	2.0	29	19
65	187	205	36	1.2	P531_0050K102_0092 EZ501U	350	390	700	46.25	8740/189	3600	3300	5500	3.2	4.0	2.0	29	20
65	205	226	39	1.1	P531_0050K102_0092 EZ402U	350	390	700	46.25	8740/189	3600	3300	5500	2.0	4.0	2.0	29	20
72	62	66	13	3.5	P531_0050K102_0083 EZ302U	200	200	310	41.55	1911/46	3600	3300	5500	0.59	4.0	2.0	29	17
72	81	86	17	2.7	P531_0050K102_0083 EZ303U	230	230	310	41.55	1911/46	3600	3300	5500	0.70	4.0	2.0	29	18
72	109	117	23	2.0	P531_0050K102_0083 EZ401U	330	330	700	41.55	1911/46	3600	3300	5500	1.2	4.0	2.0	29	19
72	168	184	35	1.3	P531_0050K102_0083 EZ501U	350	390	700	41.55	1911/46	3600	3300	5500	3.2	4.0	2.0	29	20
72	184	203	38	1.2	P531_0050K102_0083 EZ402U	350	390	700	41.55	1911/46	3600	3300	5500	1.9	4.0	2.0	29	20
90	50	53	14	3.8	P531_0050K102_0066 EZ302U	160	160	250	33.22	299/9	3600	3300	5500	0.71	4.0	2.0	29	17
90	65	68	19	2.9	P531_0050K102_0066 EZ303U	190	190	250	33.22	299/9	3600	3300	5500	0.82	4.0	2.0	29	18
90	88	94	22	2.5	P531_0050K102_0066 EZ401U	270	270	700	33.22	299/9	3600	3300	5500	1.3	4.0	2.0	29	19
90	134	147	33	1.6	P531_0050K102_0066 EZ501U	350	390	700	33.22	299/9	3600	3300	5500	3.3	4.0	2.0	29	20
90	147	163	36	1.5	P531_0050K102_0066 EZ402U	350	390	700	33.22	299/9	3600	3300	5500	2.0	4.0	2.0	29	20
90	216	269	53	1.0	P531_0050K102_0066 EZ404U	350	390	700	33.22	299/9	3600	3300	5500	3.4	4.0	2.0	29	22
100	79	85	21	2.8	P531_0050K102_0060 EZ401U	240	240	700	30.00	30/1	3300	2800	5000	1.4	4.0	2.0	29	19
100	121	133	32	1.8	P531_0050K102_0060 EZ501U	350	390	700	30.00	30/1	3300	2800	5000	3.4	4.0	2.0	29	20
100	133	147	35	1.7	P531_0050K102_0060 EZ402U	350	390	700	30.00	30/1	3300	2800	5000	2.1	4.0	2.0	29	20
100	195	243	52	1.1	P531_0050K102_0060 EZ404U	350	390	700	30.00	30/1	3300	2800	5000	3.5	4.0	2.0	29	22
100	209	226	56	1.1	P531_0050K102_0060 EZ502U	350	390	700	30.00	30/1	3300	2800	5000	5.7	4.0	2.0	29	22
100	209	234	56	1.1	P531_0050K102_0060 EZ701U	350	390	700	30.00	30/1	3300	2800	5000	9.0	4.0	2.0	29	23
108	42	44	16	3.8	P531_0050K102_0056 EZ302U	130	130	210	27.84	7600/273	3300	2800	5000	0.97	4.0	2.0	29	17
108	54	57	21	2.9	P531_0050K102_0056 EZ303U	160	160	210	27.84	7600/273	3300	2800	5000	1.1	4.0	2.0	29	18
108	73	79	21	3.0	P531_0050K102_0056 EZ401U	220	220	700	27.84	7600/273	3300	2800	5000	1.6	4.0	2.0	29	19
108	113	123	32	2.0	P531_0050K102_0056 EZ501U	350	390	700	27.84	7600/273	3300	2800	5000	3.6	4.0	2.0	29	20
108	123	136	35	1.8	P531_0050K102_0056 EZ402U	350	390	700	27.84	7600/273	3300	2800	5000	2.3	4.0	2.0	29	20
108	181	225	51	1.2	P531_0050K102_0056 EZ404U	350	390	700	27.84	7600/273	3300	2800	5000	3.7	4.0	2.0	29	22
108	194	210	55	1.1	P531_0050K102_0056 EZ502U	350	390	700	27.84	7600/273	3300	2800	5000	5.9	4.0	2.0	29	22
108	194	217	55	1.1	P531_0050K102_0056 EZ701U	350	390	700	27.84	7600/273	3300	2800	5000	9.2	4.0	2.0	29	23
150	39	41	27	2.9	P531_0050K102_0040 EZ303U	110	110	150	20.00	20/1	3300	2800	5000	1.3	4.0	2.0	29	18
150	53	56	19	4.2	P531_0050K102_0040 EZ401U	160	160	600	20.00	20/1	3300	2800	5000	1.8	4.0	2.0	29	19
150	81	88	29	2.7	P531_0050K102_0040 EZ501U	300	300	600	20.00	20/1	3300	2800	5000	3.8	4.0	2.0	29	20

n_{2N} [rpm]	M_{2N} [Nm]	$M_{2,0}$ [Nm]	a_{th}	S	Type	M_{2acc} [Nm]	M_{2accHT} [Nm]	M_{2NOT} [Nm]	i	i_{exakt}	n_{1maxDB} EL1,2 [rpm]	n_{1maxDB} EL3,4,5,6 [rpm]	n_{1maxZB} [rpm]	J_1 [kgcm²]	$\Delta\varphi_2$ [arcmin]	$\Delta\varphi_{2red}$ [arcmin]	C_2 [Nm/arcmin]	m [kg]
P531K (n_{1N} = 3000 rpm, $M_{2acc,max}$ = 350 Nm)																		
150	88	98	32	2.5	P531_0050K102_0040 EZ402U	300	300	600	20.00	20/1	3300	2800	5000	2.5	4.0	2.0	29	20
150	130	162	47	1.7	P531_0050K102_0040 EZ404U	350	390	600	20.00	20/1	3300	2800	5000	3.9	4.0	2.0	29	22
150	139	151	50	1.6	P531_0050K102_0040 EZ502U	350	390	600	20.00	20/1	3300	2800	5000	6.1	4.0	2.0	29	22
150	139	156	50	1.6	P531_0050K102_0040 EZ701U	350	380	600	20.00	20/1	3300	2800	5000	9.4	4.0	2.0	29	23
150	183	209	66	1.2	P531_0050K102_0040 EZ503U	350	390	600	20.00	20/1	3300	2800	5000	8.5	4.0	2.0	29	23
188	31	33	27	2.9	P531_0040K102_0040 EZ303U	90	90	120	16.00	16/1	3300	2800	5000	1.3	4.5	2.5	27	18
188	42	45	17	4.8	P531_0040K102_0040 EZ401U	130	130	480	16.00	16/1	3300	2800	5000	1.9	4.5	2.5	27	19
188	65	71	26	3.1	P531_0040K102_0040 EZ501U	240	240	480	16.00	16/1	3300	2800	5000	3.8	4.5	2.5	27	20
188	71	78	28	2.8	P531_0040K102_0040 EZ402U	240	240	480	16.00	16/1	3300	2800	5000	2.6	4.5	2.5	27	20
188	104	129	41	1.9	P531_0040K102_0040 EZ404U	300	320	480	16.00	16/1	3300	2800	5000	3.9	4.5	2.5	27	22
188	111	120	44	1.8	P531_0040K102_0040 EZ502U	300	320	480	16.00	16/1	3300	2800	5000	6.1	4.5	2.5	27	22
188	111	125	44	1.8	P531_0040K102_0040 EZ701U	300	300	480	16.00	16/1	3300	2800	5000	9.4	4.5	2.5	27	23
188	146	167	58	1.4	P531_0040K102_0040 EZ503U	300	320	480	16.00	16/1	3300	2800	5000	8.5	4.5	2.5	27	23
250	23	25	27	2.9	P531_0030K102_0040 EZ303U	68	68	90	12.00	12/1	3300	2800	5000	1.4	5.0	3.0	22	18
250	32	34	21	3.8	P531_0030K102_0040 EZ401U	96	96	360	12.00	12/1	3300	2800	5000	2.0	5.0	3.0	22	19
250	49	53	32	2.5	P531_0030K102_0040 EZ501U	180	180	360	12.00	12/1	3300	2800	5000	3.9	5.0	3.0	22	20
250	53	59	35	2.3	P531_0030K102_0040 EZ402U	180	180	360	12.00	12/1	3300	2800	5000	2.7	5.0	3.0	22	20
250	78	97	52	1.5	P531_0030K102_0040 EZ404U	200	200	360	12.00	12/1	3300	2800	5000	4.0	5.0	3.0	22	22
250	84	90	55	1.4	P531_0030K102_0040 EZ502U	200	200	360	12.00	12/1	3300	2800	5000	6.2	5.0	3.0	22	22
250	84	94	55	1.4	P531_0030K102_0040 EZ701U	200	200	360	12.00	12/1	3300	2800	5000	9.5	5.0	3.0	22	23
250	110	125	73	1.1	P531_0030K102_0040 EZ503U	200	200	360	12.00	12/1	3300	2800	5000	8.6	5.0	3.0	22	23
P531K (n_{1N} = 6000 rpm, $M_{2acc,max}$ = 350 Nm)																		
26	196	210	11	1.1	P531_0050K102_0470 EZ301U	350	390	700	234.6	11495/49	4000	4000	7000	0.22	4.0	2.0	29	17
34	147	157	10	1.5	P531_0050K102_0350 EZ301U	350	390	700	175.5	3686/21	4000	4000	7000	0.23	4.0	2.0	29	17
43	117	125	9.9	1.9	P531_0050K102_0280 EZ301U	350	370	700	140.2	2945/21	4000	4000	7000	0.26	4.0	2.0	29	17
43	198	222	17	1.1	P531_0050K102_0280 EZ302U	350	390	700	140.2	2945/21	4000	4000	7000	0.36	4.0	2.0	29	17
52	97	104	9.4	2.3	P531_0050K102_0230 EZ301U	310	310	700	116.3	5700/49	4000	4000	7000	0.28	4.0	2.0	29	17
52	164	184	16	1.3	P531_0050K102_0230 EZ302U	350	390	700	116.3	5700/49	4000	4000	7000	0.38	4.0	2.0	29	17
52	215	246	21	1.0	P531_0050K102_0230 EZ303U	350	390	700	116.3	5700/49	4000	4000	7000	0.49	4.0	2.0	29	18
68	74	78	8.8	3.0	P531_0050K102_0175 EZ301U	230	230	660	87.82	10450/119	4000	3800	6000	0.32	4.0	2.0	29	17
68	124	139	15	1.8	P531_0050K102_0175 EZ302U	350	390	660	87.82	10450/119	4000	3800	6000	0.42	4.0	2.0	29	17
68	162	186	19	1.4	P531_0050K102_0175 EZ303U	350	390	660	87.82	10450/119	4000	3800	6000	0.53	4.0	2.0	29	18
68	190	231	23	1.2	P531_0050K102_0175 EZ401U	350	390	700	87.82	10450/119	4000	3800	6000	1.1	4.0	2.0	29	19
85	59	63	8.3	3.7	P531_0050K102_0140 EZ301U	190	190	530	70.57	494/7	4000	3800	6000	0.37	4.0	2.0	29	17
85	100	112	14	2.2	P531_0050K102_0140 EZ302U	330	330	530	70.57	494/7	4000	3800	6000	0.47	4.0	2.0	29	17
85	130	149	18	1.7	P531_0050K102_0140 EZ303U	350	390	530	70.57	494/7	4000	3800	6000	0.58	4.0	2.0	29	18
85	153	186	21	1.4	P531_0050K102_0140 EZ401U	350	390	700	70.57	494/7	4000	3800	6000	1.1	4.0	2.0	29	19
P731K (n_{1N} = 3000 rpm, $M_{2acc,max}$ = 810 Nm)																		
7.6	344	351	8.6	1.3	P731_0070K102_0560 EZ301U	700	700	1230	392.7	1178/3	4000	4000	7000	0.21	4.0	2.0	52	23
8.5	307	314	14	1.1	P731_0100K102_0350 EZ301U	580	580	1150	351.1	7372/21	4000	4000	7000	0.23	3.5	1.5	50	23
9.1	287	294	8.2	1.5	P731_0070K102_0470 EZ301U	810	830	1470	328.4	2299/7	4000	4000	7000	0.22	4.0	2.0	52	23
11	247	252	8.3	1.7	P731_0070K102_0400 EZ301U	500	500	890	282.1	2821/10	4000	4000	7000	0.21	4.0	2.0	52	23
11	245	251	13	1.4	P731_0100K102_0280 EZ301U	580	580	1150	280.5	5890/21	4000	4000	7000	0.26	3.5	1.5	50	23
11	415	439	12	1.1	P731_0050K202_0560 EZ302U	810	840	1400	277.7	6665/24	4000	3900	6500	0.34	4.0	2.0	53	31
12	215	220	7.6	2.0	P731_0070K102_0350 EZ301U	650	650	1410	245.7	3686/15	4000	4000	7000	0.23	4.0	2.0	52	23
12	368	388	13	1.2	P731_0070K102_0350 EZ302U	810	840	1410	245.7	3686/15	4000	4000	7000	0.33	4.0	2.0	52	24
13	206	211	7.5	2.1	P731_0070K102_0340 EZ301U	590	590	1050	235.9	4719/20	4000	4000	7000	0.22	4.0	2.0	52	23
13	353	373	13	1.2	P731_0070K102_0340 EZ302U	590	590	1050	235.9	4719/20	4000	4000	7000	0.32	4.0	2.0	52	24
13	204	208	12	1.7	P731_0100K102_0230 EZ301U	580	580	1150	232.7	11400/49	4000	4000	7000	0.28	3.5	1.5	50	23
13	348	368	21	1.0	P731_0100K102_0230 EZ302U	580	580	1150	232.7	11400/49	4000	4000	7000	0.38	3.5	1.5	50	24
13	346	365	11	1.3	P731_0050K202_0460 EZ302U	810	840	1330	231.1	1849/8	4000	3900	6500	0.36	4.0	2.0	53	31
15	172	175	7.2	2.6	P731_0070K102_0280 EZ301U	520	520	1220	196.3	589/3	4000	4000	7000	0.26	4.0	2.0	52	23
15	294	310	12	1.5	P731_0070K102_0280 EZ302U	810	840	1220	196.3	589/3	4000	4000	7000	0.36	4.0	2.0	52	24
15	382	405	16	1.2	P731_0070K102_0280 EZ303U	810	840	1220	196.3	589/3	4000	4000	7000	0.47	4.0	2.0	52	24
17	154	158	7.0	2.8	P731_0070K102_0250 EZ301U	470	470	1020	176.5	8827/50	4000	4000	7000	0.24	4.0	2.0	52	23
17	264	279	12	1.7	P731_0070K102_0250 EZ302U	760	760	1020	176.5	8827/50	4000	4000	7000	0.34	4.0	2.0	52	24
17	344	364	16	1.3	P731_0070K102_0250 EZ303U	760	760	1020	176.5	8827/50	4000	4000	7000	0.45	4.0	2.0	52	24
17	258	273	10	1.7	P731_0050K202_0350 EZ302U	810	810	1100	172.8	9675/56	4000	3900	6500	0.41	4.0	2.0	53	31
17	336	356	13	1.3	P731_0050K202_0350 EZ303U	810	830	1100	172.8	9675/56	4000	3900	6500	0.52	4.0	2.0	53	32
18	143	146	6.9	3.1	P731_0070K102_0230 EZ301U	430	430	1150	162.9	1140/7	4000	4000	7000	0.28	4.0	2.0	52	23
18	244	257	12	1.8	P731_0070K102_0230 EZ302U	770	770	1150	162.9	1140/7	4000	4000	7000	0.38	4.0	2.0	52	24
18	317	336	15	1.4	P731_0070K102_0230 EZ303U	810	840	1150	162.9	1140/7	4000	4000	7000	0.49	4.0	2.0	52	24
18	429	460	21	1.0	P731_0070K102_0230 EZ401U	810	840	1560	162.9	1140/7	4000	4000	7000	1.0	4.0	2.0	52	26
21	123	126	6.6	3.6	P731_0070K102_0200 EZ301U	370	370	870	141.1	2821/20	4000	4000	7000	0.27	4.0	2.0	52	23

n_{2N} [rpm]	M_{2N} [Nm]	$M_{2,0}$ [Nm]	a_{th}	S	Type	M_{2acc} [Nm]	M_{2accHT} [Nm]	M_{2NOT} [Nm]	i	i_{exakt}	n_{1maxDB} EL1,2 [rpm]	n_{1maxDB} EL3,4,5,6 [rpm]	n_{1maxZB} [rpm]	J_1 [kgcm²]	$\Delta\varphi_2$ [arcmin]	$\Delta\varphi_{2red}$ [arcmin]	C_2 [Nm/arcmin]	m [kg]
P731K (n_{1N} = 3000 rpm, $M_{2acc,max}$ = 810 Nm)																		
21	211	223	11	2.1	P731_0070K102_0200 EZ302U	660	660	870	141.1	2821/20	4000	4000	7000	0.37	4.0	2.0	52	24
21	275	291	15	1.6	P731_0070K102_0200 EZ303U	660	660	870	141.1	2821/20	4000	4000	7000	0.48	4.0	2.0	52	24
21	372	398	20	1.2	P731_0070K102_0200 EZ401U	810	840	1560	141.1	2821/20	4000	4000	7000	1.0	4.0	2.0	52	26
21	368	394	17	1.2	P731_0050K202_0280 EZ401U	810	840	1610	139.8	559/4	4000	3900	6500	1.1	4.0	2.0	53	33
24	108	110	6.4	4.1	P731_0070K102_0175 EZ301U	320	320	920	122.9	2090/17	4000	3800	6000	0.33	4.0	2.0	52	23
24	184	194	11	2.4	P731_0070K102_0175 EZ302U	580	580	920	122.9	2090/17	4000	3800	6000	0.43	4.0	2.0	52	24
24	239	253	14	1.8	P731_0070K102_0175 EZ303U	690	690	920	122.9	2090/17	4000	3800	6000	0.54	4.0	2.0	52	24
24	324	347	19	1.4	P731_0070K102_0175 EZ401U	810	840	1560	122.9	2090/17	4000	3800	6000	1.1	4.0	2.0	52	26
26	102	105	6.3	4.3	P731_0070K102_0165 EZ301U	310	310	820	117.0	117/1	4000	4000	7000	0.29	4.0	2.0	52	23
26	175	185	11	2.5	P731_0070K102_0165 EZ302U	550	550	820	117.0	117/1	4000	4000	7000	0.39	4.0	2.0	52	24
26	228	241	14	1.9	P731_0070K102_0165 EZ303U	620	620	820	117.0	117/1	4000	4000	7000	0.50	4.0	2.0	52	24
26	308	330	19	1.4	P731_0070K102_0165 EZ401U	810	840	1560	117.0	117/1	4000	4000	7000	1.0	4.0	2.0	52	26
26	173	183	9.3	2.5	P731_0050K202_0230 EZ302U	550	550	870	115.9	14835/128	4000	3900	6500	0.53	4.0	2.0	53	31
26	226	239	12	1.9	P731_0050K202_0230 EZ303U	650	650	870	115.9	14835/128	4000	3900	6500	0.64	4.0	2.0	53	32
26	305	327	16	1.4	P731_0050K202_0230 EZ401U	810	840	1610	115.9	14835/128	4000	3900	6500	1.2	4.0	2.0	53	33
26	101	103	10	3.5	P731_0100K102_0115 EZ301U	300	300	870	115.7	2660/23	3600	3300	5500	0.43	3.5	1.5	50	23
26	173	183	18	2.0	P731_0100K102_0115 EZ302U	540	540	870	115.7	2660/23	3600	3300	5500	0.53	3.5	1.5	50	24
26	225	238	23	1.6	P731_0100K102_0115 EZ303U	580	580	870	115.7	2660/23	3600	3300	5500	0.64	3.5	1.5	50	24
26	305	326	31	1.1	P731_0100K102_0115 EZ401U	580	580	1150	115.7	2660/23	3600	3300	5500	1.2	3.5	1.5	50	26
30	148	156	10	3.0	P731_0070K102_0140 EZ302U	460	460	740	98.80	494/5	4000	3800	6000	0.48	4.0	2.0	52	24
30	192	204	14	2.3	P731_0070K102_0140 EZ303U	560	560	740	98.80	494/5	4000	3800	6000	0.59	4.0	2.0	52	24
30	260	279	18	1.7	P731_0070K102_0140 EZ401U	790	790	1560	98.80	494/5	4000	3800	6000	1.1	4.0	2.0	52	26
30	400	437	28	1.1	P731_0070K102_0140 EZ501U	810	840	1560	98.80	494/5	4000	3800	6000	3.1	4.0	2.0	52	27
30	437	483	31	1.0	P731_0070K102_0140 EZ402U	810	840	1560	98.80	494/5	4000	3800	6000	1.8	4.0	2.0	52	27
32	138	146	17	2.5	P731_0100K102_0092 EZ302U	440	440	690	92.49	17480/189	3600	3300	5500	0.62	3.5	1.5	50	24
32	180	191	22	1.9	P731_0100K102_0092 EZ303U	520	520	690	92.49	17480/189	3600	3300	5500	0.73	3.5	1.5	50	24
32	244	261	30	1.4	P731_0100K102_0092 EZ401U	580	580	1150	92.49	17480/189	3600	3300	5500	1.3	3.5	1.5	50	26
34	132	140	10	3.3	P731_0070K102_0125 EZ302U	420	420	660	88.33	3003/34	4000	3800	6000	0.45	4.0	2.0	52	24
34	172	182	13	2.6	P731_0070K102_0125 EZ303U	500	500	660	88.33	3003/34	4000	3800	6000	0.56	4.0	2.0	52	24
34	233	249	18	1.9	P731_0070K102_0125 EZ401U	710	710	1560	88.33	3003/34	4000	3800	6000	1.1	4.0	2.0	52	26
34	357	391	27	1.2	P731_0070K102_0125 EZ501U	810	840	1560	88.33	3003/34	4000	3800	6000	3.1	4.0	2.0	52	27
34	391	432	30	1.1	P731_0070K102_0125 EZ402U	810	840	1560	88.33	3003/34	4000	3800	6000	1.8	4.0	2.0	52	27
34	131	138	8.7	3.4	P731_0050K202_0175 EZ302U	410	410	660	87.35	2795/32	3900	3500	5500	0.66	4.0	2.0	53	31
34	170	180	11	2.6	P731_0050K202_0175 EZ303U	490	490	660	87.35	2795/32	3900	3500	5500	0.77	4.0	2.0	53	32
34	230	247	15	1.9	P731_0050K202_0175 EZ401U	700	700	1610	87.35	2795/32	3900	3500	5500	1.3	4.0	2.0	53	33
34	353	386	24	1.2	P731_0050K202_0175 EZ501U	810	840	1610	87.35	2795/32	3900	3500	5500	3.3	4.0	2.0	53	34
34	386	427	26	1.1	P731_0050K202_0175 EZ402U	810	840	1610	87.35	2795/32	3900	3500	5500	2.0	4.0	2.0	53	34
36	124	131	16	2.8	P731_0100K102_0083 EZ302U	390	390	620	83.09	1911/23	3600	3300	5500	0.59	3.5	1.5	50	24
36	162	171	21	2.2	P731_0100K102_0083 EZ303U	470	470	620	83.09	1911/23	3600	3300	5500	0.70	3.5	1.5	50	24
36	219	235	29	1.6	P731_0100K102_0083 EZ401U	580	580	1150	83.09	1911/23	3600	3300	5500	1.2	3.5	1.5	50	26
36	336	367	44	1.0	P731_0100K102_0083 EZ501U	580	580	1150	83.09	1911/23	3600	3300	5500	3.2	3.5	1.5	50	27
37	121	128	9.9	3.6	P731_0070K102_0115 EZ302U	380	380	610	80.96	1862/23	3600	3300	5500	0.54	4.0	2.0	52	24
37	158	167	13	2.8	P731_0070K102_0115 EZ303U	460	460	610	80.96	1862/23	3600	3300	5500	0.65	4.0	2.0	52	24
37	213	229	17	2.1	P731_0070K102_0115 EZ401U	650	650	1560	80.96	1862/23	3600	3300	5500	1.2	4.0	2.0	52	26
37	328	358	27	1.3	P731_0070K102_0115 EZ501U	810	840	1560	80.96	1862/23	3600	3300	5500	3.1	4.0	2.0	52	27
37	358	396	29	1.2	P731_0070K102_0115 EZ402U	810	840	1560	80.96	1862/23	3600	3300	5500	1.9	4.0	2.0	52	27
42	106	112	10	3.8	P731_0070K102_0100 EZ302U	330	330	530	70.98	3549/50	4000	3800	6000	0.51	4.0	2.0	52	24
42	138	146	14	2.9	P731_0070K102_0100 EZ303U	400	400	530	70.98	3549/50	4000	3800	6000	0.62	4.0	2.0	52	24
42	187	200	17	2.4	P731_0070K102_0100 EZ401U	570	570	1560	70.98	3549/50	4000	3800	6000	1.2	4.0	2.0	52	26
42	287	314	26	1.5	P731_0070K102_0100 EZ501U	810	840	1560	70.98	3549/50	4000	3800	6000	3.1	4.0	2.0	52	27
42	314	347	28	1.4	P731_0070K102_0100 EZ402U	810	840	1560	70.98	3549/50	4000	3800	6000	1.9	4.0	2.0	52	27
43	182	195	14	2.4	P731_0050K202_0140 EZ401U	550	550	1610	69.26	14405/208	3900	3500	5500	1.4	4.0	2.0	53	33
43	280	306	22	1.6	P731_0050K202_0140 EZ501U	810	840	1610	69.26	14405/208	3900	3500	5500	3.4	4.0	2.0	53	34
43	306	339	24	1.4	P731_0050K202_0140 EZ402U	810	840	1610	69.26	14405/208	3900	3500	5500	2.1	4.0	2.0	53	34
45	99	105	15	3.5	P731_0100K102_0066 EZ302U	310	310	500	66.44	598/9	3600	3300	5500	0.71	3.5	1.5	50	24
45	129	137	20	2.7	P731_0100K102_0066 EZ303U	380	380	500	66.44	598/9	3600	3300	5500	0.82	3.5	1.5	50	24
45	175	188	27	2.0	P731_0100K102_0066 EZ401U	530	530	1150	66.44	598/9	3600	3300	5500	1.3	3.5	1.5	50	26
45	269	294	42	1.3	P731_0100K102_0066 EZ501U	580	580	1150	66.44	598/9	3600	3300	5500	3.3	3.5	1.5	50	27
45	294	325	46	1.2	P731_0100K102_0066 EZ402U	580	580	1150	66.44	598/9	3600	3300	5500	2.0	3.5	1.5	50	27
46	97	102	11	3.8	P731_0070K102_0092 EZ302U	300	300	490	64.74	1748/27	3600	3300	5500	0.63	4.0	2.0	52	24
46	126	133	15	2.9	P731_0070K102_0092 EZ303U	370	370	490	64.74	1748/27	3600	3300	5500	0.74	4.0	2.0	52	24
46	171	183	16	2.6	P731_0070K102_0092 EZ401U	520	520	1560	64.74	1748/27	3600	3300	5500	1.3	4.0	2.0	52	26
46	262	286	25	1.7	P731_0070K102_0092 EZ501U	810	840	1560	64.74	1748/27	3600	3300	5500	3.2	4.0	2.0	52	27
46	286	317	28	1.5	P731_0070K102_0092 EZ402U	810	840	1560	64.74	1748/27	3600	3300	5500	2.0	4.0	2.0	52	27

n_{2N} [rpm]	M_{2N} [Nm]	$M_{2,0}$ [Nm]	a_{th}	S	Type	M_{2acc} [Nm]	M_{2accHT} [Nm]	M_{2NOT} [Nm]	i	i_{exakt}	n_{1maxDB} EL1,2 [rpm]	n_{1maxDB} EL3,4,5,6 [rpm]	n_{1maxZB} [rpm]	J_1 [kgcm²]	$\Delta\varphi_2$ [arcmin]	$\Delta\varphi_{2red}$ [arcmin]	C_2 [Nm/arcmin]	m [kg]
P731K (n_{1N} = 3000 rpm, $M_{2acc,max}$ = 810 Nm)																		
46	420	524	41	1.0	P731_0070K102_0092 EZ404U	810	840	1560	64.74	1748/27	3600	3300	5500	3.3	4.0	2.0	52	29
50	158	169	27	2.2	P731_0100K102_0060 EZ401U	480	480	1150	60.00	60/1	3300	2800	5000	1.4	3.5	1.5	50	26
50	243	265	41	1.4	P731_0100K102_0060 EZ501U	580	580	1150	60.00	60/1	3300	2800	5000	3.4	3.5	1.5	50	27
50	265	294	44	1.3	P731_0100K102_0060 EZ402U	580	580	1150	60.00	60/1	3300	2800	5000	2.1	3.5	1.5	50	27
52	87	92	12	3.8	P731_0070K102_0083 EZ302U	270	270	440	58.16	13377/230	3600	3300	5500	0.59	4.0	2.0	52	24
52	113	120	16	2.9	P731_0070K102_0083 EZ303U	330	330	440	58.16	13377/230	3600	3300	5500	0.70	4.0	2.0	52	24
52	153	164	16	2.9	P731_0070K102_0083 EZ401U	470	470	1560	58.16	13377/230	3600	3300	5500	1.2	4.0	2.0	52	26
52	235	257	25	1.9	P731_0070K102_0083 EZ501U	810	840	1560	58.16	13377/230	3600	3300	5500	3.2	4.0	2.0	52	27
52	257	285	27	1.7	P731_0070K102_0083 EZ402U	810	840	1560	58.16	13377/230	3600	3300	5500	1.9	4.0	2.0	52	27
52	378	471	39	1.2	P731_0070K102_0083 EZ404U	810	840	1560	58.16	13377/230	3600	3300	5500	3.3	4.0	2.0	52	29
52	405	438	42	1.1	P731_0070K102_0083 EZ502U	810	840	1560	58.16	13377/230	3600	3300	5500	5.5	4.0	2.0	52	28
52	405	454	42	1.1	P731_0070K102_0083 EZ701U	810	840	1560	58.16	13377/230	3600	3300	5500	8.8	4.0	2.0	52	30
52	86	91	11	3.8	P731_0050K202_0115 EZ302U	270	270	430	57.73	6235/108	3500	3100	5000	0.97	4.0	2.0	53	31
52	112	119	14	2.9	P731_0050K202_0115 EZ303U	330	330	430	57.73	6235/108	3500	3100	5000	1.1	4.0	2.0	53	32
52	152	163	14	2.9	P731_0050K202_0115 EZ401U	460	460	1610	57.73	6235/108	3500	3100	5000	1.6	4.0	2.0	53	33
52	234	255	21	1.9	P731_0050K202_0115 EZ501U	810	840	1610	57.73	6235/108	3500	3100	5000	3.6	4.0	2.0	53	34
52	255	282	23	1.7	P731_0050K202_0115 EZ402U	810	840	1610	57.73	6235/108	3500	3100	5000	2.3	4.0	2.0	53	34
52	375	467	34	1.2	P731_0050K202_0115 EZ404U	810	840	1610	57.73	6235/108	3500	3100	5000	3.7	4.0	2.0	53	36
52	402	435	36	1.1	P731_0050K202_0115 EZ502U	810	840	1610	57.73	6235/108	3500	3100	5000	5.9	4.0	2.0	53	36
52	402	451	36	1.1	P731_0050K202_0115 EZ701U	810	840	1610	57.73	6235/108	3500	3100	5000	9.2	4.0	2.0	53	38
54	83	88	16	3.8	P731_0100K102_0056 EZ302U	260	260	420	55.68	15200/273	3300	2800	5000	0.97	3.5	1.5	50	24
54	108	115	21	2.9	P731_0100K102_0056 EZ303U	310	310	420	55.68	15200/273	3300	2800	5000	1.1	3.5	1.5	50	24
54	147	157	26	2.4	P731_0100K102_0056 EZ401U	450	450	1150	55.68	15200/273	3300	2800	5000	1.6	3.5	1.5	50	26
54	225	246	40	1.6	P731_0100K102_0056 EZ501U	580	580	1150	55.68	15200/273	3300	2800	5000	3.6	3.5	1.5	50	27
54	246	272	44	1.4	P731_0100K102_0056 EZ402U	580	580	1150	55.68	15200/273	3300	2800	5000	2.3	3.5	1.5	50	27
65	70	74	14	3.8	P731_0070K102_0066 EZ302U	220	220	350	46.51	2093/45	3600	3300	5500	0.72	4.0	2.0	52	24
65	91	96	19	2.9	P731_0070K102_0066 EZ303U	260	260	350	46.51	2093/45	3600	3300	5500	0.83	4.0	2.0	52	24
65	123	131	16	3.4	P731_0070K102_0066 EZ401U	370	370	1400	46.51	2093/45	3600	3300	5500	1.4	4.0	2.0	52	26
65	188	206	25	2.2	P731_0070K102_0066 EZ501U	700	700	1400	46.51	2093/45	3600	3300	5500	3.3	4.0	2.0	52	27
65	206	228	27	2.0	P731_0070K102_0066 EZ402U	700	700	1400	46.51	2093/45	3600	3300	5500	2.1	4.0	2.0	52	27
65	302	376	39	1.4	P731_0070K102_0066 EZ404U	790	790	1400	46.51	2093/45	3600	3300	5500	3.4	4.0	2.0	52	29
65	324	350	42	1.3	P731_0070K102_0066 EZ502U	790	790	1400	46.51	2093/45	3600	3300	5500	5.6	4.0	2.0	52	28
65	324	363	42	1.3	P731_0070K102_0066 EZ701U	790	790	1400	46.51	2093/45	3600	3300	5500	8.9	4.0	2.0	52	30
65	121	130	13	3.6	P731_0050K202_0092 EZ401U	370	370	1380	45.95	11395/248	3500	3100	5000	1.9	4.0	2.0	53	33
65	186	203	20	2.4	P731_0050K202_0092 EZ501U	690	690	1380	45.95	11395/248	3500	3100	5000	3.8	4.0	2.0	53	34
65	203	225	22	2.2	P731_0050K202_0092 EZ402U	690	690	1380	45.95	11395/248	3500	3100	5000	2.6	4.0	2.0	53	34
65	298	372	32	1.5	P731_0050K202_0092 EZ404U	810	840	1380	45.95	11395/248	3500	3100	5000	3.9	4.0	2.0	53	36
65	320	346	34	1.4	P731_0050K202_0092 EZ502U	810	840	1380	45.95	11395/248	3500	3100	5000	6.1	4.0	2.0	53	36
65	320	359	34	1.4	P731_0050K202_0092 EZ701U	810	840	1610	45.95	11395/248	3500	3100	5000	9.4	4.0	2.0	53	38
65	419	480	45	1.0	P731_0050K202_0092 EZ503U	810	840	1380	45.95	11395/248	3500	3100	5000	8.5	4.0	2.0	53	37
71	111	119	16	3.6	P731_0070K102_0060 EZ401U	340	340	1260	42.00	42/1	3300	2800	5000	1.4	4.0	2.0	52	26
71	170	186	25	2.4	P731_0070K102_0060 EZ501U	630	630	1260	42.00	42/1	3300	2800	5000	3.4	4.0	2.0	52	27
71	186	205	27	2.2	P731_0070K102_0060 EZ402U	630	630	1260	42.00	42/1	3300	2800	5000	2.1	4.0	2.0	52	27
71	273	340	40	1.5	P731_0070K102_0060 EZ404U	760	760	1260	42.00	42/1	3300	2800	5000	3.5	4.0	2.0	52	29
71	292	316	43	1.4	P731_0070K102_0060 EZ502U	760	760	1260	42.00	42/1	3300	2800	5000	5.7	4.0	2.0	52	28
71	292	328	43	1.4	P731_0070K102_0060 EZ701U	760	760	1260	42.00	42/1	3300	2800	5000	9.0	4.0	2.0	52	30
71	383	439	56	1.0	P731_0070K102_0060 EZ503U	760	760	1260	42.00	42/1	3300	2800	5000	8.1	4.0	2.0	52	30
71	82	87	17	2.9	P731_0050K202_0084 EZ303U	240	240	310	41.99	12470/297	3500	3100	5000	1.2	4.0	2.0	53	32
71	111	119	13	4.0	P731_0050K202_0084 EZ401U	340	340	1260	41.99	12470/297	3500	3100	5000	1.7	4.0	2.0	53	33
71	170	186	20	2.6	P731_0050K202_0084 EZ501U	630	630	1260	41.99	12470/297	3500	3100	5000	3.7	4.0	2.0	53	34
71	186	205	21	2.4	P731_0050K202_0084 EZ402U	630	630	1260	41.99	12470/297	3500	3100	5000	2.4	4.0	2.0	53	34
71	273	340	31	1.6	P731_0050K202_0084 EZ404U	810	840	1260	41.99	12470/297	3500	3100	5000	3.8	4.0	2.0	53	36
71	292	316	34	1.5	P731_0050K202_0084 EZ502U	810	840	1260	41.99	12470/297	3500	3100	5000	6.0	4.0	2.0	53	36
71	292	328	34	1.5	P731_0050K202_0084 EZ701U	790	790	1610	41.99	12470/297	3500	3100	5000	9.3	4.0	2.0	53	38
71	383	438	44	1.1	P731_0050K202_0084 EZ503U	810	840	1260	41.99	12470/297	3500	3100	5000	8.4	4.0	2.0	53	37
75	78	82	27	2.9	P731_0100K102_0040 EZ303U	230	230	300	40.00	40/1	3300	2800	5000	1.3	3.5	1.5	50	24
75	105	113	24	3.3	P731_0100K102_0040 EZ401U	320	320	1150	40.00	40/1	3300	2800	5000	1.8	3.5	1.5	50	26
75	162	177	37	2.2	P731_0100K102_0040 EZ501U	580	580	1150	40.00	40/1	3300	2800	5000	3.8	3.5	1.5	50	27
75	177	196	40	2.0	P731_0100K102_0040 EZ402U	580	580	1150	40.00	40/1	3300	2800	5000	2.5	3.5	1.5	50	27
75	260	324	59	1.3	P731_0100K102_0040 EZ404U	580	580	1150	40.00	40/1	3300	2800	5000	3.9	3.5	1.5	50	29
75	279	301	63	1.3	P731_0100K102_0040 EZ502U	580	580	1150	40.00	40/1	3300	2800	5000	6.1	3.5	1.5	50	28
75	279	312	63	1.3	P731_0100K102_0040 EZ701U	580	580	1150	40.00	40/1	3300	2800	5000	9.4	3.5	1.5	50	30
77	58	62	16	3.8	P731_0070K102_0056 EZ302U	180	180	290	38.98	1520/39	3300	2800	5000	0.99	4.0	2.0	52	24
77	76	80	21	2.9	P731_0070K102_0056 EZ303U	220	220	290	38.98	1520/39	3300	2800	5000	1.1	4.0	2.0	52	24

n_{2N} [rpm]	M_{2N} [Nm]	$M_{2,0}$ [Nm]	a_{th}	S	Type	M_{2acc} [Nm]	M_{2accHT} [Nm]	M_{2NOT} [Nm]	i	i_{exakt}	n_{1maxDB} EL1,2 [rpm]	n_{1maxDB} EL3,4,5,6 [rpm]	n_{1maxZB} [rpm]	J_1 [kgcm²]	$\Delta\varphi_2$ [arcmin]	$\Delta\varphi_{2red}$ [arcmin]	C_2 [Nm/arcmin]	m [kg]
P731K (n_{1N} = 3000 rpm, $M_{2acc,max}$ = 810 Nm)																		
77	103	110	16	3.8	P731_0070K102_0056 EZ401U	310	310	1170	38.98	1520/39	3300	2800	5000	1.6	4.0	2.0	52	26
77	158	172	25	2.5	P731_0070K102_0056 EZ501U	590	590	1170	38.98	1520/39	3300	2800	5000	3.6	4.0	2.0	52	27
77	172	191	27	2.3	P731_0070K102_0056 EZ402U	590	590	1170	38.98	1520/39	3300	2800	5000	2.3	4.0	2.0	52	27
77	253	315	40	1.5	P731_0070K102_0056 EZ404U	740	740	1170	38.98	1520/39	3300	2800	5000	3.7	4.0	2.0	52	29
77	271	293	43	1.4	P731_0070K102_0056 EZ502U	740	740	1170	38.98	1520/39	3300	2800	5000	5.9	4.0	2.0	52	28
77	271	304	43	1.4	P731_0070K102_0056 EZ701U	730	730	1170	38.98	1520/39	3300	2800	5000	9.2	4.0	2.0	52	30
77	356	407	56	1.1	P731_0070K102_0056 EZ503U	740	740	1170	38.98	1520/39	3300	2800	5000	8.3	4.0	2.0	52	30
90	88	94	12	5.0	P731_0050K202_0067 EZ401U	270	270	1000	33.42	11395/341	3500	3100	5000	2.1	4.0	2.0	53	33
90	135	148	18	3.3	P731_0050K202_0067 EZ501U	500	500	1000	33.42	11395/341	3500	3100	5000	4.0	4.0	2.0	53	34
90	148	163	20	3.0	P731_0050K202_0067 EZ402U	500	500	1000	33.42	11395/341	3500	3100	5000	2.8	4.0	2.0	53	34
90	217	270	30	2.0	P731_0050K202_0067 EZ404U	750	750	1000	33.42	11395/341	3500	3100	5000	4.1	4.0	2.0	53	36
90	233	252	32	1.9	P731_0050K202_0067 EZ502U	750	750	1000	33.42	11395/341	3500	3100	5000	6.3	4.0	2.0	53	36
90	233	261	32	1.9	P731_0050K202_0067 EZ701U	630	630	1610	33.42	11395/341	3500	3100	5000	9.6	4.0	2.0	53	38
90	305	349	42	1.4	P731_0050K202_0067 EZ503U	750	750	1000	33.42	11395/341	3500	3100	5000	8.7	4.0	2.0	53	37
90	377	453	52	1.2	P731_0050K202_0067 EZ702U	810	840	1610	33.42	11395/341	3500	3100	5000	15	4.0	2.0	53	40
90	424	503	58	1.0	P731_0050K202_0067 EZ505U	810	840	1610	33.42	11395/341	3500	3100	5000	13	4.0	2.0	53	40
100	121	133	18	3.6	P731_0050K202_0060 EZ501U	450	450	900	30.00	30/1	3000	2600	4500	4.6	4.0	2.0	53	34
100	133	147	20	3.3	P731_0050K202_0060 EZ402U	450	450	900	30.00	30/1	3000	2600	4500	3.4	4.0	2.0	53	34
100	195	243	29	2.3	P731_0050K202_0060 EZ404U	680	680	900	30.00	30/1	3000	2600	4500	4.7	4.0	2.0	53	36
100	209	226	31	2.1	P731_0050K202_0060 EZ502U	680	680	900	30.00	30/1	3000	2600	4500	6.9	4.0	2.0	53	36
100	209	234	31	2.1	P731_0050K202_0060 EZ701U	560	560	1610	30.00	30/1	3000	2600	4500	10	4.0	2.0	53	38
100	274	313	41	1.6	P731_0050K202_0060 EZ503U	680	680	900	30.00	30/1	3000	2600	4500	9.3	4.0	2.0	53	37
100	339	406	50	1.3	P731_0050K202_0060 EZ702U	810	840	1610	30.00	30/1	3000	2600	4500	15	4.0	2.0	53	40
100	381	452	56	1.2	P731_0050K202_0060 EZ505U	810	840	1610	30.00	30/1	3000	2600	4500	14	4.0	2.0	53	40
107	55	58	27	2.9	P731_0070K102_0040 EZ303U	160	160	210	28.00	28/1	3300	2800	5000	1.3	4.0	2.0	52	24
107	74	79	17	4.8	P731_0070K102_0040 EZ401U	220	220	840	28.00	28/1	3300	2800	5000	1.9	4.0	2.0	52	26
107	113	124	26	3.1	P731_0070K102_0040 EZ501U	420	420	840	28.00	28/1	3300	2800	5000	3.8	4.0	2.0	52	27
107	124	137	28	2.8	P731_0070K102_0040 EZ402U	420	420	840	28.00	28/1	3300	2800	5000	2.6	4.0	2.0	52	27
107	182	227	41	1.9	P731_0070K102_0040 EZ404U	630	630	840	28.00	28/1	3300	2800	5000	3.9	4.0	2.0	52	29
107	195	211	44	1.8	P731_0070K102_0040 EZ502U	630	630	840	28.00	28/1	3300	2800	5000	6.1	4.0	2.0	52	28
107	195	219	44	1.8	P731_0070K102_0040 EZ701U	530	530	840	28.00	28/1	3300	2800	5000	9.4	4.0	2.0	52	30
107	256	292	58	1.4	P731_0070K102_0040 EZ503U	630	630	840	28.00	28/1	3300	2800	5000	8.5	4.0	2.0	52	30
116	180	202	30	2.4	P731_0050K202_0052 EZ701U	490	490	1610	25.89	10535/407	3000	2600	4500	10	4.0	2.0	53	38
116	292	351	48	1.5	P731_0050K202_0052 EZ702U	810	840	1610	25.89	10535/407	3000	2600	4500	15	4.0	2.0	53	40
116	329	390	54	1.3	P731_0050K202_0052 EZ505U	810	840	1610	25.89	10535/407	3000	2600	4500	14	4.0	2.0	53	40
116	402	507	67	1.1	P731_0050K202_0052 EZ703U	810	840	1610	25.89	10535/407	3000	2600	4500	23	4.0	2.0	53	42
150	139	156	28	3.2	P731_0050K202_0040 EZ701U	380	380	1500	20.00	20/1	3000	2600	4500	11	4.0	2.0	53	38
150	226	271	45	1.9	P731_0050K202_0040 EZ702U	770	770	1500	20.00	20/1	3000	2600	4500	16	4.0	2.0	53	40
150	254	301	51	1.7	P731_0050K202_0040 EZ505U	810	840	1500	20.00	20/1	3000	2600	4500	15	4.0	2.0	53	40
150	310	391	62	1.4	P731_0050K202_0040 EZ703U	810	840	1500	20.00	20/1	3000	2600	4500	24	4.0	2.0	53	42
188	111	125	27	3.2	P731_0040K202_0040 EZ701U	300	300	1200	16.00	16/1	3000	2600	4500	11	4.5	2.5	49	38
188	181	217	45	2.0	P731_0040K202_0040 EZ702U	620	620	1200	16.00	16/1	3000	2600	4500	16	4.5	2.5	49	40
188	203	241	50	1.8	P731_0040K202_0040 EZ505U	680	680	1200	16.00	16/1	3000	2600	4500	15	4.5	2.5	49	40
188	248	313	61	1.4	P731_0040K202_0040 EZ703U	680	680	1200	16.00	16/1	3000	2600	4500	24	4.5	2.5	49	42
250	84	94	27	3.2	P731_0030K202_0040 EZ701U	230	230	900	12.00	12/1	3000	2600	4500	11	4.5	2.5	40	38
250	135	163	45	2.0	P731_0030K202_0040 EZ702U	460	460	900	12.00	12/1	3000	2600	4500	17	4.5	2.5	40	40
250	152	181	50	1.8	P731_0030K202_0040 EZ505U	500	500	900	12.00	12/1	3000	2600	4500	15	4.5	2.5	40	40
250	186	235	61	1.4	P731_0030K202_0040 EZ703U	500	500	900	12.00	12/1	3000	2600	4500	25	4.5	2.5	40	42
P731K (n_{1N} = 4500 rpm, $M_{2acc,max}$ = 810 Nm)																		
107	375	604	43	1.2	P731_0050K202_0084 EZ505U	810	840	1610	41.99	12470/297	3500	3100	5000	13	4.0	2.0	53	40
135	299	481	41	1.5	P731_0050K202_0067 EZ505U	810	840	1610	33.42	11395/341	3500	3100	5000	13	4.0	2.0	53	40
150	268	432	40	1.6	P731_0050K202_0060 EZ505U	810	840	1610	30.00	30/1	3000	2600	4500	14	4.0	2.0	53	40
150	342	565	51	1.3	P731_0050K202_0060 EZ703U	810	840	1610	30.00	30/1	3000	2600	4500	23	4.0	2.0	53	42
174	231	373	40	1.8	P731_0050K202_0052 EZ505U	810	840	1610	25.89	10535/407	3000	2600	4500	14	4.0	2.0	53	40
174	295	487	50	1.4	P731_0050K202_0052 EZ703U	810	840	1610	25.89	10535/407	3000	2600	4500	23	4.0	2.0	53	42
225	179	288	40	2.2	P731_0050K202_0040 EZ505U	810	840	1500	20.00	20/1	3000	2600	4500	15	4.0	2.0	53	40
225	228	376	51	1.7	P731_0050K202_0040 EZ703U	810	840	1500	20.00	20/1	3000	2600	4500	24	4.0	2.0	53	42
281	143	230	40	2.2	P731_0040K202_0040 EZ505U	680	680	1200	16.00	16/1	3000	2600	4500	15	4.5	2.5	49	40
281	182	301	51	1.7	P731_0040K202_0040 EZ703U	680	680	1200	16.00	16/1	3000	2600	4500	24	4.5	2.5	49	42
375	107	173	40	2.2	P731_0030K202_0040 EZ505U	500	500	900	12.00	12/1	3000	2600	4500	15	4.5	2.5	40	40
375	137	226	51	1.7	P731_0030K202_0040 EZ703U	500	500	900	12.00	12/1	3000	2600	4500	25	4.5	2.5	40	42
P731K (n_{1N} = 6000 rpm, $M_{2acc,max}$ = 810 Nm)																		
15	329	351	8.2	1.3	P731_0070K102_0560 EZ301U	700	700	1230	392.7	1178/3	4000	4000	7000	0.21	4.0	2.0	52	23
17	294	314	13	1.2	P731_0100K102_0350 EZ301U	580	580	1150	351.1	7372/21	4000	4000	7000	0.23	3.5	1.5	50	23

n_{2N} [rpm]	M_{2N} [Nm]	$M_{2,0}$ [Nm]	a_{th}	S	Type	M_{2acc} [Nm]	M_{2accHT} [Nm]	M_{2NOT} [Nm]	i	i_{exakt}	n_{1maxDB} EL1,2 [rpm]	n_{1maxDB} EL3,4,5,6 [rpm]	n_{1maxZB} [rpm]	J_1 [kgcm²]	$\Delta\varphi_2$ [arcmin]	$\Delta\varphi_{2red}$ [arcmin]	C_2 [Nm/arcmin]	m [kg]
P731K (n_{1N} = 6000 rpm, $M_{2acc,max}$ = 810 Nm)																		
18	275	294	7.8	1.6	P731_0070K102_0470 EZ301U	810	830	1470	328.4	2299/7	4000	4000	7000	0.22	4.0	2.0	52	23
21	236	252	8.0	1.8	P731_0070K102_0400 EZ301U	500	500	890	282.1	2821/10	4000	4000	7000	0.21	4.0	2.0	52	23
21	235	251	12	1.5	P731_0100K102_0280 EZ301U	580	580	1150	280.5	5890/21	4000	4000	7000	0.26	3.5	1.5	50	23
22	392	439	11	1.1	P731_0050K202_0560 EZ302U	810	840	1400	277.7	6665/24	4000	3900	6500	0.34	4.0	2.0	53	31
24	206	220	7.3	2.1	P731_0070K102_0350 EZ301U	650	650	1410	245.7	3686/15	4000	4000	7000	0.23	4.0	2.0	52	23
24	347	388	12	1.3	P731_0070K102_0350 EZ302U	810	840	1410	245.7	3686/15	4000	4000	7000	0.33	4.0	2.0	52	24
25	198	211	7.2	2.2	P731_0070K102_0340 EZ301U	590	590	1050	235.9	4719/20	4000	4000	7000	0.22	4.0	2.0	52	23
25	333	373	12	1.3	P731_0070K102_0340 EZ302U	590	590	1050	235.9	4719/20	4000	4000	7000	0.32	4.0	2.0	52	24
26	195	208	12	1.8	P731_0100K102_0230 EZ301U	580	580	1150	232.7	11400/49	4000	4000	7000	0.28	3.5	1.5	50	23
26	328	368	20	1.1	P731_0100K102_0230 EZ302U	580	580	1150	232.7	11400/49	4000	4000	7000	0.38	3.5	1.5	50	24
26	326	365	10	1.3	P731_0050K202_0460 EZ302U	810	840	1330	231.1	1849/8	4000	3900	6500	0.36	4.0	2.0	53	31
26	426	489	14	1.0	P731_0050K202_0460 EZ303U	810	840	1330	231.1	1849/8	4000	3900	6500	0.47	4.0	2.0	53	32
31	164	175	6.9	2.7	P731_0070K102_0280 EZ301U	520	520	1220	196.3	589/3	4000	4000	7000	0.26	4.0	2.0	52	23
31	277	310	12	1.6	P731_0070K102_0280 EZ302U	810	840	1220	196.3	589/3	4000	4000	7000	0.36	4.0	2.0	52	24
31	362	416	15	1.2	P731_0070K102_0280 EZ303U	810	840	1220	196.3	589/3	4000	4000	7000	0.47	4.0	2.0	52	24
31	425	517	18	1.0	P731_0070K102_0280 EZ401U	810	840	1560	196.3	589/3	4000	4000	7000	1.0	4.0	2.0	52	26
34	148	158	6.7	3.0	P731_0070K102_0250 EZ301U	470	470	1020	176.5	8827/50	4000	4000	7000	0.24	4.0	2.0	52	23
34	249	279	11	1.8	P731_0070K102_0250 EZ302U	760	760	1020	176.5	8827/50	4000	4000	7000	0.34	4.0	2.0	52	24
34	326	374	15	1.4	P731_0070K102_0250 EZ303U	760	760	1020	176.5	8827/50	4000	4000	7000	0.45	4.0	2.0	52	24
34	382	465	17	1.2	P731_0070K102_0250 EZ401U	780	780	1390	176.5	8827/50	4000	4000	7000	0.98	4.0	2.0	52	26
35	244	273	9.7	1.8	P731_0050K202_0350 EZ302U	810	810	1100	172.8	9675/56	4000	3900	6500	0.41	4.0	2.0	53	31
35	319	366	13	1.4	P731_0050K202_0350 EZ303U	810	830	1100	172.8	9675/56	4000	3900	6500	0.52	4.0	2.0	53	32
35	374	455	15	1.2	P731_0050K202_0350 EZ401U	810	840	1610	172.8	9675/56	4000	3900	6500	1.1	4.0	2.0	53	33
37	136	146	6.6	3.2	P731_0070K102_0230 EZ301U	430	430	1150	162.9	1140/7	4000	4000	7000	0.28	4.0	2.0	52	23
37	230	257	11	1.9	P731_0070K102_0230 EZ302U	770	770	1150	162.9	1140/7	4000	4000	7000	0.38	4.0	2.0	52	24
37	300	345	14	1.5	P731_0070K102_0230 EZ303U	810	840	1150	162.9	1140/7	4000	4000	7000	0.49	4.0	2.0	52	24
37	352	429	17	1.2	P731_0070K102_0230 EZ401U	810	840	1560	162.9	1140/7	4000	4000	7000	1.0	4.0	2.0	52	26
43	118	126	6.4	3.7	P731_0070K102_0200 EZ301U	370	370	870	141.1	2821/20	4000	4000	7000	0.27	4.0	2.0	52	23
43	199	223	11	2.2	P731_0070K102_0200 EZ302U	660	660	870	141.1	2821/20	4000	4000	7000	0.37	4.0	2.0	52	24
43	260	299	14	1.7	P731_0070K102_0200 EZ303U	660	660	870	141.1	2821/20	4000	4000	7000	0.48	4.0	2.0	52	24
43	305	372	16	1.4	P731_0070K102_0200 EZ401U	810	840	1560	141.1	2821/20	4000	4000	7000	1.0	4.0	2.0	52	26
43	302	368	14	1.5	P731_0050K202_0280 EZ401U	810	840	1610	139.8	559/4	4000	3900	6500	1.1	4.0	2.0	53	33
49	103	110	6.1	4.3	P731_0070K102_0175 EZ301U	320	320	920	122.9	2090/17	4000	3800	6000	0.33	4.0	2.0	52	23
49	174	194	10	2.5	P731_0070K102_0175 EZ302U	580	580	920	122.9	2090/17	4000	3800	6000	0.43	4.0	2.0	52	24
49	227	260	14	1.9	P731_0070K102_0175 EZ303U	690	690	920	122.9	2090/17	4000	3800	6000	0.54	4.0	2.0	52	24
49	266	324	16	1.7	P731_0070K102_0175 EZ401U	810	840	1560	122.9	2090/17	4000	3800	6000	1.1	4.0	2.0	52	26
49	393	509	23	1.1	P731_0070K102_0175 EZ501U	810	840	1560	122.9	2090/17	4000	3800	6000	3.0	4.0	2.0	52	27
49	405	567	24	1.1	P731_0070K102_0175 EZ402U	810	840	1560	122.9	2090/17	4000	3800	6000	1.8	4.0	2.0	52	27
51	98	105	6.1	4.5	P731_0070K102_0165 EZ301U	310	310	820	117.0	117/1	4000	4000	7000	0.29	4.0	2.0	52	23
51	165	185	10	2.7	P731_0070K102_0165 EZ302U	550	550	820	117.0	117/1	4000	4000	7000	0.39	4.0	2.0	52	24
51	216	248	13	2.0	P731_0070K102_0165 EZ303U	620	620	820	117.0	117/1	4000	4000	7000	0.50	4.0	2.0	52	24
51	253	308	16	1.7	P731_0070K102_0165 EZ401U	810	840	1560	117.0	117/1	4000	4000	7000	1.0	4.0	2.0	52	26
51	374	484	23	1.2	P731_0070K102_0165 EZ501U	810	840	1560	117.0	117/1	4000	4000	7000	3.0	4.0	2.0	52	27
51	385	539	24	1.1	P731_0070K102_0165 EZ402U	810	840	1560	117.0	117/1	4000	4000	7000	1.7	4.0	2.0	52	27
52	164	183	8.8	2.7	P731_0050K202_0230 EZ302U	550	550	870	115.9	14835/128	4000	3900	6500	0.53	4.0	2.0	53	31
52	214	245	11	2.1	P731_0050K202_0230 EZ303U	650	650	870	115.9	14835/128	4000	3900	6500	0.64	4.0	2.0	53	32
52	251	305	13	1.8	P731_0050K202_0230 EZ401U	810	840	1610	115.9	14835/128	4000	3900	6500	1.2	4.0	2.0	53	33
52	371	480	20	1.2	P731_0050K202_0230 EZ501U	810	840	1610	115.9	14835/128	4000	3900	6500	3.1	4.0	2.0	53	34
52	382	534	21	1.2	P731_0050K202_0230 EZ402U	810	840	1610	115.9	14835/128	4000	3900	6500	1.9	4.0	2.0	53	34
61	139	156	10	3.0	P731_0070K102_0140 EZ302U	460	460	740	98.80	494/5	4000	3800	6000	0.48	4.0	2.0	52	24
61	182	209	13	2.3	P731_0070K102_0140 EZ303U	560	560	740	98.80	494/5	4000	3800	6000	0.59	4.0	2.0	52	24
61	214	260	16	2.0	P731_0070K102_0140 EZ401U	790	790	1560	98.80	494/5	4000	3800	6000	1.1	4.0	2.0	52	26
61	316	409	23	1.3	P731_0070K102_0140 EZ501U	810	840	1560	98.80	494/5	4000	3800	6000	3.1	4.0	2.0	52	27
61	325	455	24	1.3	P731_0070K102_0140 EZ402U	810	840	1560	98.80	494/5	4000	3800	6000	1.8	4.0	2.0	52	27
68	125	140	10	3.3	P731_0070K102_0125 EZ302U	420	420	660	88.33	3003/34	4000	3800	6000	0.45	4.0	2.0	52	24
68	163	187	13	2.5	P731_0070K102_0125 EZ303U	500	500	660	88.33	3003/34	4000	3800	6000	0.56	4.0	2.0	52	24
68	191	233	16	2.1	P731_0070K102_0125 EZ401U	710	710	1560	88.33	3003/34	4000	3800	6000	1.1	4.0	2.0	52	26
68	283	366	23	1.4	P731_0070K102_0125 EZ501U	810	840	1560	88.33	3003/34	4000	3800	6000	3.1	4.0	2.0	52	27
68	291	407	24	1.4	P731_0070K102_0125 EZ402U	810	840	1560	88.33	3003/34	4000	3800	6000	1.8	4.0	2.0	52	27
85	100	112	10	3.8	P731_0070K102_0100 EZ302U	330	330	530	70.98	3549/50	4000	3800	6000	0.51	4.0	2.0	52	24
85	131	150	14	2.9	P731_0070K102_0100 EZ303U	400	400	530	70.98	3549/50	4000	3800	6000	0.62	4.0	2.0	52	24
85	154	187	16	2.5	P731_0070K102_0100 EZ401U	570	570	1560	70.98	3549/50	4000	3800	6000	1.2	4.0	2.0	52	26
85	227	294	24	1.7	P731_0070K102_0100 EZ501U	810	840	1560	70.98	3549/50	4000	3800	6000	3.1	4.0	2.0	52	27
85	234	327	24	1.6	P731_0070K102_0100 EZ402U	810	840	1560	70.98	3549/50	4000	3800	6000	1.9	4.0	2.0	52	27

n_{2N} [rpm]	M_{2N} [Nm]	$M_{2,0}$ [Nm]	a_{th}	S	Type	M_{2acc} [Nm]	M_{2accHT} [Nm]	M_{2NOT} [Nm]	i	i_{exakt}	n_{1maxDB} EL1,2 [rpm]	n_{1maxDB} EL3,4,5,6 [rpm]	n_{1maxZB} [rpm]	J_1 [kgcm²]	$\Delta\varphi_2$ [arcmin]	$\Delta\varphi_{2red}$ [arcmin]	C_2 [Nm/arcmin]	m [kg]
P731K (n_{1N} = 6000 rpm, $M_{2acc,max}$ = 810 Nm)																		
85	347	521	36	1.1	P731_0070K102_0100 EZ502U	810	840	1560	70.98	3549/50	4000	3800	6000	5.4	4.0	2.0	52	28
85	347	528	36	1.1	P731_0070K102_0100 EZ701U	810	840	1560	70.98	3549/50	4000	3800	6000	8.7	4.0	2.0	52	30
P831K (n_{1N} = 3000 rpm, $M_{2acc,max}$ = 1840 Nm)																		
5.4	831	878	12	1.0	P831_0100K202_0560 EZ302U	1380	1380	2760	555.4	6665/12	4000	3900	6500	0.34	3.5	1.5	132	47
6.2	727	768	8.4	1.2	P831_0070K202_0690 EZ302U	1080	1080	1840	486.0	46655/96	4000	3900	6500	0.33	3.5	1.5	128	47
6.5	692	731	11	1.2	P831_0100K202_0460 EZ302U	1380	1380	2660	462.3	1849/4	4000	3900	6500	0.36	3.5	1.5	132	47
7.7	582	615	7.1	1.7	P831_0070K202_0560 EZ302U	1290	1290	1960	388.8	9331/24	4000	3900	6500	0.35	3.5	1.5	128	47
7.7	757	801	9.3	1.3	P831_0070K202_0560 EZ303U	1290	1290	1960	388.8	9331/24	4000	3900	6500	0.46	3.5	1.5	128	47
8.5	529	559	11	1.2	P831_0070K202_0500 EZ302U	780	780	1340	353.4	46655/132	4000	3900	6500	0.33	3.5	1.5	128	47
8.7	517	546	11	1.6	P831_0100K202_0350 EZ302U	1380	1380	2210	345.5	9675/28	4000	3900	6500	0.41	3.5	1.5	132	47
8.7	673	712	14	1.3	P831_0100K202_0350 EZ303U	1380	1380	2210	345.5	9675/28	4000	3900	6500	0.52	3.5	1.5	132	47
9.3	484	511	6.8	2.1	P831_0070K202_0460 EZ302U	1400	1400	1860	323.6	12943/40	4000	3900	6500	0.37	3.5	1.5	128	47
9.3	630	667	8.9	1.6	P831_0070K202_0460 EZ303U	1400	1400	1860	323.6	12943/40	4000	3900	6500	0.48	3.5	1.5	128	47
9.3	852	913	12	1.2	P831_0070K202_0460 EZ401U	1490	1490	2890	323.6	12943/40	4000	3900	6500	1.0	3.5	1.5	128	49
11	423	447	8.4	1.9	P831_0070K202_0400 EZ302U	940	940	1430	282.8	9331/33	4000	3900	6500	0.35	3.5	1.5	128	47
11	551	583	11	1.4	P831_0070K202_0400 EZ303U	940	940	1430	282.8	9331/33	4000	3900	6500	0.46	3.5	1.5	128	47
11	736	789	18	1.2	P831_0100K202_0280 EZ401U	1380	1380	2760	279.5	559/2	4000	3900	6500	1.1	3.5	1.5	132	49
11	734	786	9.0	1.5	P831_0050K302_0560 EZ401U	1540	1540	2730	278.5	12255/44	3800	3500	6000	1.0	4.0	2.0	128	54
12	362	382	6.3	2.8	P831_0070K202_0350 EZ302U	1140	1140	1550	241.9	1935/8	4000	3900	6500	0.42	3.5	1.5	128	47
12	471	498	8.3	2.1	P831_0070K202_0350 EZ303U	1160	1160	1550	241.9	1935/8	4000	3900	6500	0.53	3.5	1.5	128	47
12	637	683	11	1.6	P831_0070K202_0350 EZ401U	1490	1490	2890	241.9	1935/8	4000	3900	6500	1.1	3.5	1.5	128	49
12	979	1070	17	1.0	P831_0070K202_0350 EZ501U	1490	1490	2890	241.9	1935/8	4000	3900	6500	3.0	3.5	1.5	128	50
13	352	372	6.3	2.8	P831_0070K202_0340 EZ302U	1020	1020	1350	235.3	12943/55	4000	3900	6500	0.38	3.5	1.5	128	47
13	458	485	8.2	2.2	P831_0070K202_0340 EZ303U	1020	1020	1350	235.3	12943/55	4000	3900	6500	0.49	3.5	1.5	128	47
13	620	664	11	1.6	P831_0070K202_0340 EZ401U	1250	1250	2220	235.3	12943/55	4000	3900	6500	1.0	3.5	1.5	128	49
13	347	366	9.7	2.5	P831_0100K202_0230 EZ302U	1090	1090	1740	231.8	14835/64	4000	3900	6500	0.53	3.5	1.5	132	47
13	451	478	13	1.9	P831_0100K202_0230 EZ303U	1310	1310	1740	231.8	14835/64	4000	3900	6500	0.64	3.5	1.5	132	47
13	611	654	17	1.4	P831_0100K202_0230 EZ401U	1380	1380	2760	231.8	14835/64	4000	3900	6500	1.2	3.5	1.5	132	49
13	609	652	8.6	1.8	P831_0050K302_0460 EZ401U	1840	1850	3230	231.1	1849/8	3800	3500	6000	1.1	4.0	2.0	128	54
13	935	1022	13	1.2	P831_0050K302_0460 EZ501U	1840	1870	3230	231.1	1849/8	3800	3500	6000	3.1	4.0	2.0	128	55
13	1022	1131	14	1.1	P831_0050K302_0460 EZ402U	1840	1870	3230	231.1	1849/8	3800	3500	6000	1.8	4.0	2.0	128	55
15	515	552	11	1.9	P831_0070K202_0280 EZ401U	1490	1490	2890	195.7	3913/20	4000	3900	6500	1.1	3.5	1.5	128	49
15	792	865	16	1.3	P831_0070K202_0280 EZ501U	1490	1490	2890	195.7	3913/20	4000	3900	6500	3.1	3.5	1.5	128	50
15	865	957	18	1.2	P831_0070K202_0280 EZ402U	1490	1490	2890	195.7	3913/20	4000	3900	6500	1.8	3.5	1.5	128	50
17	263	278	6.9	3.2	P831_0070K202_0250 EZ302U	830	830	1120	175.9	1935/11	4000	3900	6500	0.43	3.5	1.5	128	47
17	343	362	9.0	2.5	P831_0070K202_0250 EZ303U	850	850	1120	175.9	1935/11	4000	3900	6500	0.54	3.5	1.5	128	47
17	463	497	10	2.2	P831_0070K202_0250 EZ401U	1410	1410	2890	175.9	1935/11	4000	3900	6500	1.1	3.5	1.5	128	49
17	712	778	16	1.4	P831_0070K202_0250 EZ501U	1490	1490	2890	175.9	1935/11	4000	3900	6500	3.0	3.5	1.5	128	50
17	778	861	17	1.3	P831_0070K202_0250 EZ402U	1490	1490	2890	175.9	1935/11	4000	3900	6500	1.8	3.5	1.5	128	50
17	261	276	9.0	3.3	P831_0100K202_0175 EZ302U	820	820	1310	174.7	2795/16	3900	3500	5500	0.66	3.5	1.5	132	47
17	340	360	12	2.5	P831_0100K202_0175 EZ303U	990	990	1310	174.7	2795/16	3900	3500	5500	0.77	3.5	1.5	132	47
17	460	493	16	1.8	P831_0100K202_0175 EZ401U	1380	1380	2760	174.7	2795/16	3900	3500	5500	1.3	3.5	1.5	132	49
17	707	773	24	1.2	P831_0100K202_0175 EZ501U	1380	1380	2760	174.7	2795/16	3900	3500	5500	3.3	3.5	1.5	132	50
17	773	855	27	1.1	P831_0100K202_0175 EZ402U	1380	1380	2760	174.7	2795/16	3900	3500	5500	2.0	3.5	1.5	132	50
17	457	490	8.0	2.4	P831_0050K302_0350 EZ401U	1390	1390	3230	173.7	4515/26	3800	3500	6000	1.2	4.0	2.0	128	54
17	703	768	12	1.6	P831_0050K302_0350 EZ501U	1840	1870	3230	173.7	4515/26	3800	3500	6000	3.2	4.0	2.0	128	55
17	768	850	13	1.4	P831_0050K302_0350 EZ402U	1840	1870	3230	173.7	4515/26	3800	3500	6000	1.9	4.0	2.0	128	55
18	243	256	6.3	3.8	P831_0070K202_0230 EZ302U	760	760	1220	162.3	20769/128	4000	3900	6500	0.53	3.5	1.5	128	47
18	316	334	8.2	2.9	P831_0070K202_0230 EZ303U	920	920	1220	162.3	20769/128	4000	3900	6500	0.64	3.5	1.5	128	47
18	427	458	10	2.3	P831_0070K202_0230 EZ401U	1300	1300	2890	162.3	20769/128	4000	3900	6500	1.2	3.5	1.5	128	49
18	656	718	16	1.5	P831_0070K202_0230 EZ501U	1490	1490	2890	162.3	20769/128	4000	3900	6500	3.1	3.5	1.5	128	50
18	718	794	17	1.4	P831_0070K202_0230 EZ402U	1490	1490	2890	162.3	20769/128	4000	3900	6500	1.9	3.5	1.5	128	50
21	375	402	9.8	2.7	P831_0070K202_0200 EZ401U	1140	1140	2890	142.3	7826/55	4000	3900	6500	1.1	3.5	1.5	128	49
21	576	629	15	1.7	P831_0070K202_0200 EZ501U	1490	1490	2890	142.3	7826/55	4000	3900	6500	3.1	3.5	1.5	128	50
21	629	696	16	1.6	P831_0070K202_0200 EZ402U	1490	1490	2890	142.3	7826/55	4000	3900	6500	1.8	3.5	1.5	128	50
21	924	1151	24	1.1	P831_0070K202_0200 EZ404U	1490	1490	2890	142.3	7826/55	4000	3900	6500	3.2	3.5	1.5	128	52
21	991	1071	26	1.0	P831_0070K202_0200 EZ502U	1490	1490	2890	142.3	7826/55	4000	3900	6500	5.4	3.5	1.5	128	51
21	991	1111	26	1.0	P831_0070K202_0200 EZ701U	1490	1490	2890	142.3	7826/55	4000	3900	6500	8.7	3.5	1.5	128	53
22	367	394	7.6	3.0	P831_0050K302_0280 EZ401U	1110	1110	3230	139.4	17845/128	3800	3500	6000	1.3	4.0	2.0	128	54
22	564	617	12	2.0	P831_0050K302_0280 EZ501U	1840	1870	3230	139.4	17845/128	3800	3500	6000	3.3	4.0	2.0	128	55
22	617	682	13	1.8	P831_0050K302_0280 EZ402U	1840	1870	3230	139.4	17845/128	3800	3500	6000	2.0	4.0	2.0	128	55
22	905	1128	19	1.2	P831_0050K302_0280 EZ404U	1840	1870	3230	139.4	17845/128	3800	3500	6000	3.4	4.0	2.0	128	57
22	971	1049	20	1.1	P831_0050K302_0280 EZ502U	1840	1870	3230	139.4	17845/128	3800	3500	6000	5.6	4.0	2.0	128	56
22	971	1089	20	1.1	P831_0050K302_0280 EZ701U	1840	1870	3230	139.4	17845/128	3800	3500	6000	8.9	4.0	2.0	128	58

n_{2N} [rpm]	M_{2N} [Nm]	$M_{2,0}$ [Nm]	a_{th}	S	Type	M_{2acc} [Nm]	M_{2accHT} [Nm]	M_{2NOT} [Nm]	i	i_{exakt}	n_{1maxDB} EL1,2 [rpm]	n_{1maxDB} EL3,4,5,6 [rpm]	n_{1maxZB} [rpm]	J_1 [kgcm²]	$\Delta\varphi_2$ [arcmin]	$\Delta\varphi_{2red}$ [arcmin]	C_2 [Nm/arcmin]	m [kg]
P831K (n_{1N} = 3000 rpm, $M_{2acc,max}$ = 1840 Nm)																		
22	365	391	15	2.3	P831_0100K202_0140 EZ401U	1110	1110	2760	138.5	14405/104	3900	3500	5500	1.4	3.5	1.5	132	49
22	560	613	23	1.5	P831_0100K202_0140 EZ501U	1380	1380	2760	138.5	14405/104	3900	3500	5500	3.4	3.5	1.5	132	50
22	613	678	25	1.4	P831_0100K202_0140 EZ402U	1380	1380	2760	138.5	14405/104	3900	3500	5500	2.1	3.5	1.5	132	50
25	183	193	7.8	3.8	P831_0070K202_0175 EZ302U	580	580	920	122.3	3913/32	3900	3500	5500	0.67	3.5	1.5	128	47
25	238	252	10	2.9	P831_0070K202_0175 EZ303U	690	690	920	122.3	3913/32	3900	3500	5500	0.78	3.5	1.5	128	47
25	322	345	9.4	3.1	P831_0070K202_0175 EZ401U	980	980	2890	122.3	3913/32	3900	3500	5500	1.3	3.5	1.5	128	49
25	495	541	14	2.0	P831_0070K202_0175 EZ501U	1490	1490	2890	122.3	3913/32	3900	3500	5500	3.3	3.5	1.5	128	50
25	541	598	16	1.8	P831_0070K202_0175 EZ402U	1490	1490	2890	122.3	3913/32	3900	3500	5500	2.0	3.5	1.5	128	50
25	794	989	23	1.3	P831_0070K202_0175 EZ404U	1490	1490	2890	122.3	3913/32	3900	3500	5500	3.4	3.5	1.5	128	52
25	851	920	25	1.2	P831_0070K202_0175 EZ502U	1490	1490	2890	122.3	3913/32	3900	3500	5500	5.6	3.5	1.5	128	51
25	851	955	25	1.2	P831_0070K202_0175 EZ701U	1490	1490	2890	122.3	3913/32	3900	3500	5500	8.9	3.5	1.5	128	53
25	177	187	8.0	3.8	P831_0070K202_0170 EZ302U	560	560	890	118.0	20769/176	4000	3900	6500	0.57	3.5	1.5	128	47
25	230	243	10	2.9	P831_0070K202_0170 EZ303U	670	670	890	118.0	20769/176	4000	3900	6500	0.68	3.5	1.5	128	47
25	311	333	9.3	3.2	P831_0070K202_0170 EZ401U	940	940	2890	118.0	20769/176	4000	3900	6500	1.2	3.5	1.5	128	49
25	477	522	14	2.1	P831_0070K202_0170 EZ501U	1490	1490	2890	118.0	20769/176	4000	3900	6500	3.2	3.5	1.5	128	50
25	522	577	16	1.9	P831_0070K202_0170 EZ402U	1490	1490	2890	118.0	20769/176	4000	3900	6500	1.9	3.5	1.5	128	50
25	766	955	23	1.3	P831_0070K202_0170 EZ404U	1490	1490	2890	118.0	20769/176	4000	3900	6500	3.3	3.5	1.5	128	52
25	822	888	25	1.2	P831_0070K202_0170 EZ502U	1490	1490	2890	118.0	20769/176	4000	3900	6500	5.5	3.5	1.5	128	51
25	822	922	25	1.2	P831_0070K202_0170 EZ701U	1490	1490	2890	118.0	20769/176	4000	3900	6500	8.8	3.5	1.5	128	53
26	307	329	7.2	3.6	P831_0050K302_0230 EZ401U	930	930	3230	116.5	2795/24	3800	3500	6000	1.4	4.0	2.0	128	54
26	471	515	11	2.3	P831_0050K302_0230 EZ501U	1750	1750	3230	116.5	2795/24	3800	3500	6000	3.4	4.0	2.0	128	55
26	515	570	12	2.1	P831_0050K302_0230 EZ402U	1750	1750	3230	116.5	2795/24	3800	3500	6000	2.1	4.0	2.0	128	55
26	756	942	18	1.5	P831_0050K302_0230 EZ404U	1840	1870	3230	116.5	2795/24	3800	3500	6000	3.5	4.0	2.0	128	57
26	811	877	19	1.4	P831_0050K302_0230 EZ502U	1840	1870	3230	116.5	2795/24	3800	3500	6000	5.7	4.0	2.0	128	56
26	811	909	19	1.4	P831_0050K302_0230 EZ701U	1840	1870	3230	116.5	2795/24	3800	3500	6000	9.0	4.0	2.0	128	58
26	1063	1216	25	1.0	P831_0050K302_0230 EZ503U	1840	1870	3230	116.5	2795/24	3800	3500	6000	8.1	4.0	2.0	128	58
26	173	183	11	3.8	P831_0100K202_0115 EZ302U	540	540	870	115.5	6235/54	3500	3100	5000	0.97	3.5	1.5	132	47
26	225	238	14	2.9	P831_0100K202_0115 EZ303U	650	650	870	115.5	6235/54	3500	3100	5000	1.1	3.5	1.5	132	47
26	304	326	14	2.8	P831_0100K202_0115 EZ401U	920	920	2760	115.5	6235/54	3500	3100	5000	1.6	3.5	1.5	132	49
26	467	511	22	1.8	P831_0100K202_0115 EZ501U	1380	1380	2760	115.5	6235/54	3500	3100	5000	3.6	3.5	1.5	132	50
26	511	565	24	1.7	P831_0100K202_0115 EZ402U	1380	1380	2760	115.5	6235/54	3500	3100	5000	2.3	3.5	1.5	132	50
26	750	934	35	1.1	P831_0100K202_0115 EZ404U	1380	1380	2760	115.5	6235/54	3500	3100	5000	3.7	3.5	1.5	132	52
26	804	869	38	1.1	P831_0100K202_0115 EZ502U	1380	1380	2760	115.5	6235/54	3500	3100	5000	5.9	3.5	1.5	132	51
26	804	902	38	1.1	P831_0100K202_0115 EZ701U	1380	1380	2760	115.5	6235/54	3500	3100	5000	9.2	3.5	1.5	132	53
31	255	274	9.4	3.7	P831_0070K202_0140 EZ401U	780	780	2890	96.96	20167/208	3900	3500	5500	1.5	3.5	1.5	128	49
31	392	429	14	2.4	P831_0070K202_0140 EZ501U	1460	1460	2890	96.96	20167/208	3900	3500	5500	3.4	3.5	1.5	128	50
31	429	474	16	2.2	P831_0070K202_0140 EZ402U	1460	1460	2890	96.96	20167/208	3900	3500	5500	2.2	3.5	1.5	128	50
31	629	785	23	1.5	P831_0070K202_0140 EZ404U	1490	1490	2890	96.96	20167/208	3900	3500	5500	3.5	3.5	1.5	128	52
31	675	730	25	1.4	P831_0070K202_0140 EZ502U	1490	1490	2890	96.96	20167/208	3900	3500	5500	5.7	3.5	1.5	128	51
31	675	757	25	1.4	P831_0070K202_0140 EZ701U	1490	1490	2890	96.96	20167/208	3900	3500	5500	9.0	3.5	1.5	128	53
31	885	1013	32	1.1	P831_0070K202_0140 EZ503U	1490	1490	2890	96.96	20167/208	3900	3500	5500	8.1	3.5	1.5	128	53
33	242	259	13	3.5	P831_0100K202_0092 EZ401U	730	730	2760	91.90	11395/124	3500	3100	5000	1.9	3.5	1.5	132	49
33	372	406	21	2.3	P831_0100K202_0092 EZ501U	1380	1380	2760	91.90	11395/124	3500	3100	5000	3.9	3.5	1.5	132	50
33	406	450	23	2.1	P831_0100K202_0092 EZ402U	1380	1380	2760	91.90	11395/124	3500	3100	5000	2.6	3.5	1.5	132	50
33	597	744	33	1.4	P831_0100K202_0092 EZ404U	1380	1380	2760	91.90	11395/124	3500	3100	5000	3.9	3.5	1.5	132	52
33	640	692	36	1.3	P831_0100K202_0092 EZ502U	1380	1380	2760	91.90	11395/124	3500	3100	5000	6.2	3.5	1.5	132	51
33	640	718	36	1.3	P831_0100K202_0092 EZ701U	1380	1380	2760	91.90	11395/124	3500	3100	5000	9.5	3.5	1.5	132	53
33	839	960	47	1.0	P831_0100K202_0092 EZ503U	1380	1380	2760	91.90	11395/124	3500	3100	5000	8.5	3.5	1.5	132	53
34	133	141	9.8	3.8	P831_0070K202_0125 EZ302U	420	420	670	88.94	3913/44	3900	3500	5500	0.73	3.5	1.5	128	47
34	173	183	13	2.9	P831_0070K202_0125 EZ303U	500	500	670	88.94	3913/44	3900	3500	5500	0.84	3.5	1.5	128	47
34	234	251	9.4	3.9	P831_0070K202_0125 EZ401U	710	710	2670	88.94	3913/44	3900	3500	5500	1.4	3.5	1.5	128	49
34	360	393	15	2.6	P831_0070K202_0125 EZ501U	1340	1340	2670	88.94	3913/44	3900	3500	5500	3.3	3.5	1.5	128	50
34	393	435	16	2.3	P831_0070K202_0125 EZ402U	1340	1340	2670	88.94	3913/44	3900	3500	5500	2.1	3.5	1.5	128	50
34	577	720	23	1.6	P831_0070K202_0125 EZ404U	1490	1490	2670	88.94	3913/44	3900	3500	5500	3.4	3.5	1.5	128	52
34	619	669	25	1.5	P831_0070K202_0125 EZ502U	1490	1490	2670	88.94	3913/44	3900	3500	5500	5.6	3.5	1.5	128	51
34	619	695	25	1.5	P831_0070K202_0125 EZ701U	1490	1490	2890	88.94	3913/44	3900	3500	5500	8.9	3.5	1.5	128	53
34	812	929	33	1.1	P831_0070K202_0125 EZ503U	1490	1490	2670	88.94	3913/44	3900	3500	5500	8.0	3.5	1.5	128	53
35	228	244	6.7	4.8	P831_0050K302_0175 EZ401U	690	690	2590	86.47	7955/92	3500	3100	5000	1.7	4.0	2.0	128	54
35	350	382	10	3.1	P831_0050K302_0175 EZ501U	1300	1300	2590	86.47	7955/92	3500	3100	5000	3.7	4.0	2.0	128	55
35	382	423	11	2.9	P831_0050K302_0175 EZ402U	1300	1300	2590	86.47	7955/92	3500	3100	5000	2.4	4.0	2.0	128	55
35	561	700	17	2.0	P831_0050K302_0175 EZ404U	1840	1870	2590	86.47	7955/92	3500	3100	5000	3.8	4.0	2.0	128	57
35	602	651	18	1.8	P831_0050K302_0175 EZ502U	1840	1870	2590	86.47	7955/92	3500	3100	5000	6.0	4.0	2.0	128	56
35	602	675	18	1.8	P831_0050K302_0175 EZ701U	1630	1630	3230	86.47	7955/92	3500	3100	5000	9.3	4.0	2.0	128	58
35	789	903	23	1.4	P831_0050K302_0175 EZ503U	1840	1870	2590	86.47	7955/92	3500	3100	5000	8.4	4.0	2.0	128	58

n_{2N} [rpm]	M_{2N} [Nm]	$M_{2,0}$ [Nm]	a_{th}	S	Type	M_{2acc} [Nm]	M_{2accHT} [Nm]	M_{2NOT} [Nm]	i	i_{exakt}	n_{1maxDB} EL1,2 [rpm]	n_{1maxDB} EL3,4,5,6 [rpm]	n_{1maxZB} [rpm]	J_1 [kgcm²]	$\Delta\varphi_2$ [arcmin]	$\Delta\varphi_{2red}$ [arcmin]	C_2 [Nm/arcmin]	m [kg]
P831K (n_{1N} = 3000 rpm, $M_{2acc,max}$ = 1840 Nm)																		
35	976	1172	29	1.1	P831_0050K302_0175 EZ702U	1840	1870	3230	86.47	7955/92	3500	3100	5000	15	4.0	2.0	128	61
35	1098	1302	32	1.0	P831_0050K302_0175 EZ505U	1840	1870	3230	86.47	7955/92	3500	3100	5000	13	4.0	2.0	128	61
36	164	173	17	2.9	P831_0100K202_0084 EZ303U	470	470	630	83.97	24940/297	3500	3100	5000	1.2	3.5	1.5	132	47
36	221	237	13	3.8	P831_0100K202_0084 EZ401U	670	670	2520	83.97	24940/297	3500	3100	5000	1.7	3.5	1.5	132	49
36	340	371	20	2.5	P831_0100K202_0084 EZ501U	1260	1260	2520	83.97	24940/297	3500	3100	5000	3.7	3.5	1.5	132	50
36	371	411	22	2.3	P831_0100K202_0084 EZ402U	1260	1260	2520	83.97	24940/297	3500	3100	5000	2.4	3.5	1.5	132	50
36	545	679	33	1.6	P831_0100K202_0084 EZ404U	1380	1380	2520	83.97	24940/297	3500	3100	5000	3.8	3.5	1.5	132	52
36	585	632	35	1.5	P831_0100K202_0084 EZ502U	1380	1380	2520	83.97	24940/297	3500	3100	5000	6.0	3.5	1.5	132	51
36	585	656	35	1.5	P831_0100K202_0084 EZ701U	1380	1380	2760	83.97	24940/297	3500	3100	5000	9.3	3.5	1.5	132	53
36	766	877	46	1.1	P831_0100K202_0084 EZ503U	1380	1380	2520	83.97	24940/297	3500	3100	5000	8.4	3.5	1.5	132	53
37	121	128	11	3.8	P831_0070K202_0115 EZ302U	380	380	610	80.82	8729/108	3500	3100	5000	0.99	3.5	1.5	128	47
37	157	167	14	2.9	P831_0070K202_0115 EZ303U	460	460	610	80.82	8729/108	3500	3100	5000	1.1	3.5	1.5	128	47
37	213	228	9.5	4.2	P831_0070K202_0115 EZ401U	650	650	2430	80.82	8729/108	3500	3100	5000	1.6	3.5	1.5	128	49
37	327	357	15	2.7	P831_0070K202_0115 EZ501U	1220	1220	2430	80.82	8729/108	3500	3100	5000	3.6	3.5	1.5	128	50
37	357	395	16	2.5	P831_0070K202_0115 EZ402U	1220	1220	2430	80.82	8729/108	3500	3100	5000	2.3	3.5	1.5	128	50
37	525	654	23	1.7	P831_0070K202_0115 EZ404U	1490	1490	2430	80.82	8729/108	3500	3100	5000	3.7	3.5	1.5	128	52
37	563	608	25	1.6	P831_0070K202_0115 EZ502U	1490	1490	2430	80.82	8729/108	3500	3100	5000	5.9	3.5	1.5	128	51
37	563	631	25	1.6	P831_0070K202_0115 EZ701U	1490	1490	2890	80.82	8729/108	3500	3100	5000	9.2	3.5	1.5	128	53
37	738	844	33	1.2	P831_0070K202_0115 EZ503U	1490	1490	2430	80.82	8729/108	3500	3100	5000	8.3	3.5	1.5	128	53
43	186	199	9.6	4.6	P831_0070K202_0100 EZ401U	560	560	2120	70.51	20167/286	3900	3500	5500	1.6	3.5	1.5	128	49
43	285	312	15	3.0	P831_0070K202_0100 EZ501U	1060	1060	2120	70.51	20167/286	3900	3500	5500	3.5	3.5	1.5	128	50
43	312	345	16	2.7	P831_0070K202_0100 EZ402U	1060	1060	2120	70.51	20167/286	3900	3500	5500	2.3	3.5	1.5	128	50
43	458	571	24	1.9	P831_0070K202_0100 EZ404U	1490	1490	2120	70.51	20167/286	3900	3500	5500	3.6	3.5	1.5	128	52
43	491	531	25	1.7	P831_0070K202_0100 EZ502U	1490	1490	2120	70.51	20167/286	3900	3500	5500	5.8	3.5	1.5	128	51
43	491	551	25	1.7	P831_0070K202_0100 EZ701U	1330	1330	2890	70.51	20167/286	3900	3500	5500	9.1	3.5	1.5	128	53
43	644	736	33	1.3	P831_0070K202_0100 EZ503U	1490	1490	2120	70.51	20167/286	3900	3500	5500	8.2	3.5	1.5	128	53
43	796	955	41	1.1	P831_0070K202_0100 EZ702U	1490	1490	2890	70.51	20167/286	3900	3500	5500	14	3.5	1.5	128	56
43	282	308	9.8	3.9	P831_0050K302_0140 EZ501U	1050	1050	2090	69.68	7525/108	3500	3100	5000	4.0	4.0	2.0	128	55
43	308	341	11	3.6	P831_0050K302_0140 EZ402U	1050	1050	2090	69.68	7525/108	3500	3100	5000	2.7	4.0	2.0	128	55
43	452	564	16	2.4	P831_0050K302_0140 EZ404U	1570	1570	2090	69.68	7525/108	3500	3100	5000	4.1	4.0	2.0	128	57
43	485	524	17	2.3	P831_0050K302_0140 EZ502U	1570	1570	2090	69.68	7525/108	3500	3100	5000	6.3	4.0	2.0	128	56
43	485	544	17	2.3	P831_0050K302_0140 EZ701U	1310	1310	3230	69.68	7525/108	3500	3100	5000	9.6	4.0	2.0	128	58
43	636	728	22	1.7	P831_0050K302_0140 EZ503U	1570	1570	2090	69.68	7525/108	3500	3100	5000	8.7	4.0	2.0	128	58
43	787	944	27	1.4	P831_0050K302_0140 EZ702U	1840	1870	3230	69.68	7525/108	3500	3100	5000	15	4.0	2.0	128	61
43	885	1049	31	1.2	P831_0050K302_0140 EZ505U	1840	1870	3230	69.68	7525/108	3500	3100	5000	13	4.0	2.0	128	61
43	1082	1364	37	1.0	P831_0050K302_0140 EZ703U	1840	1870	3230	69.68	7525/108	3500	3100	5000	23	4.0	2.0	128	63
45	176	189	12	4.8	P831_0100K202_0067 EZ401U	530	530	2010	66.83	22790/341	3500	3100	5000	2.1	3.5	1.5	132	49
45	270	296	19	3.1	P831_0100K202_0067 EZ501U	1010	1010	2010	66.83	22790/341	3500	3100	5000	4.1	3.5	1.5	132	50
45	296	327	21	2.9	P831_0100K202_0067 EZ402U	1010	1010	2010	66.83	22790/341	3500	3100	5000	2.8	3.5	1.5	132	50
45	434	541	31	2.0	P831_0100K202_0067 EZ404U	1380	1380	2010	66.83	22790/341	3500	3100	5000	4.1	3.5	1.5	132	52
45	465	503	33	1.8	P831_0100K202_0067 EZ502U	1380	1380	2010	66.83	22790/341	3500	3100	5000	6.4	3.5	1.5	132	51
45	465	522	33	1.8	P831_0100K202_0067 EZ701U	1260	1260	2760	66.83	22790/341	3500	3100	5000	9.7	3.5	1.5	132	53
45	610	698	43	1.4	P831_0100K202_0067 EZ503U	1380	1380	2010	66.83	22790/341	3500	3100	5000	8.7	3.5	1.5	132	53
45	755	905	53	1.1	P831_0100K202_0067 EZ702U	1380	1380	2760	66.83	22790/341	3500	3100	5000	15	3.5	1.5	132	56
45	849	1006	60	1.0	P831_0100K202_0067 EZ505U	1380	1380	2760	66.83	22790/341	3500	3100	5000	13	3.5	1.5	132	56
47	169	182	9.7	4.9	P831_0070K202_0092 EZ401U	510	510	1930	64.33	15953/248	3500	3100	5000	1.9	3.5	1.5	128	49
47	260	284	15	3.2	P831_0070K202_0092 EZ501U	970	970	1930	64.33	15953/248	3500	3100	5000	3.9	3.5	1.5	128	50
47	284	315	16	2.9	P831_0070K202_0092 EZ402U	970	970	1930	64.33	15953/248	3500	3100	5000	2.6	3.5	1.5	128	50
47	418	521	24	2.0	P831_0070K202_0092 EZ404U	1450	1450	1930	64.33	15953/248	3500	3100	5000	4.0	3.5	1.5	128	52
47	448	484	26	1.8	P831_0070K202_0092 EZ502U	1450	1450	1930	64.33	15953/248	3500	3100	5000	6.2	3.5	1.5	128	51
47	448	502	26	1.8	P831_0070K202_0092 EZ701U	1210	1210	2890	64.33	15953/248	3500	3100	5000	9.5	3.5	1.5	128	53
47	587	672	34	1.4	P831_0070K202_0092 EZ503U	1450	1450	1930	64.33	15953/248	3500	3100	5000	8.6	3.5	1.5	128	53
47	726	872	42	1.1	P831_0070K202_0092 EZ702U	1490	1490	2890	64.33	15953/248	3500	3100	5000	15	3.5	1.5	128	56
47	817	968	47	1.0	P831_0070K202_0092 EZ505U	1490	1490	2890	64.33	15953/248	3500	3100	5000	13	3.5	1.5	128	56
50	243	265	19	3.5	P831_0100K202_0060 EZ501U	900	900	1800	60.00	60/1	3000	2600	4500	4.7	3.5	1.5	132	50
50	265	294	20	3.2	P831_0100K202_0060 EZ402U	900	900	1800	60.00	60/1	3000	2600	4500	3.4	3.5	1.5	132	50
50	390	486	30	2.2	P831_0100K202_0060 EZ404U	1350	1350	1800	60.00	60/1	3000	2600	4500	4.7	3.5	1.5	132	52
50	418	452	32	2.0	P831_0100K202_0060 EZ502U	1350	1350	1800	60.00	60/1	3000	2600	4500	7.0	3.5	1.5	132	51
50	418	469	32	2.0	P831_0100K202_0060 EZ701U	1130	1130	2760	60.00	60/1	3000	2600	4500	10	3.5	1.5	132	53
50	548	627	42	1.6	P831_0100K202_0060 EZ503U	1350	1350	1800	60.00	60/1	3000	2600	4500	9.3	3.5	1.5	132	53
50	677	813	52	1.3	P831_0100K202_0060 EZ702U	1380	1380	2760	60.00	60/1	3000	2600	4500	15	3.5	1.5	132	56
50	762	903	58	1.1	P831_0100K202_0060 EZ505U	1380	1380	2760	60.00	60/1	3000	2600	4500	14	3.5	1.5	132	56
51	114	121	17	2.9	P831_0070K202_0084 EZ303U	330	330	440	58.78	17458/297	3500	3100	5000	1.2	3.5	1.5	128	47
51	238	260	15	3.4	P831_0070K202_0084 EZ501U	880	880	1760	58.78	17458/297	3500	3100	5000	3.7	3.5	1.5	128	50

n_{2N} [rpm]	M_{2N} [Nm]	$M_{2,0}$ [Nm]	a_{th}	S	Type	M_{2acc} [Nm]	M_{2accHT} [Nm]	M_{2NOT} [Nm]	i	i_{exakt}	n_{1maxDB} EL1,2 [rpm]	n_{1maxDB} EL3,4,5,6 [rpm]	n_{1maxZB} [rpm]	J_1 [kgcm²]	$\Delta\varphi_2$ [arcmin]	$\Delta\varphi_{2red}$ [arcmin]	C_2 [Nm/arcmin]	m [kg]
P831K (n_{1N} = 3000 rpm, $M_{2acc,max}$ = 1840 Nm)																		
51	260	288	16	3.1	P831_0070K202_0084 EZ402U	880	880	1760	58.78	17458/297	3500	3100	5000	2.5	3.5	1.5	128	50
51	382	476	24	2.1	P831_0070K202_0084 EZ404U	1330	1330	1760	58.78	17458/297	3500	3100	5000	3.8	3.5	1.5	128	52
51	409	442	26	2.0	P831_0070K202_0084 EZ502U	1330	1330	1760	58.78	17458/297	3500	3100	5000	6.0	3.5	1.5	128	51
51	409	459	26	2.0	P831_0070K202_0084 EZ701U	1110	1110	2890	58.78	17458/297	3500	3100	5000	9.3	3.5	1.5	128	53
51	536	614	34	1.5	P831_0070K202_0084 EZ503U	1330	1330	1760	58.78	17458/297	3500	3100	5000	8.4	3.5	1.5	128	53
51	664	796	42	1.2	P831_0070K202_0084 EZ702U	1490	1490	2890	58.78	17458/297	3500	3100	5000	15	3.5	1.5	128	56
51	747	885	47	1.1	P831_0070K202_0084 EZ505U	1490	1490	2890	58.78	17458/297	3500	3100	5000	13	3.5	1.5	128	56
52	235	257	9.3	4.7	P831_0050K302_0115 EZ501U	870	870	1740	58.05	1161/20	3200	2800	4500	4.4	4.0	2.0	128	55
52	257	284	10	4.3	P831_0050K302_0115 EZ402U	870	870	1740	58.05	1161/20	3200	2800	4500	3.1	4.0	2.0	128	55
52	377	470	15	2.9	P831_0050K302_0115 EZ404U	1310	1310	1740	58.05	1161/20	3200	2800	4500	4.4	4.0	2.0	128	57
52	404	437	16	2.7	P831_0050K302_0115 EZ502U	1310	1310	1740	58.05	1161/20	3200	2800	4500	6.7	4.0	2.0	128	56
52	404	453	16	2.7	P831_0050K302_0115 EZ701U	1090	1090	3230	58.05	1161/20	3200	2800	4500	10	4.0	2.0	128	58
52	530	606	21	2.1	P831_0050K302_0115 EZ503U	1310	1310	1740	58.05	1161/20	3200	2800	4500	9.0	4.0	2.0	128	58
52	655	787	26	1.7	P831_0050K302_0115 EZ702U	1840	1870	3230	58.05	1161/20	3200	2800	4500	15	4.0	2.0	128	61
52	737	874	29	1.5	P831_0050K302_0115 EZ505U	1840	1870	3230	58.05	1161/20	3200	2800	4500	14	4.0	2.0	128	61
52	901	1136	36	1.2	P831_0050K302_0115 EZ703U	1840	1870	3230	58.05	1161/20	3200	2800	4500	23	4.0	2.0	128	63
58	360	404	31	2.4	P831_0100K202_0052 EZ701U	970	970	2760	51.77	21070/407	3000	2600	4500	10	3.5	1.5	132	53
58	585	701	50	1.5	P831_0100K202_0052 EZ702U	1380	1380	2760	51.77	21070/407	3000	2600	4500	15	3.5	1.5	132	56
58	658	779	56	1.3	P831_0100K202_0052 EZ505U	1380	1380	2760	51.77	21070/407	3000	2600	4500	14	3.5	1.5	132	56
58	804	1013	69	1.1	P831_0100K202_0052 EZ703U	1380	1380	2760	51.77	21070/407	3000	2600	4500	23	3.5	1.5	132	58
60	347	389	26	2.2	P831_0070K202_0071 EZ701U	940	940	2890	49.83	14749/296	3000	2600	4500	10	3.5	1.5	128	53
60	563	675	42	1.4	P831_0070K202_0071 EZ702U	1440	1440	2890	49.83	14749/296	3000	2600	4500	15	3.5	1.5	128	56
60	633	750	48	1.2	P831_0070K202_0071 EZ505U	1440	1440	2890	49.83	14749/296	3000	2600	4500	14	3.5	1.5	128	56
64	189	207	15	3.9	P831_0070K202_0067 EZ501U	700	700	1400	46.78	15953/341	3500	3100	5000	4.1	3.5	1.5	128	50
64	207	229	17	3.6	P831_0070K202_0067 EZ402U	700	700	1400	46.78	15953/341	3500	3100	5000	2.8	3.5	1.5	128	50
64	304	379	25	2.4	P831_0070K202_0067 EZ404U	1060	1060	1400	46.78	15953/341	3500	3100	5000	4.2	3.5	1.5	128	52
64	326	352	26	2.3	P831_0070K202_0067 EZ502U	1060	1060	1400	46.78	15953/341	3500	3100	5000	6.4	3.5	1.5	128	51
64	326	365	26	2.3	P831_0070K202_0067 EZ701U	880	880	2890	46.78	15953/341	3500	3100	5000	9.7	3.5	1.5	128	53
64	427	489	35	1.7	P831_0070K202_0067 EZ503U	1060	1060	1400	46.78	15953/341	3500	3100	5000	8.8	3.5	1.5	128	53
64	528	634	43	1.4	P831_0070K202_0067 EZ702U	1410	1410	2890	46.78	15953/341	3500	3100	5000	15	3.5	1.5	128	56
64	594	704	48	1.3	P831_0070K202_0067 EZ505U	1410	1410	2890	46.78	15953/341	3500	3100	5000	13	3.5	1.5	128	56
64	726	916	59	1.0	P831_0070K202_0067 EZ703U	1410	1410	2890	46.78	15953/341	3500	3100	5000	23	3.5	1.5	128	58
65	323	362	16	3.2	P831_0050K302_0093 EZ701U	870	870	3230	46.34	5375/116	3200	2800	4500	11	4.0	2.0	128	58
65	523	628	26	2.0	P831_0050K302_0093 EZ702U	1790	1790	3230	46.34	5375/116	3200	2800	4500	16	4.0	2.0	128	61
65	589	698	29	1.8	P831_0050K302_0093 EZ505U	1840	1870	3230	46.34	5375/116	3200	2800	4500	14	4.0	2.0	128	61
65	719	907	36	1.4	P831_0050K302_0093 EZ703U	1840	1870	3230	46.34	5375/116	3200	2800	4500	24	4.0	2.0	128	63
71	170	186	15	4.2	P831_0070K202_0060 EZ501U	630	630	1260	42.00	42/1	3000	2600	4500	4.7	3.5	1.5	128	50
71	186	205	17	3.9	P831_0070K202_0060 EZ402U	630	630	1260	42.00	42/1	3000	2600	4500	3.5	3.5	1.5	128	50
71	273	340	25	2.6	P831_0070K202_0060 EZ404U	950	950	1260	42.00	42/1	3000	2600	4500	4.8	3.5	1.5	128	52
71	292	316	27	2.5	P831_0070K202_0060 EZ502U	950	950	1260	42.00	42/1	3000	2600	4500	7.0	3.5	1.5	128	51
71	292	328	27	2.5	P831_0070K202_0060 EZ701U	790	790	2890	42.00	42/1	3000	2600	4500	10	3.5	1.5	128	53
71	383	439	35	1.9	P831_0070K202_0060 EZ503U	950	950	1260	42.00	42/1	3000	2600	4500	9.4	3.5	1.5	128	53
71	474	569	43	1.5	P831_0070K202_0060 EZ702U	1360	1360	2890	42.00	42/1	3000	2600	4500	16	3.5	1.5	128	56
71	533	632	48	1.3	P831_0070K202_0060 EZ505U	1360	1360	2890	42.00	42/1	3000	2600	4500	14	3.5	1.5	128	56
71	652	822	59	1.1	P831_0070K202_0060 EZ703U	1360	1360	2890	42.00	42/1	3000	2600	4500	23	3.5	1.5	128	58
75	279	312	29	3.1	P831_0100K202_0040 EZ701U	750	750	2760	40.00	40/1	3000	2600	4500	11	3.5	1.5	132	53
75	452	542	47	1.9	P831_0100K202_0040 EZ702U	1380	1380	2760	40.00	40/1	3000	2600	4500	16	3.5	1.5	132	56
75	508	602	53	1.7	P831_0100K202_0040 EZ505U	1380	1380	2760	40.00	40/1	3000	2600	4500	15	3.5	1.5	132	56
75	621	783	65	1.4	P831_0100K202_0040 EZ703U	1380	1380	2760	40.00	40/1	3000	2600	4500	24	3.5	1.5	132	58
81	257	289	16	3.7	P831_0050K302_0074 EZ701U	700	700	2770	36.96	2365/64	2700	2300	4000	11	4.0	2.0	128	58
81	417	501	27	2.3	P831_0050K302_0074 EZ702U	1430	1430	2770	36.96	2365/64	2700	2300	4000	17	4.0	2.0	128	61
81	469	556	30	2.1	P831_0050K302_0074 EZ505U	1820	1820	2770	36.96	2365/64	2700	2300	4000	15	4.0	2.0	128	61
81	574	723	37	1.7	P831_0050K302_0074 EZ703U	1820	1820	2770	36.96	2365/64	2700	2300	4000	24	4.0	2.0	128	63
83	252	283	27	2.7	P831_0070K202_0052 EZ701U	680	680	2720	36.24	14749/407	3000	2600	4500	10	3.5	1.5	128	53
83	409	491	44	1.7	P831_0070K202_0052 EZ702U	1290	1290	2720	36.24	14749/407	3000	2600	4500	16	3.5	1.5	128	56
83	460	546	49	1.5	P831_0070K202_0052 EZ505U	1290	1290	2720	36.24	14749/407	3000	2600	4500	14	3.5	1.5	128	56
83	563	709	60	1.2	P831_0070K202_0052 EZ703U	1290	1290	2720	36.24	14749/407	3000	2600	4500	23	3.5	1.5	128	58
98	135	149	17	4.8	P831_0070K202_0044 EZ402U	460	460	920	30.55	336/11	3000	2600	4500	4.0	3.5	1.5	128	50
98	198	247	25	3.3	P831_0070K202_0044 EZ404U	690	690	920	30.55	336/11	3000	2600	4500	5.4	3.5	1.5	128	52
98	213	230	27	3.0	P831_0070K202_0044 EZ502U	690	690	920	30.55	336/11	3000	2600	4500	7.6	3.5	1.5	128	51
98	213	239	27	3.0	P831_0070K202_0044 EZ701U	570	570	2290	30.55	336/11	3000	2600	4500	11	3.5	1.5	128	53
98	279	319	36	2.3	P831_0070K202_0044 EZ503U	690	690	920	30.55	336/11	3000	2600	4500	10	3.5	1.5	128	53
98	345	414	44	1.9	P831_0070K202_0044 EZ702U	1180	1180	2290	30.55	336/11	3000	2600	4500	16	3.5	1.5	128	56
98	388	460	50	1.7	P831_0070K202_0044 EZ505U	1220	1220	2290	30.55	336/11	3000	2600	4500	15	3.5	1.5	128	56

n_{2N} [rpm]	M_{2N} [Nm]	$M_{2,0}$ [Nm]	a_{th}	S	Type	M_{2acc} [Nm]	M_{2accHT} [Nm]	M_{2NOT} [Nm]	i	i_{exakt}	n_{1maxDB} EL1,2 [rpm]	n_{1maxDB} EL3,4,5,6 [rpm]	n_{1maxZB} [rpm]	J_1 [kgcm²]	$\Delta\varphi_2$ [arcmin]	$\Delta\varphi_{2red}$ [arcmin]	C_2 [Nm/arcmin]	m [kg]
P831K (n_{1N} = 3000 rpm, $M_{2acc,max}$ = 1840 Nm)																		
98	474	598	61	1.4	P831_0070K202_0044 EZ703U	1220	1220	2290	30.55	336/11	3000	2600	4500	24	3.5	1.5	128	58
100	209	234	17	4.3	P831_0050K302_0060 EZ701U	560	560	2250	30.00	30/1	2700	2300	4000	12	4.0	2.0	128	58
100	339	406	27	2.7	P831_0050K302_0060 EZ702U	1160	1160	2250	30.00	30/1	2700	2300	4000	18	4.0	2.0	128	61
100	381	452	30	2.4	P831_0050K302_0060 EZ505U	1690	1690	2250	30.00	30/1	2700	2300	4000	16	4.0	2.0	128	61
100	466	587	37	1.9	P831_0050K302_0060 EZ703U	1690	1690	2250	30.00	30/1	2700	2300	4000	25	4.0	2.0	128	63
100	601	852	48	1.5	P831_0050K302_0060 EZ705U	1700	1700	3230	30.00	30/1	2700	2300	4000	38	4.0	2.0	128	68
107	195	219	27	3.2	P831_0070K202_0040 EZ701U	530	530	2100	28.00	28/1	3000	2600	4500	11	3.5	1.5	128	53
107	316	379	45	2.0	P831_0070K202_0040 EZ702U	1080	1080	2100	28.00	28/1	3000	2600	4500	16	3.5	1.5	128	56
107	356	422	50	1.8	P831_0070K202_0040 EZ505U	1180	1180	2100	28.00	28/1	3000	2600	4500	15	3.5	1.5	128	56
107	435	548	61	1.4	P831_0070K202_0040 EZ703U	1180	1180	2100	28.00	28/1	3000	2600	4500	24	3.5	1.5	128	58
112	187	210	17	4.6	P831_0050K302_0054 EZ701U	510	510	2020	26.88	215/8	2700	2300	4000	12	4.0	2.0	128	58
112	303	364	27	2.9	P831_0050K302_0054 EZ702U	1040	1040	2020	26.88	215/8	2700	2300	4000	17	4.0	2.0	128	61
112	341	405	31	2.5	P831_0050K302_0054 EZ505U	1520	1520	2020	26.88	215/8	2700	2300	4000	16	4.0	2.0	128	61
112	417	526	38	2.1	P831_0050K302_0054 EZ703U	1520	1520	2020	26.88	215/8	2700	2300	4000	25	4.0	2.0	128	63
150	226	271	28	3.5	P831_0050K302_0040 EZ702U	770	770	1500	20.00	20/1	2700	2300	4000	19	4.0	2.0	128	61
150	254	301	31	3.1	P831_0050K302_0040 EZ505U	1130	1130	1500	20.00	20/1	2700	2300	4000	18	4.0	2.0	128	61
150	310	391	38	2.5	P831_0050K302_0040 EZ703U	1130	1130	1500	20.00	20/1	2700	2300	4000	27	4.0	2.0	128	63
150	401	568	50	2.0	P831_0050K302_0040 EZ705U	1480	1480	3230	20.00	20/1	2700	2300	4000	40	4.0	2.0	128	68
188	181	217	28	3.5	P831_0040K302_0040 EZ702U	620	620	1200	16.00	16/1	2700	2300	4000	20	4.0	2.0	109	61
188	203	241	31	3.1	P831_0040K302_0040 EZ505U	900	900	1200	16.00	16/1	2700	2300	4000	18	4.0	2.0	109	61
188	248	313	38	2.5	P831_0040K302_0040 EZ703U	900	900	1200	16.00	16/1	2700	2300	4000	28	4.0	2.0	109	63
188	321	455	50	2.0	P831_0040K302_0040 EZ705U	1190	1190	2890	16.00	16/1	2700	2300	4000	40	4.0	2.0	109	68
250	135	163	28	3.5	P831_0030K302_0040 EZ702U	460	460	900	12.00	12/1	2700	2300	4000	21	4.5	2.5	83	61
250	152	181	31	3.1	P831_0030K302_0040 EZ505U	680	680	900	12.00	12/1	2700	2300	4000	20	4.5	2.5	83	61
250	186	235	38	2.5	P831_0030K302_0040 EZ703U	680	680	900	12.00	12/1	2700	2300	4000	29	4.5	2.5	83	63
250	240	341	50	2.0	P831_0030K302_0040 EZ705U	890	890	2160	12.00	12/1	2700	2300	4000	42	4.5	2.5	83	68
P831K (n_{1N} = 4500 rpm, $M_{2acc,max}$ = 1840 Nm)																		
52	773	1245	23	1.4	P831_0050K302_0175 EZ505U	1840	1870	3230	86.47	7955/92	3500	3100	5000	13	4.0	2.0	128	61
64	630	1015	37	1.2	P831_0070K202_0100 EZ505U	1490	1490	2890	70.51	20167/286	3900	3500	5500	13	3.5	1.5	128	56
65	623	1003	23	1.7	P831_0050K302_0140 EZ505U	1840	1870	3230	69.68	7525/108	3500	3100	5000	13	4.0	2.0	128	61
65	793	1311	29	1.3	P831_0050K302_0140 EZ703U	1840	1870	3230	69.68	7525/108	3500	3100	5000	23	4.0	2.0	128	63
67	597	962	42	1.4	P831_0100K202_0067 EZ505U	1380	1380	2760	66.83	22790/341	3500	3100	5000	13	3.5	1.5	132	56
70	575	926	38	1.3	P831_0070K202_0092 EZ505U	1490	1490	2890	64.33	15953/248	3500	3100	5000	13	3.5	1.5	128	56
75	536	864	41	1.6	P831_0100K202_0060 EZ505U	1380	1380	2760	60.00	60/1	3000	2600	4500	14	3.5	1.5	132	56
77	525	846	38	1.3	P831_0070K202_0084 EZ505U	1490	1490	2890	58.78	17458/297	3500	3100	5000	13	3.5	1.5	128	56
77	669	1106	48	1.0	P831_0070K202_0084 EZ703U	1490	1490	2890	58.78	17458/297	3500	3100	5000	22	3.5	1.5	128	58
78	519	836	23	1.9	P831_0050K302_0115 EZ505U	1840	1870	3230	58.05	1161/20	3200	2800	4500	14	4.0	2.0	128	61
78	661	1092	30	1.5	P831_0050K302_0115 EZ703U	1840	1870	3230	58.05	1161/20	3200	2800	4500	23	4.0	2.0	128	63
87	463	745	40	1.8	P831_0100K202_0052 EZ505U	1380	1380	2760	51.77	21070/407	3000	2600	4500	14	3.5	1.5	132	56
87	589	974	51	1.4	P831_0100K202_0052 EZ703U	1380	1380	2760	51.77	21070/407	3000	2600	4500	23	3.5	1.5	132	58
90	445	717	39	1.5	P831_0070K202_0071 EZ505U	1440	1440	2890	49.83	14749/296	3000	2600	4500	14	3.5	1.5	128	56
90	567	938	49	1.2	P831_0070K202_0071 EZ703U	1440	1440	2890	49.83	14749/296	3000	2600	4500	23	3.5	1.5	128	58
96	418	673	39	1.6	P831_0070K202_0067 EZ505U	1410	1410	2890	46.78	15953/341	3500	3100	5000	13	3.5	1.5	128	56
96	533	880	49	1.2	P831_0070K202_0067 EZ703U	1410	1410	2890	46.78	15953/341	3500	3100	5000	23	3.5	1.5	128	58
97	414	667	24	2.2	P831_0050K302_0093 EZ505U	1840	1870	3230	46.34	5375/116	3200	2800	4500	14	4.0	2.0	128	61
97	528	872	30	1.7	P831_0050K302_0093 EZ703U	1840	1870	3230	46.34	5375/116	3200	2800	4500	24	4.0	2.0	128	63
107	375	605	39	1.7	P831_0070K202_0060 EZ505U	1360	1360	2890	42.00	42/1	3000	2600	4500	14	3.5	1.5	128	56
107	478	790	50	1.3	P831_0070K202_0060 EZ703U	1360	1360	2890	42.00	42/1	3000	2600	4500	23	3.5	1.5	128	58
113	358	576	40	2.2	P831_0100K202_0040 EZ505U	1380	1380	2760	40.00	40/1	3000	2600	4500	15	3.5	1.5	132	56
113	455	753	51	1.7	P831_0100K202_0040 EZ703U	1380	1380	2760	40.00	40/1	3000	2600	4500	24	3.5	1.5	132	58
124	324	522	40	1.8	P831_0070K202_0052 EZ505U	1290	1290	2720	36.24	14749/407	3000	2600	4500	14	3.5	1.5	128	56
124	413	682	50	1.4	P831_0070K202_0052 EZ703U	1290	1290	2720	36.24	14749/407	3000	2600	4500	23	3.5	1.5	128	58
147	273	440	40	2.1	P831_0070K202_0044 EZ505U	1220	1220	2290	30.55	336/11	3000	2600	4500	15	3.5	1.5	128	56
147	348	575	51	1.6	P831_0070K202_0044 EZ703U	1220	1220	2290	30.55	336/11	3000	2600	4500	24	3.5	1.5	128	58
161	250	403	40	2.2	P831_0070K202_0040 EZ505U	1180	1180	2100	28.00	28/1	3000	2600	4500	15	3.5	1.5	128	56
161	319	527	51	1.7	P831_0070K202_0040 EZ703U	1180	1180	2100	28.00	28/1	3000	2600	4500	24	3.5	1.5	128	58
P831K (n_{1N} = 6000 rpm, $M_{2acc,max}$ = 1840 Nm)																		
11	784	878	11	1.1	P831_0100K202_0560 EZ302U	1380	1380	2760	555.4	6665/12	4000	3900	6500	0.34	3.5	1.5	132	47
12	686	768	7.9	1.3	P831_0070K202_0690 EZ302U	1080	1080	1840	486.0	46655/96	4000	3900	6500	0.33	3.5	1.5	128	47
13	652	731	11	1.3	P831_0100K202_0460 EZ302U	1380	1380	2660	462.3	1849/4	4000	3900	6500	0.36	3.5	1.5	132	47
15	549	615	6.7	1.8	P831_0070K202_0560 EZ302U	1290	1290	1960	388.8	9331/24	4000	3900	6500	0.35	3.5	1.5	128	47
15	717	823	8.8	1.4	P831_0070K202_0560 EZ303U	1290	1290	1960	388.8	9331/24	4000	3900	6500	0.46	3.5	1.5	128	47
17	499	559	10	1.3	P831_0070K202_0500 EZ302U	780	780	1340	353.4	46655/132	4000	3900	6500	0.33	3.5	1.5	128	47
17	488	546	10	1.7	P831_0100K202_0350 EZ302U	1380	1380	2210	345.5	9675/28	4000	3900	6500	0.41	3.5	1.5	132	47

n_{2N} [rpm]	M_{2N} [Nm]	$M_{2,0}$ [Nm]	a_{th}	S	Type	M_{2acc} [Nm]	M_{2accHT} [Nm]	M_{2NOT} [Nm]	i	i_{exakt}	n_{1maxDB} EL1,2 [rpm]	n_{1maxDB} EL3,4,5,6 [rpm]	n_{1maxZB} [rpm]	J_1 [kgcm²]	$\Delta\varphi_2$ [arcmin]	$\Delta\varphi_{2red}$ [arcmin]	C_2 [Nm/arcmin]	m [kg]
P831K (n_{1N} = 6000 rpm, $M_{2acc,max}$ = 1840 Nm)																		
17	637	732	13	1.3	P831_0100K202_0350 EZ303U	1380	1380	2210	345.5	9675/28	4000	3900	6500	0.52	3.5	1.5	132	47
17	748	910	15	1.1	P831_0100K202_0350 EZ401U	1380	1380	2760	345.5	9675/28	4000	3900	6500	1.1	3.5	1.5	132	49
19	457	511	6.4	2.2	P831_0070K202_0460 EZ302U	1400	1400	1860	323.6	12943/40	4000	3900	6500	0.37	3.5	1.5	128	47
19	597	685	8.4	1.7	P831_0070K202_0460 EZ303U	1400	1400	1860	323.6	12943/40	4000	3900	6500	0.48	3.5	1.5	128	47
19	700	852	9.9	1.4	P831_0070K202_0460 EZ401U	1490	1490	2890	323.6	12943/40	4000	3900	6500	1.0	3.5	1.5	128	49
21	399	447	7.9	2.0	P831_0070K202_0400 EZ302U	940	940	1430	282.8	9331/33	4000	3900	6500	0.35	3.5	1.5	128	47
21	521	599	10	1.5	P831_0070K202_0400 EZ303U	940	940	1430	282.8	9331/33	4000	3900	6500	0.46	3.5	1.5	128	47
21	605	736	15	1.4	P831_0100K202_0280 EZ401U	1380	1380	2760	279.5	559/2	4000	3900	6500	1.1	3.5	1.5	132	49
22	603	734	7.4	1.8	P831_0050K302_0560 EZ401U	1540	1540	2730	278.5	12255/44	3800	3500	6000	1.0	4.0	2.0	128	54
22	891	1153	11	1.2	P831_0050K302_0560 EZ501U	1540	1540	2730	278.5	12255/44	3800	3500	6000	3.0	4.0	2.0	128	55
25	341	382	6.0	2.9	P831_0070K202_0350 EZ302U	1140	1140	1550	241.9	1935/8	4000	3900	6500	0.42	3.5	1.5	128	47
25	446	512	7.8	2.2	P831_0070K202_0350 EZ303U	1160	1160	1550	241.9	1935/8	4000	3900	6500	0.53	3.5	1.5	128	47
25	523	637	9.2	1.9	P831_0070K202_0350 EZ401U	1490	1490	2890	241.9	1935/8	4000	3900	6500	1.1	3.5	1.5	128	49
25	774	1001	14	1.3	P831_0070K202_0350 EZ501U	1490	1490	2890	241.9	1935/8	4000	3900	6500	3.0	3.5	1.5	128	50
25	797	1115	14	1.3	P831_0070K202_0350 EZ402U	1490	1490	2890	241.9	1935/8	4000	3900	6500	1.8	3.5	1.5	128	50
25	332	372	5.9	3.0	P831_0070K202_0340 EZ302U	1020	1020	1350	235.3	12943/55	4000	3900	6500	0.38	3.5	1.5	128	47
25	434	498	7.8	2.3	P831_0070K202_0340 EZ303U	1020	1020	1350	235.3	12943/55	4000	3900	6500	0.49	3.5	1.5	128	47
25	509	620	9.1	2.0	P831_0070K202_0340 EZ401U	1250	1250	2220	235.3	12943/55	4000	3900	6500	1.0	3.5	1.5	128	49
26	327	366	9.1	2.6	P831_0100K202_0230 EZ302U	1090	1090	1740	231.8	14835/64	4000	3900	6500	0.53	3.5	1.5	132	47
26	427	491	12	2.0	P831_0100K202_0230 EZ303U	1310	1310	1740	231.8	14835/64	4000	3900	6500	0.64	3.5	1.5	132	47
26	502	611	14	1.7	P831_0100K202_0230 EZ401U	1380	1380	2760	231.8	14835/64	4000	3900	6500	1.2	3.5	1.5	132	49
26	742	960	21	1.1	P831_0100K202_0230 EZ501U	1380	1380	2760	231.8	14835/64	4000	3900	6500	3.1	3.5	1.5	132	50
26	500	609	7.1	2.2	P831_0050K302_0460 EZ401U	1840	1850	3230	231.1	1849/8	3800	3500	6000	1.1	4.0	2.0	128	54
26	739	957	10	1.5	P831_0050K302_0460 EZ501U	1840	1870	3230	231.1	1849/8	3800	3500	6000	3.1	4.0	2.0	128	55
26	761	1066	11	1.4	P831_0050K302_0460 EZ402U	1840	1870	3230	231.1	1849/8	3800	3500	6000	1.8	4.0	2.0	128	55
31	423	515	9.2	2.2	P831_0070K202_0280 EZ401U	1490	1490	2890	195.7	3913/20	4000	3900	6500	1.1	3.5	1.5	128	49
31	626	810	14	1.5	P831_0070K202_0280 EZ501U	1490	1490	2890	195.7	3913/20	4000	3900	6500	3.1	3.5	1.5	128	50
31	644	902	14	1.5	P831_0070K202_0280 EZ402U	1490	1490	2890	195.7	3913/20	4000	3900	6500	1.8	3.5	1.5	128	50
34	248	278	6.5	3.4	P831_0070K202_0250 EZ302U	830	830	1120	175.9	1935/11	4000	3900	6500	0.43	3.5	1.5	128	47
34	324	372	8.5	2.6	P831_0070K202_0250 EZ303U	850	850	1120	175.9	1935/11	4000	3900	6500	0.54	3.5	1.5	128	47
34	381	463	9.2	2.4	P831_0070K202_0250 EZ401U	1410	1410	2890	175.9	1935/11	4000	3900	6500	1.1	3.5	1.5	128	49
34	563	728	14	1.6	P831_0070K202_0250 EZ501U	1490	1490	2890	175.9	1935/11	4000	3900	6500	3.0	3.5	1.5	128	50
34	579	811	14	1.6	P831_0070K202_0250 EZ402U	1490	1490	2890	175.9	1935/11	4000	3900	6500	1.8	3.5	1.5	128	50
35	376	457	6.6	2.9	P831_0050K302_0350 EZ401U	1390	1390	3230	173.7	4515/26	3800	3500	6000	1.2	4.0	2.0	128	54
35	556	719	9.7	2.0	P831_0050K302_0350 EZ501U	1840	1870	3230	173.7	4515/26	3800	3500	6000	3.2	4.0	2.0	128	55
35	572	801	10	1.9	P831_0050K302_0350 EZ402U	1840	1870	3230	173.7	4515/26	3800	3500	6000	1.9	4.0	2.0	128	55
35	850	1274	15	1.3	P831_0050K302_0350 EZ502U	1840	1870	3230	173.7	4515/26	3800	3500	6000	5.5	4.0	2.0	128	56
35	850	1291	15	1.3	P831_0050K302_0350 EZ701U	1840	1870	3230	173.7	4515/26	3800	3500	6000	8.8	4.0	2.0	128	58
35	948	1372	17	1.2	P831_0050K302_0350 EZ404U	1840	1870	3230	173.7	4515/26	3800	3500	6000	3.2	4.0	2.0	128	57
37	229	256	6.1	3.9	P831_0070K202_0230 EZ302U	760	760	1220	162.3	20769/128	4000	3900	6500	0.53	3.5	1.5	128	47
37	299	344	7.9	3.0	P831_0070K202_0230 EZ303U	920	920	1220	162.3	20769/128	4000	3900	6500	0.64	3.5	1.5	128	47
37	351	427	9.3	2.5	P831_0070K202_0230 EZ401U	1300	1300	2890	162.3	20769/128	4000	3900	6500	1.2	3.5	1.5	128	49
37	519	672	14	1.7	P831_0070K202_0230 EZ501U	1490	1490	2890	162.3	20769/128	4000	3900	6500	3.1	3.5	1.5	128	50
37	534	748	14	1.7	P831_0070K202_0230 EZ402U	1490	1490	2890	162.3	20769/128	4000	3900	6500	1.9	3.5	1.5	128	50
42	308	375	9.4	2.8	P831_0070K202_0200 EZ401U	1140	1140	2890	142.3	7826/55	4000	3900	6500	1.1	3.5	1.5	128	49
42	455	589	14	1.9	P831_0070K202_0200 EZ501U	1490	1490	2890	142.3	7826/55	4000	3900	6500	3.1	3.5	1.5	128	50
42	469	656	14	1.8	P831_0070K202_0200 EZ402U	1490	1490	2890	142.3	7826/55	4000	3900	6500	1.8	3.5	1.5	128	50
42	696	1044	21	1.2	P831_0070K202_0200 EZ502U	1490	1490	2890	142.3	7826/55	4000	3900	6500	5.4	3.5	1.5	128	51
42	696	1058	21	1.2	P831_0070K202_0200 EZ701U	1490	1490	2890	142.3	7826/55	4000	3900	6500	8.7	3.5	1.5	128	53
42	777	1125	24	1.1	P831_0070K202_0200 EZ404U	1490	1490	2890	142.3	7826/55	4000	3900	6500	3.2	3.5	1.5	128	52
43	302	367	6.2	3.6	P831_0050K302_0280 EZ401U	1110	1110	3230	139.4	17845/128	3800	3500	6000	1.3	4.0	2.0	128	54
43	446	577	9.2	2.5	P831_0050K302_0280 EZ501U	1840	1870	3230	139.4	17845/128	3800	3500	6000	3.3	4.0	2.0	128	55
43	459	643	9.5	2.4	P831_0050K302_0280 EZ402U	1840	1870	3230	139.4	17845/128	3800	3500	6000	2.0	4.0	2.0	128	55
43	682	1023	14	1.6	P831_0050K302_0280 EZ502U	1840	1870	3230	139.4	17845/128	3800	3500	6000	5.6	4.0	2.0	128	56
43	682	1036	14	1.6	P831_0050K302_0280 EZ701U	1840	1870	3230	139.4	17845/128	3800	3500	6000	8.9	4.0	2.0	128	58
43	761	1102	16	1.4	P831_0050K302_0280 EZ404U	1840	1870	3230	139.4	17845/128	3800	3500	6000	3.4	4.0	2.0	128	57
43	813	1390	17	1.4	P831_0050K302_0280 EZ503U	1840	1870	3230	139.4	17845/128	3800	3500	6000	8.0	4.0	2.0	128	58
51	167	187	7.5	4.0	P831_0070K202_0170 EZ302U	560	560	890	118.0	20769/176	4000	3900	6500	0.57	3.5	1.5	128	47
51	218	250	9.8	3.1	P831_0070K202_0170 EZ303U	670	670	890	118.0	20769/176	4000	3900	6500	0.68	3.5	1.5	128	47
51	255	311	9.5	3.1	P831_0070K202_0170 EZ401U	940	940	2890	118.0	20769/176	4000	3900	6500	1.2	3.5	1.5	128	49
51	378	489	14	2.1	P831_0070K202_0170 EZ501U	1490	1490	2890	118.0	20769/176	4000	3900	6500	3.2	3.5	1.5	128	50
51	389	544	15	2.1	P831_0070K202_0170 EZ402U	1490	1490	2890	118.0	20769/176	4000	3900	6500	1.9	3.5	1.5	128	50
51	577	866	22	1.4	P831_0070K202_0170 EZ502U	1490	1490	2890	118.0	20769/176	4000	3900	6500	5.5	3.5	1.5	128	51
51	577	877	22	1.4	P831_0070K202_0170 EZ701U	1490	1490	2890	118.0	20769/176	4000	3900	6500	8.8	3.5	1.5	128	53

n_{2N} [rpm]	M_{2N} [Nm]	$M_{2,0}$ [Nm]	a_{th}	S	Type	M_{2acc} [Nm]	M_{2accHT} [Nm]	M_{2NOT} [Nm]	i	i_{exakt}	n_{1maxDB} EL1,2 [rpm]	n_{1maxDB} EL3,4,5,6 [rpm]	n_{1maxZB} [rpm]	J_1 [kgcm²]	$\Delta\varphi_2$ [arcmin]	$\Delta\varphi_{2red}$ [arcmin]	C_2 [Nm/arcmin]	m [kg]
P831K (n_{1N} = 6000 rpm, $M_{2acc,max}$ = 1840 Nm)																		
51	644	933	24	1.2	P831_0070K202_0170 EZ404U	1490	1490	2890	118.0	20769/176	4000	3900	6500	3.3	3.5	1.5	128	52
52	252	307	5.9	4.4	P831_0050K302_0230 EZ401U	930	930	3230	116.5	2795/24	3800	3500	6000	1.4	4.0	2.0	128	54
52	373	482	8.8	3.0	P831_0050K302_0230 EZ501U	1750	1750	3230	116.5	2795/24	3800	3500	6000	3.4	4.0	2.0	128	55
52	384	537	9.0	2.9	P831_0050K302_0230 EZ402U	1750	1750	3230	116.5	2795/24	3800	3500	6000	2.1	4.0	2.0	128	55
52	570	855	13	1.9	P831_0050K302_0230 EZ502U	1840	1870	3230	116.5	2795/24	3800	3500	6000	5.7	4.0	2.0	128	56
52	570	866	13	1.9	P831_0050K302_0230 EZ701U	1840	1870	3230	116.5	2795/24	3800	3500	6000	9.0	4.0	2.0	128	58
52	636	920	15	1.7	P831_0050K302_0230 EZ404U	1840	1870	3230	116.5	2795/24	3800	3500	6000	3.5	4.0	2.0	128	57
52	679	1162	16	1.6	P831_0050K302_0230 EZ503U	1840	1870	3230	116.5	2795/24	3800	3500	6000	8.1	4.0	2.0	128	58
P931K (n_{1N} = 2000 rpm, $M_{2acc,max}$ = 3110 Nm)																		
53	1561	2360	63	1.3	P931_0070K402_0054 EZ805U	3110	–	6210	37.95	12943/341	2600	2200	3800	139	3.5	–	305	121
65	1256	1900	64	1.5	P931_0070K402_0044 EZ805U	3110	–	6110	30.55	336/11	2600	2200	3800	142	3.5	–	305	121
71	1151	1741	65	1.6	P931_0070K402_0040 EZ805U	3110	–	5600	28.00	28/1	2600	2200	3800	143	3.5	–	305	121
P931K (n_{1N} = 3000 rpm, $M_{2acc,max}$ = 3110 Nm)																		
6.2	1964	2146	12	1.1	P931_0070K402_0690 EZ501U	3020	–	5350	485.4	38829/80	3600	3300	5500	3.0	3.5	–	305	80
7.7	1578	1724	11	1.3	P931_0070K402_0560 EZ501U	3110	–	6110	389.9	17157/44	3600	3300	5500	3.1	3.5	–	305	80
8.5	1428	1561	12	1.3	P931_0070K402_0500 EZ501U	2200	–	3890	353.0	38829/110	3600	3300	5500	3.1	3.5	–	305	80
9.3	1311	1433	11	1.6	P931_0070K402_0460 EZ501U	3110	–	6210	324.2	4214/13	3600	3300	5500	3.2	3.5	–	305	80
11	1147	1254	10	1.8	P931_0070K402_0410 EZ501U	2510	–	4450	283.6	34314/121	3600	3300	5500	3.1	3.5	–	305	80
12	984	1076	9.8	2.1	P931_0070K402_0350 EZ501U	3110	–	5820	243.3	29197/120	3600	3300	5500	3.4	3.5	–	305	80
12	1694	1831	17	1.2	P931_0070K402_0350 EZ502U	3110	–	5820	243.3	29197/120	3600	3300	5500	5.7	3.5	–	305	82
12	1694	1900	17	1.2	P931_0070K402_0350 EZ701U	3110	–	6210	243.3	29197/120	3600	3300	5500	9.0	3.5	–	305	84
13	954	1043	9.7	2.2	P931_0070K402_0340 EZ501U	3110	–	5160	235.7	33712/143	3600	3300	5500	3.2	3.5	–	305	80
13	1641	1775	17	1.3	P931_0070K402_0340 EZ502U	3110	–	5160	235.7	33712/143	3600	3300	5500	5.5	3.5	–	305	82
13	1641	1841	17	1.3	P931_0070K402_0340 EZ701U	3110	–	5160	235.7	33712/143	3600	3300	5500	8.8	3.5	–	305	84
15	787	860	9.3	2.7	P931_0070K402_0280 EZ501U	2930	–	5380	194.4	9331/48	3600	3300	5500	3.6	3.5	–	305	80
15	1354	1463	16	1.6	P931_0070K402_0280 EZ502U	3110	–	5380	194.4	9331/48	3600	3300	5500	5.9	3.5	–	305	82
15	1354	1518	16	1.6	P931_0070K402_0280 EZ701U	3110	–	6210	194.4	9331/48	3600	3300	5500	9.2	3.5	–	305	84
15	1774	2030	21	1.2	P931_0070K402_0280 EZ503U	3110	–	5380	194.4	9331/48	3600	3300	5500	8.2	3.5	–	305	83
17	716	783	9.1	2.9	P931_0070K402_0250 EZ501U	2660	–	4240	177.0	29197/165	3600	3300	5500	3.4	3.5	–	305	80
17	1232	1332	16	1.7	P931_0070K402_0250 EZ502U	3110	–	4240	177.0	29197/165	3600	3300	5500	5.7	3.5	–	305	82
17	1232	1382	16	1.7	P931_0070K402_0250 EZ701U	3110	–	6210	177.0	29197/165	3600	3300	5500	9.0	3.5	–	305	84
17	1615	1848	20	1.3	P931_0070K402_0250 EZ503U	3110	–	4240	177.0	29197/165	3600	3300	5500	8.1	3.5	–	305	83
17	1998	2398	25	1.1	P931_0070K402_0250 EZ702U	3110	–	6210	177.0	29197/165	3600	3300	5500	14	3.5	–	305	86
18	660	721	8.9	3.2	P931_0070K402_0230 EZ501U	2450	–	4890	163.0	3913/24	3600	3300	5500	3.8	3.5	–	305	80
18	1135	1227	15	1.9	P931_0070K402_0230 EZ502U	3110	–	4890	163.0	3913/24	3600	3300	5500	6.1	3.5	–	305	82
18	1135	1273	15	1.9	P931_0070K402_0230 EZ701U	3070	–	6210	163.0	3913/24	3600	3300	5500	9.4	3.5	–	305	84
18	1488	1703	20	1.4	P931_0070K402_0230 EZ503U	3110	–	4890	163.0	3913/24	3600	3300	5500	8.5	3.5	–	305	83
18	1841	2209	25	1.1	P931_0070K402_0230 EZ702U	3110	–	6210	163.0	3913/24	3600	3300	5500	15	3.5	–	305	86
21	572	625	8.6	3.7	P931_0070K402_0200 EZ501U	2130	–	3910	141.4	9331/66	3600	3300	5500	3.7	3.5	–	305	80
21	984	1064	15	2.1	P931_0070K402_0200 EZ502U	2950	–	3910	141.4	9331/66	3600	3300	5500	6.0	3.5	–	305	82
21	984	1104	15	2.1	P931_0070K402_0200 EZ701U	2660	–	6210	141.4	9331/66	3600	3300	5500	9.3	3.5	–	305	84
21	1290	1477	19	1.6	P931_0070K402_0200 EZ503U	2950	–	3910	141.4	9331/66	3600	3300	5500	8.3	3.5	–	305	83
21	1596	1916	24	1.3	P931_0070K402_0200 EZ702U	3110	–	6210	141.4	9331/66	3600	3300	5500	14	3.5	–	305	86
21	1796	2128	27	1.2	P931_0070K402_0200 EZ505U	3110	–	6210	141.4	9331/66	3600	3300	5500	13	3.5	–	305	86
25	848	951	14	2.5	P931_0070K402_0175 EZ701U	2290	–	6210	121.8	731/6	3400	3000	5000	9.9	3.5	–	305	84
25	1376	1651	23	1.5	P931_0070K402_0175 EZ702U	3110	–	6210	121.8	731/6	3400	3000	5000	15	3.5	–	305	86
25	1548	1834	26	1.4	P931_0070K402_0175 EZ505U	3110	–	6210	121.8	731/6	3400	3000	5000	14	3.5	–	305	86
25	1891	2384	32	1.1	P931_0070K402_0175 EZ703U	3110	–	6210	121.8	731/6	3400	3000	5000	23	3.5	–	305	88
25	480	524	8.2	4.4	P931_0070K402_0170 EZ501U	1790	–	3560	118.6	3913/33	3600	3300	5500	3.9	3.5	–	305	80
25	826	893	14	2.5	P931_0070K402_0170 EZ502U	2680	–	3560	118.6	3913/33	3600	3300	5500	6.2	3.5	–	305	82
25	826	926	14	2.5	P931_0070K402_0170 EZ701U	2230	–	6210	118.6	3913/33	3600	3300	5500	9.5	3.5	–	305	84
25	1082	1238	19	1.9	P931_0070K402_0170 EZ503U	2680	–	3560	118.6	3913/33	3600	3300	5500	8.6	3.5	–	305	83
25	1339	1607	23	1.6	P931_0070K402_0170 EZ702U	3110	–	6210	118.6	3913/33	3600	3300	5500	15	3.5	–	305	86
25	1506	1785	26	1.4	P931_0070K402_0170 EZ505U	3110	–	6210	118.6	3913/33	3600	3300	5500	13	3.5	–	305	86
25	1841	2321	31	1.1	P931_0070K402_0170 EZ703U	3110	–	6210	118.6	3913/33	3600	3300	5500	23	3.5	–	305	88
31	677	759	13	3.1	P931_0070K402_0140 EZ701U	1830	–	6210	97.20	9331/96	3400	3000	5000	11	3.5	–	305	84
31	1097	1317	22	1.9	P931_0070K402_0140 EZ702U	3110	–	6210	97.20	9331/96	3400	3000	5000	16	3.5	–	305	86
31	1235	1463	25	1.7	P931_0070K402_0140 EZ505U	3110	–	6210	97.20	9331/96	3400	3000	5000	14	3.5	–	305	86
31	1509	1902	30	1.4	P931_0070K402_0140 EZ703U	3110	–	6210	97.20	9331/96	3400	3000	5000	24	3.5	–	305	88
34	617	692	13	3.4	P931_0070K402_0125 EZ701U	1670	–	6210	88.61	2924/33	3400	3000	5000	10	3.5	–	305	84
34	1000	1201	21	2.1	P931_0070K402_0125 EZ702U	3110	–	6210	88.61	2924/33	3400	3000	5000	15	3.5	–	305	86
34	1125	1334	24	1.9	P931_0070K402_0125 EZ505U	3110	–	6210	88.61	2924/33	3400	3000	5000	14	3.5	–	305	86
34	1376	1734	29	1.5	P931_0070K402_0125 EZ703U	3110	–	6210	88.61	2924/33	3400	3000	5000	23	3.5	–	305	88
37	561	630	13	3.7	P931_0070K402_0115 EZ701U	1520	–	6050	80.63	645/8	3000	2600	4500	11	3.5	–	305	84

n_{2N} [rpm]	M_{2N} [Nm]	$M_{2,0}$ [Nm]	a_{th}	S	Type	M_{2acc} [Nm]	M_{2accHT} [Nm]	M_{2NOT} [Nm]	i	i_{exakt}	n_{1maxDB} EL1,2 [rpm]	n_{1maxDB} EL3,4,5,6 [rpm]	n_{1maxZB} [rpm]	J_1 [kgcm²]	$\Delta\varphi_2$ [arcmin]	$\Delta\varphi_{2red}$ [arcmin]	C_2 [Nm/arcmin]	m [kg]
P931K (n_{1N} = 3000 rpm, $M_{2acc,max}$ = 3110 Nm)																		
37	910	1092	21	2.3	P931_0070K402_0115 EZ702U	3110	–	6050	80.63	645/8	3000	2600	4500	16	3.5	–	305	86
37	1024	1214	23	2.1	P931_0070K402_0115 EZ505U	3110	–	6050	80.63	645/8	3000	2600	4500	15	3.5	–	305	86
37	1252	1578	29	1.7	P931_0070K402_0115 EZ703U	3110	–	6050	80.63	645/8	3000	2600	4500	24	3.5	–	305	88
37	1616	2291	37	1.3	P931_0070K402_0115 EZ705U	3110	–	6210	80.63	645/8	3000	2600	4500	37	3.5	–	305	94
42	492	552	12	4.3	P931_0070K402_0100 EZ701U	1330	–	5300	70.69	9331/132	3400	3000	5000	11	3.5	–	305	84
42	798	958	20	2.6	P931_0070K402_0100 EZ702U	2730	–	5300	70.69	9331/132	3400	3000	5000	16	3.5	–	305	86
42	898	1064	23	2.3	P931_0070K402_0100 EZ505U	3110	–	5300	70.69	9331/132	3400	3000	5000	15	3.5	–	305	86
42	1097	1383	28	1.9	P931_0070K402_0100 EZ703U	3110	–	5300	70.69	9331/132	3400	3000	5000	24	3.5	–	305	88
42	1417	2009	36	1.5	P931_0070K402_0100 EZ705U	3110	–	6210	70.69	9331/132	3400	3000	5000	36	3.5	–	305	94
46	450	505	12	4.7	P931_0070K402_0092 EZ701U	1220	–	4850	64.67	16555/256	3000	2600	4500	12	3.5	–	305	84
46	730	876	20	2.9	P931_0070K402_0092 EZ702U	2490	–	4850	64.67	16555/256	3000	2600	4500	17	3.5	–	305	86
46	821	974	22	2.6	P931_0070K402_0092 EZ505U	3110	–	4850	64.67	16555/256	3000	2600	4500	16	3.5	–	305	86
46	1004	1266	27	2.1	P931_0070K402_0092 EZ703U	3110	–	4850	64.67	16555/256	3000	2600	4500	25	3.5	–	305	88
46	1296	1837	35	1.6	P931_0070K402_0092 EZ705U	3110	–	6210	64.67	16555/256	3000	2600	4500	38	3.5	–	305	94
46	1357	2257	37	1.5	P931_0070K402_0092 EZ802U	3110	–	6210	64.67	16555/256	3000	2600	4500	62	3.5	–	305	102
51	662	794	19	3.2	P931_0070K402_0084 EZ702U	2260	–	4400	58.64	645/11	3000	2600	4500	17	3.5	–	305	86
51	745	883	22	2.8	P931_0070K402_0084 EZ505U	3110	–	4400	58.64	645/11	3000	2600	4500	15	3.5	–	305	86
51	910	1148	26	2.3	P931_0070K402_0084 EZ703U	3110	–	4400	58.64	645/11	3000	2600	4500	25	3.5	–	305	88
51	1175	1666	34	1.8	P931_0070K402_0084 EZ705U	3110	–	6210	58.64	645/11	3000	2600	4500	37	3.5	–	305	94
51	1230	2047	36	1.7	P931_0070K402_0084 EZ802U	3110	–	6210	58.64	645/11	3000	2600	4500	61	3.5	–	305	102
57	1046	1483	34	1.9	P931_0070K402_0075 EZ705U	3110	–	6210	52.19	12943/248	2600	2200	3800	39	3.5	–	305	94
57	1095	1822	36	1.9	P931_0070K402_0075 EZ802U	3110	–	6210	52.19	12943/248	2600	2200	3800	63	3.5	–	305	102
57	1306	2367	43	1.6	P931_0070K402_0075 EZ803U	3110	–	6210	52.19	12943/248	2600	2200	3800	89	3.5	–	305	108
64	531	637	19	3.7	P931_0070K402_0067 EZ702U	1810	–	3530	47.03	1505/32	3000	2600	4500	18	3.5	–	305	86
64	597	708	22	3.3	P931_0070K402_0067 EZ505U	2660	–	3530	47.03	1505/32	3000	2600	4500	17	3.5	–	305	86
64	730	920	27	2.7	P931_0070K402_0067 EZ703U	2660	–	3530	47.03	1505/32	3000	2600	4500	26	3.5	–	305	88
64	943	1336	35	2.1	P931_0070K402_0067 EZ705U	3110	–	6210	47.03	1505/32	3000	2600	4500	39	3.5	–	305	94
64	987	1642	36	2.0	P931_0070K402_0067 EZ802U	3110	–	6210	47.03	1505/32	3000	2600	4500	63	3.5	–	305	102
64	1177	2133	43	1.7	P931_0070K402_0067 EZ803U	3110	–	6210	47.03	1505/32	3000	2600	4500	88	3.5	–	305	108
71	842	1193	35	2.2	P931_0070K402_0060 EZ705U	3110	–	6210	42.00	42/1	2600	2200	3800	41	3.5	–	305	94
71	881	1466	37	2.1	P931_0070K402_0060 EZ802U	3110	–	6210	42.00	42/1	2600	2200	3800	65	3.5	–	305	102
71	1051	1905	44	1.8	P931_0070K402_0060 EZ803U	3110	–	6210	42.00	42/1	2600	2200	3800	91	3.5	–	305	108
79	761	1078	35	2.4	P931_0070K402_0054 EZ705U	3110	–	6210	37.95	12943/341	2600	2200	3800	41	3.5	–	305	94
79	796	1325	37	2.3	P931_0070K402_0054 EZ802U	3110	–	6210	37.95	12943/341	2600	2200	3800	65	3.5	–	305	102
79	950	1721	44	1.9	P931_0070K402_0054 EZ803U	3110	–	6210	37.95	12943/341	2600	2200	3800	90	3.5	–	305	108
98	612	868	36	2.8	P931_0070K402_0044 EZ705U	2990	–	6110	30.55	336/11	2600	2200	3800	43	3.5	–	305	94
98	641	1066	38	2.6	P931_0070K402_0044 EZ802U	2870	–	6110	30.55	336/11	2600	2200	3800	67	3.5	–	305	102
98	765	1385	45	2.2	P931_0070K402_0044 EZ803U	3110	–	6110	30.55	336/11	2600	2200	3800	93	3.5	–	305	108
107	561	796	36	2.9	P931_0070K402_0040 EZ705U	2740	–	5600	28.00	28/1	2600	2200	3800	45	3.5	–	305	94
107	587	977	38	2.8	P931_0070K402_0040 EZ802U	2630	–	5600	28.00	28/1	2600	2200	3800	69	3.5	–	305	102
107	701	1270	45	2.4	P931_0070K402_0040 EZ803U	3110	–	5600	28.00	28/1	2600	2200	3800	94	3.5	–	305	108
P931K (n_{1N} = 4500 rpm, $M_{2acc,max}$ = 3110 Nm)																		
28	1457	2347	20	1.4	P931_0070K402_0230 EZ505U	3110	–	6210	163.0	3913/24	3600	3300	5500	13	3.5	–	305	86
32	1264	2035	19	1.7	P931_0070K402_0200 EZ505U	3110	–	6210	141.4	9331/66	3600	3300	5500	13	3.5	–	305	86
37	1089	1754	18	1.9	P931_0070K402_0175 EZ505U	3110	–	6210	121.8	731/6	3400	3000	5000	14	3.5	–	305	86
37	1387	2293	23	1.5	P931_0070K402_0175 EZ703U	3110	–	6210	121.8	731/6	3400	3000	5000	23	3.5	–	305	88
38	1060	1707	18	2.0	P931_0070K402_0170 EZ505U	3110	–	6210	118.6	3913/33	3600	3300	5500	13	3.5	–	305	86
38	1350	2231	23	1.6	P931_0070K402_0170 EZ703U	3110	–	6210	118.6	3913/33	3600	3300	5500	23	3.5	–	305	88
46	869	1399	17	2.4	P931_0070K402_0140 EZ505U	3110	–	6210	97.20	9331/96	3400	3000	5000	14	3.5	–	305	86
46	1107	1829	22	1.9	P931_0070K402_0140 EZ703U	3110	–	6210	97.20	9331/96	3400	3000	5000	24	3.5	–	305	88
51	792	1276	17	2.7	P931_0070K402_0125 EZ505U	3110	–	6210	88.61	2924/33	3400	3000	5000	14	3.5	–	305	86
51	1009	1667	21	2.1	P931_0070K402_0125 EZ703U	3110	–	6210	88.61	2924/33	3400	3000	5000	23	3.5	–	305	88
56	721	1161	17	2.8	P931_0070K402_0115 EZ505U	3110	–	6050	80.63	645/8	3000	2600	4500	15	3.5	–	305	86
56	918	1517	22	2.2	P931_0070K402_0115 EZ703U	3110	–	6050	80.63	645/8	3000	2600	4500	24	3.5	–	305	88
56	1244	2276	29	1.6	P931_0070K402_0115 EZ705U	3110	–	6210	80.63	645/8	3000	2600	4500	37	3.5	–	305	94
64	632	1018	17	3.1	P931_0070K402_0100 EZ505U	3110	–	5300	70.69	9331/132	3400	3000	5000	15	3.5	–	305	86
64	698	2295	19	2.8	P931_0070K402_0100 EZ802U	3110	–	6210	70.69	9331/132	3400	3000	5000	60	3.5	–	305	102
64	805	1330	22	2.4	P931_0070K402_0100 EZ703U	3110	–	5300	70.69	9331/132	3400	3000	5000	24	3.5	–	305	88
64	1091	1995	29	1.8	P931_0070K402_0100 EZ705U	3110	–	6210	70.69	9331/132	3400	3000	5000	36	3.5	–	305	94
70	578	931	17	3.3	P931_0070K402_0092 EZ505U	3110	–	4850	64.67	16555/256	3000	2600	4500	16	3.5	–	305	86
70	639	2099	19	3.0	P931_0070K402_0092 EZ802U	3110	–	6210	64.67	16555/256	3000	2600	4500	62	3.5	–	305	102
70	736	1217	22	2.6	P931_0070K402_0092 EZ703U	3110	–	4850	64.67	16555/256	3000	2600	4500	25	3.5	–	305	88
70	998	1825	30	1.9	P931_0070K402_0092 EZ705U	3110	–	6210	64.67	16555/256	3000	2600	4500	38	3.5	–	305	94
77	524	844	17	3.5	P931_0070K402_0084 EZ505U	3110	–	4400	58.64	645/11	3000	2600	4500	15	3.5	–	305	86

n_{2N} [rpm]	M_{2N} [Nm]	$M_{2,0}$ [Nm]	a_{th}	S	Type	M_{2acc} [Nm]	M_{2accHT} [Nm]	M_{2NOT} [Nm]	i	i_{exakt}	n_{1maxDB} EL1,2 [rpm]	n_{1maxDB} EL3,4,5,6 [rpm]	n_{1maxZB} [rpm]	J_1 [kgcm²]	$\Delta\varphi_2$ [arcmin]	$\Delta\varphi_{2red}$ [arcmin]	C_2 [Nm/arcmin]	m [kg]
P931K (n_{1N} = 4500 rpm, $M_{2acc,max}$ = 3110 Nm)																		
77	579	1903	19	3.2	P931_0070K402_0084 EZ802U	3110	–	6210	58.64	645/11	3000	2600	4500	61	3.5	–	305	102
77	668	1103	22	2.8	P931_0070K402_0084 EZ703U	3110	–	4400	58.64	645/11	3000	2600	4500	25	3.5	–	305	88
77	905	1655	30	2.0	P931_0070K402_0084 EZ705U	3110	–	6210	58.64	645/11	3000	2600	4500	37	3.5	–	305	94
96	420	677	18	4.1	P931_0070K402_0067 EZ505U	2660	–	3530	47.03	1505/32	3000	2600	4500	17	3.5	–	305	86
96	465	1527	20	3.7	P931_0070K402_0067 EZ802U	3110	–	6210	47.03	1505/32	3000	2600	4500	63	3.5	–	305	102
96	535	885	23	3.2	P931_0070K402_0067 EZ703U	2660	–	3530	47.03	1505/32	3000	2600	4500	26	3.5	–	305	88
96	726	1328	30	2.4	P931_0070K402_0067 EZ705U	3110	–	6210	47.03	1505/32	3000	2600	4500	39	3.5	–	305	94

11.3 Dimensional drawings

In this chapter you can find the dimensions of the geared motors.

There is a dimensional drawing for every possible shaft/housing design, each with the tables for gear unit dimensions, motor dimensions and geared motor dimensions.

Dimensions can exceed the specifications of ISO 2768-mK due to casting tolerances or accumulation of individual tolerances.

We reserve the right to make dimensional changes due to ongoing technical development.

You can download 3D models of our standard drives at http://configurator.stoeber.de.

Combination options and the dimensions of forced ventilated geared motors can also be found at http://configurator.stoeber.de.

Tolerances

Solid shaft	Tolerance
Fit	ISO k6
Feather keys	DIN 6885-1, high form A
Balancing	With half feather key

Centering holes in solid shafts in accordance with DIN 332-2, DR shape

Thread size	M4	M5	M6	M8	M10	M12	M16	M20	M24
Thread depth [mm]	10	12.5	16	19	22	28	36	42	50

11.3.1 G shaft design (solid shaft without feather key)

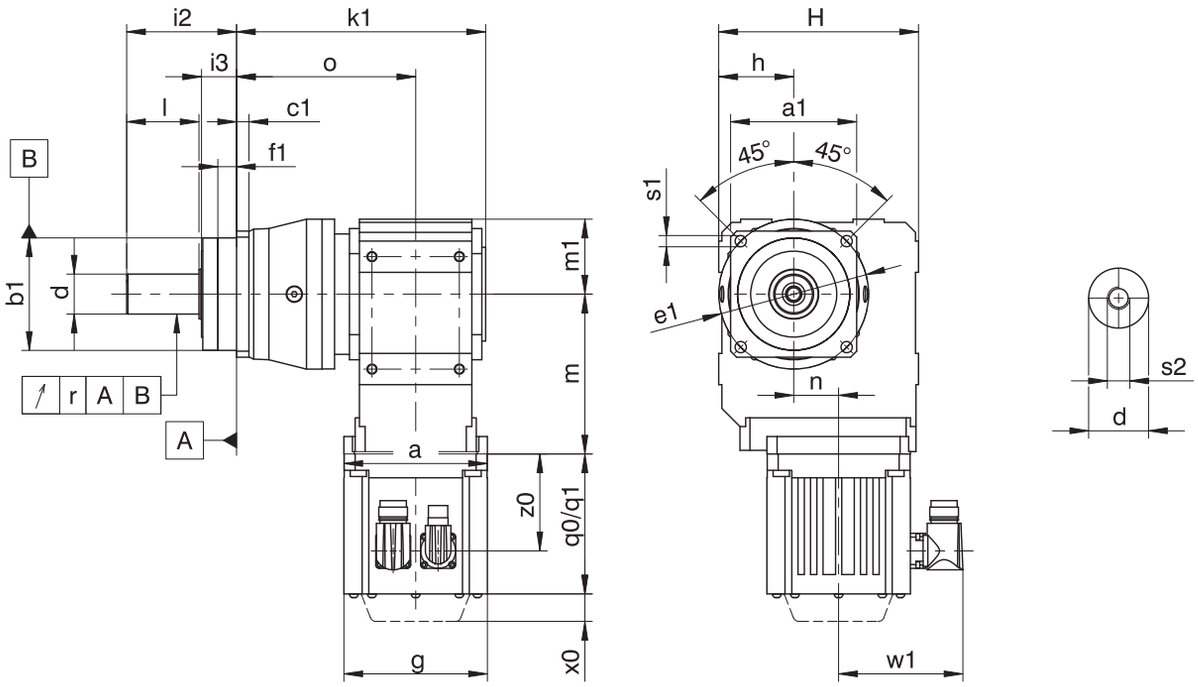

q0	Applies to motors without brake.	q1	Applies to motors with brake.
x0	Applies to encoders using an optical measuring method.	w1	Different for the One Cable Solution (OCS), see the chapter [▸ 17.4]
–	The radial runout specification applies only to the reinforced bearing D.		

Dimensions of gear units

Type	□a1	Øb1	c1	Ød	Øe1	f1	h	H	i2	i3	k1	l	m1	o	r	Øs1	s2
P531_K102_	101	90_{h6}	10	32_{k6}	120	15.0	60	160	88	28	199.5	58	60.0	143.5	0.030	9.0	M12
P731_K102_	144	130_{h6}	15	40_{k6}	165	3.5	60	160	112	27	212.5	82	72.0	156.5	0.035	11.0	M16
P731_K202_	144	130_{h6}	15	40_{k6}	165	3.5	65	190	112	27	240.5	82	72.0	170.5	0.035	11.0	M16
P831_K202_	190	160_{h6}	15	55_{k6}	215	10.0	65	190	112	27	277.5	82	95.0	207.5	0.035	13.5	M20
P831_K302_	190	160_{h6}	15	55_{k6}	215	10.0	75	213	112	27	291.0	82	95.0	215.0	0.035	13.5	M20
P931_K402_	212	180_{h6}	17	75_{k6}	250	10.0	90	240	143	34	350.5	105	112.5	260.5	0.040	17.5	M20

Dimensions of motors

Type	□g	q0	q1	w1	x0	z0
EZ301U	72	114.0	154.0	55.5	21	78.5
EZ302U	72	136.0	176.0	55.5	21	100.5
EZ303U	72	158.0	198.0	55.5	21	122.5
EZ401U	98	118.5	167.0	91.0	22	76.5
EZ402U	98	143.5	192.0	91.0	22	101.5
EZ404U	98	193.5	242.0	91.0	22	151.5
EZ501U	115	112.0	166.5	100.0	22	77.5
EZ502U	115	137.0	191.5	100.0	22	102.5
EZ503U	115	162.0	216.5	100.0	22	127.5
EZ505U	115	212.0	266.5	100.0	22	177.5
EZ701U	145	125.0	184.0	115.0	22	87.0
EZ702U	145	150.0	209.0	115.0	22	112.0
EZ703U	145	175.0	234.0	115.0	22	137.0
EZ705U	145	230.0	289.0	134.0	22	188.0
EZ802U	190	232.5	309.5	156.5	22	178.5
EZ803U	190	273.5	350.5	156.5	22	219.5
EZ805U	190	355.5	432.5	156.5	22	301.5

Dimensions of geared motors

Type	EZ3			EZ4			EZ5			EZ7			EZ8		
	a	m	n	a	m	n	a	m	n	a	m	n	a	m	n
P531_K102_	□72	124	36.0	□98	124	36.0	□115	128	36.0	□145	130	36.0	–	–	–
P731_K102_	□72	124	36.0	□98	124	36.0	□115	128	36.0	□145	130	36.0	–	–	–
P731_K202_	□72	143	46.0	□98	143	46.0	□115	147	46.0	□145	149	46.0	–	–	–
P831_K202_	□72	143	46.0	□98	143	46.0	□115	147	46.0	□145	149	46.0	–	–	–
P831_K302_	–	–	–	∅140	163	52.5	□115	167	52.5	□145	169	52.5	–	–	–
P931_K402_	–	–	–	–	–	–	∅160	187	60.0	□145	189	60.0	□190	192	60.0

11.3.2 P shaft design (solid shaft with feather key)

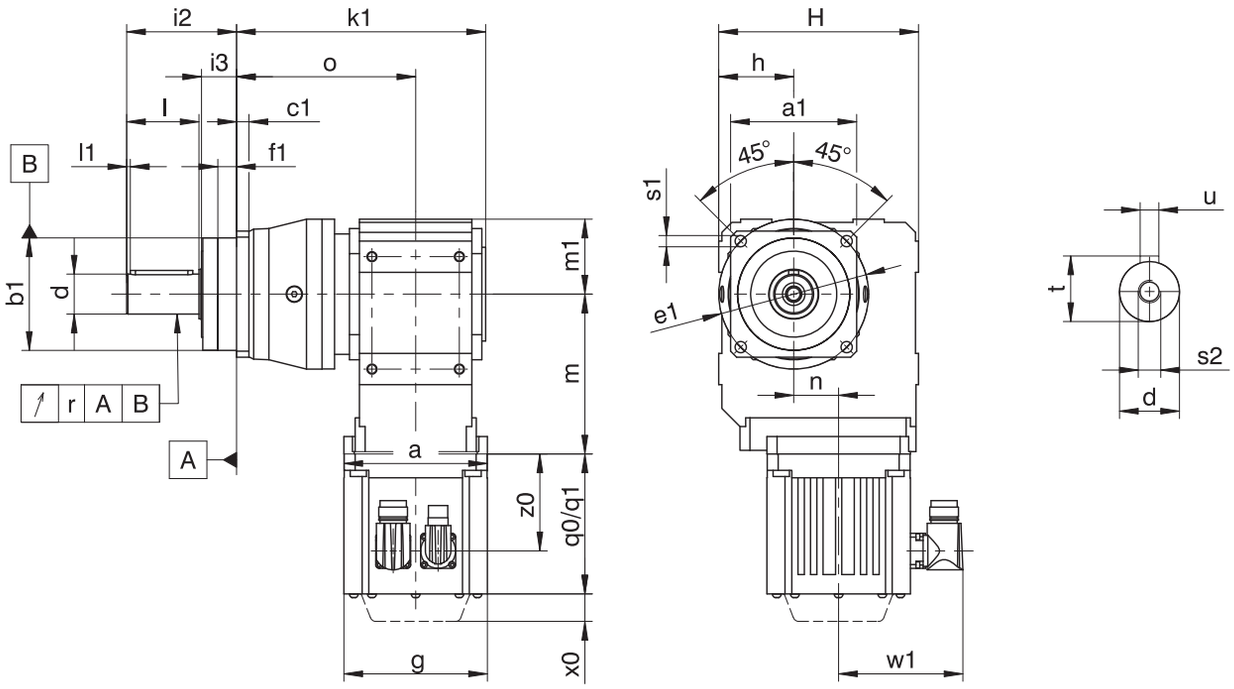

q0	Applies to motors without brake.	q1	Applies to motors with brake.
x0	Applies to encoders using an optical measuring method.	w1	Different for the One Cable Solution (OCS), see the chapter [▸ 17.4]
–	The radial runout specification applies only to the reinforced bearing D.		

Dimensions of gear units

Type	□a1	Øb1	c1	Ød	Øe1	f1	h	H	i2	i3	k1	l	l1	m1	o	r	Øs1	s2	t	u
P531_K102_	101	90_{h6}	10	32_{k6}	120	15.0	60	160	88	28	199.5	58	3	60.0	143.5	0.030	9.0	M12	35.0	A10×8×50
P731_K102_	144	130_{h6}	15	40_{k6}	165	3.5	60	160	112	27	212.5	82	4	72.0	156.5	0.035	11.0	M16	43.0	A12×8×70
P731_K202_	144	130_{h6}	15	40_{k6}	165	3.5	65	190	112	27	240.5	82	4	72.0	170.5	0.035	11.0	M16	43.0	A12×8×70
P831_K202_	190	160_{h6}	15	55_{k6}	215	10.0	65	190	112	27	277.5	82	6	95.0	207.5	0.035	13.5	M20	59.0	A16×10×70
P831_K302_	190	160_{h6}	15	55_{k6}	215	10.0	75	213	112	27	291.0	82	6	95.0	215.0	0.035	13.5	M20	59.0	A16×10×70
P931_K402_	212	180_{h6}	17	75_{k6}	250	10.0	90	240	143	34	350.5	105	7	112.5	260.5	0.040	17.5	M20	79.5	A20×12×90

Dimensions of motors

Type	□g	q0	q1	w1	x0	z0
EZ301U	72	114.0	154.0	55.5	21	78.5
EZ302U	72	136.0	176.0	55.5	21	100.5
EZ303U	72	158.0	198.0	55.5	21	122.5
EZ401U	98	118.5	167.0	91.0	22	76.5
EZ402U	98	143.5	192.0	91.0	22	101.5
EZ404U	98	193.5	242.0	91.0	22	151.5
EZ501U	115	112.0	166.5	100.0	22	77.5
EZ502U	115	137.0	191.5	100.0	22	102.5
EZ503U	115	162.0	216.5	100.0	22	127.5
EZ505U	115	212.0	266.5	100.0	22	177.5
EZ701U	145	125.0	184.0	115.0	22	87.0
EZ702U	145	150.0	209.0	115.0	22	112.0
EZ703U	145	175.0	234.0	115.0	22	137.0
EZ705U	145	230.0	289.0	134.0	22	188.0
EZ802U	190	232.5	309.5	156.5	22	178.5
EZ803U	190	273.5	350.5	156.5	22	219.5
EZ805U	190	355.5	432.5	156.5	22	301.5

Dimensions of geared motors

Type	EZ3			EZ4			EZ5			EZ7			EZ8		
	a	m	n	a	m	n	a	m	n	a	m	n	a	m	n
P531_K102_	□72	124	36.0	□98	124	36.0	□115	128	36.0	□145	130	36.0	–	–	–
P731_K102_	□72	124	36.0	□98	124	36.0	□115	128	36.0	□145	130	36.0	–	–	–
P731_K202_	□72	143	46.0	□98	143	46.0	□115	147	46.0	□145	149	46.0	–	–	–
P831_K202_	□72	143	46.0	□98	143	46.0	□115	147	46.0	□145	149	46.0	–	–	–
P831_K302_	–	–	–	∅140	163	52.5	□115	167	52.5	□145	169	52.5	–	–	–
P931_K402_	–	–	–	–	–	–	∅160	187	60.0	□145	189	60.0	□190	192	60.0

11.4 Type designation

In this chapter, you can find an explanation of the type designation with the associated options.

Additional ordering information not included in the type designation can be found at the end of the chapter.

Example code

P	**5**	**3**	**1**	**S**	**G**	**S**	**S**	**0050**	**K102VF**	**0060**	**EZ401U**

Explanation

Code	Designation	Design
P	Type	Planetary gear unit
5	Size	5 (example)
3	Generation	Generation 3
1	Stages	Single-stage
S	Housing	Standard
G P	Shaft	Solid shaft without feather key Solid shaft with feather key
S D Z	Bearing	Standard bearing Axially reinforced bearing (P3 – P9) Radially reinforced bearing (P3 – P9)[1]
S R	Backlash	Standard Reduced
0050	Transmission ratio of output (i x 10)	i = 5 (example)
K102VF	Input	K1 right-angle geared motor (example)
0060	Transmission ratio of input (i x 10)	i = 6 (example)
EZ401U	Motor	EZ synchronous servo motor

To complete the type designation, also specify the following in your order:

- For a detailed type designation of the motor, see the chapter [▸ 17]
- For the mounting position, see the chapter [▸ 11.5.3]
- Output gear unit side 3 or 4, see the chapter [▸ 11.5.3]
- Radial shaft seal rings at the output made of NBR or FKM (option), see the chapter [▸ 11.6.3]
- Position of the plug connectors, see the chapter [▸ 11.5.5]
- Reverse operation of the output shaft from ±20° to ±90° and horizontal installation, note the chapter Reverse operation

[1] Not for reduced-backlash option.

11.4.1 Nameplate

An example gear unit nameplate is explained in the figure below.

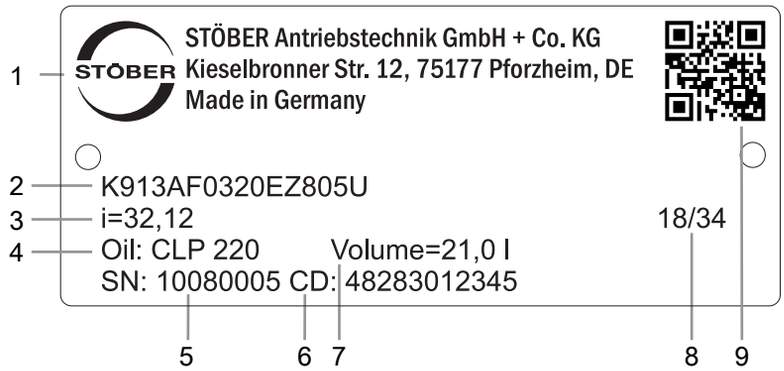

Code	Designation
1	Name of manufacturer
2	Type designation
3	Gear ratio of the gear unit
4	Lubricant specification
5	Serial number of the gear unit
6	Customer-specific data
7	Lubricant fill volume
8	Date of manufacture (year/calendar week)
9	QR code (link to product information)

11.4.1.1 Supporting documents

You can view or download supporting documents for the product by reading off the serial number on the nameplate of the product and entering it at the following address online:
https://id.stober.com

Alternatively, you can use a suitable mobile device to scan in the QR code on the nameplate of the product in order to be linked to the supporting documents.

11.5 Product description

11.5.1 Input options

EZ synchronous servo motor

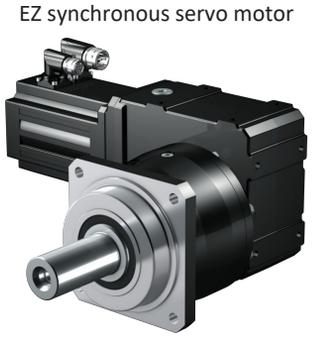

http://www.stoeber.de/en/PKEZ

11.5.2 Installation conditions

The specified torques and forces only apply when gear units are fastened on the machine side using screws of strength class 12.9. In addition, the gear housings must be adjusted at the pilot. The machine-side fit must be H7.

11.5.3 Mounting positions

The following table shows the standard mounting positions.

The numbers identify the gear unit sides. The mounting position is defined by the gear side facing downwards.

EL1	EL2	EL3
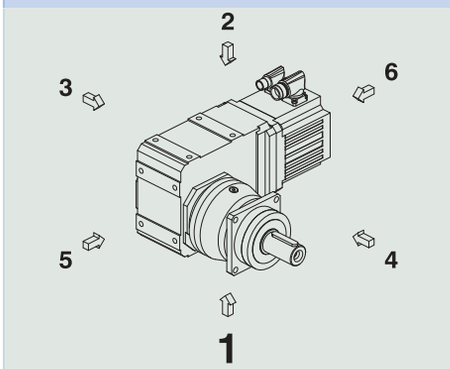	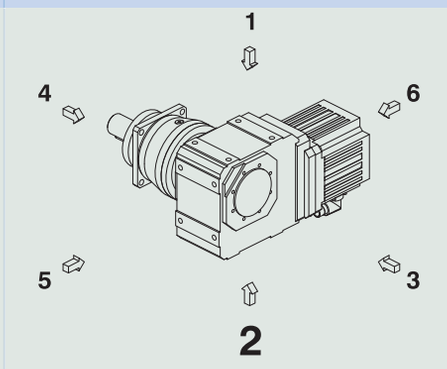	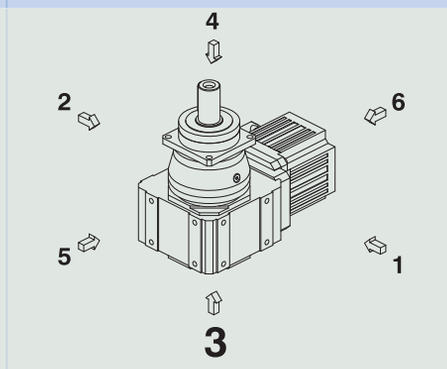
EL4	**EL5**	**EL6**
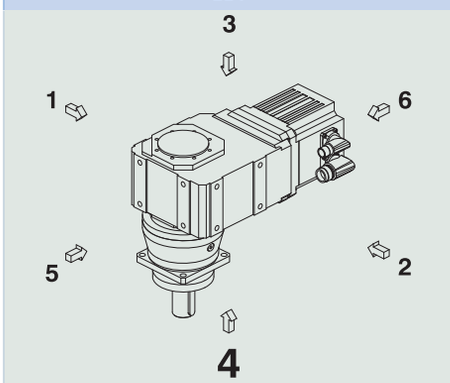	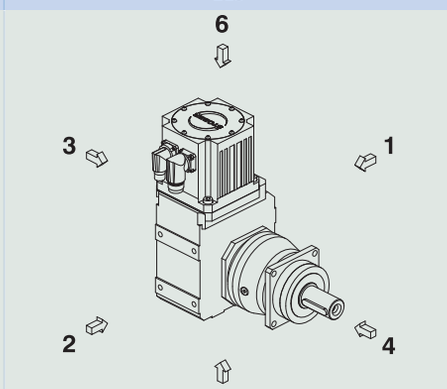	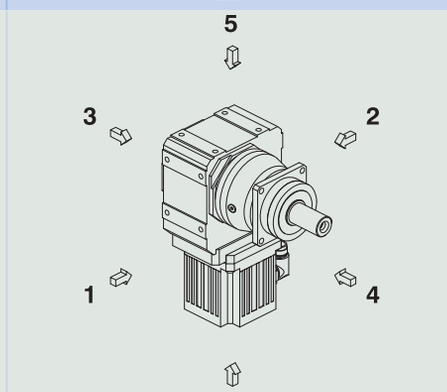

Since the lubricant filling volume of the gear unit depends on the mounting position, the mounting position must be specified when ordering.

11.5.4 Lubricants

STOBER fills the gear units with the amount and type of lubricant specified on the nameplate. The filling volume and the structure of the gear units depend on the mounting position.

Only install the gear units in the intended mounting position! Reposition the gear units only after consulting STOBER. Otherwise, STOBER assumes no liability for the gear units.

You will receive lubricants for use in the food industry upon request.

11.5.5 Position of the plug connectors

Mounting position EL1 Plug connector in 270° position (standard)	Mounting position EL4 Plug connector in 270° position (standard)
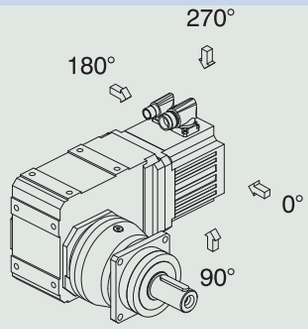	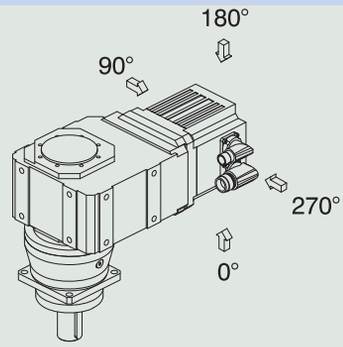

Indicate variations for your geared motor in the order.

Note that the plug connector position rotates along with the geared motor if the geared motor is in another mounting position.

11.5.6 Other product features

Feature	Value
Max. permitted gear unit temperature (on the surface of the gear unit)	≤ 90 °C
Paint	Black RAL 9005
Explosion-proof design in accordance with (ATEX) Directive 2014/34/EU (optional)	Not available
Efficiency: η_{get} three-stage	 94%
Protection class:[2] Gear unit Motor	 IP65 IP56, optionally IP66

11.5.7 Direction of rotation

Output side 4	Output side 3
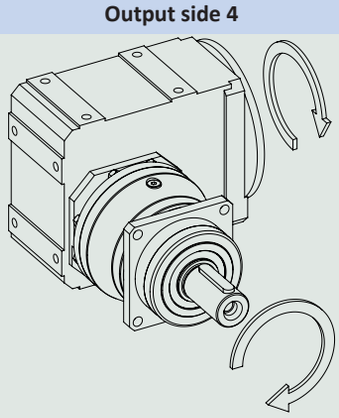	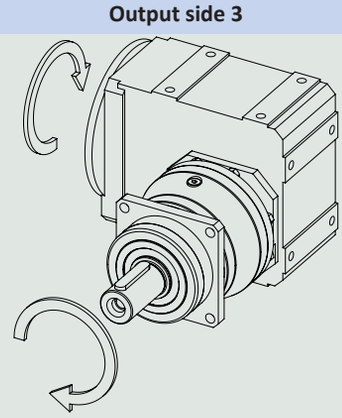

The pictures show mounting position EL1.

11.6 Project configuration

Project your drives using our SERVOsoft designing software. Download SERVOsoft for free at https://www.stoeber.de/en/ServoSoft.

Observe the limit conditions in this chapter to ensure a safe design for your drives.

An explanation of the formula symbols can be found in Chapter [▸ 23.1].

The formula symbols for values actually present in the application are marked with *.

[2] Observe the protection class of all the components.

11.6.1 Calculation of the operating point

Check the following conditions for operating points other than the nominal point M_{2N} specified in the selection tables.

For continuous operation in mounting positions EL1, EL2:

$$n_{1m*} \leq \frac{n_{1maxDBEL1,2}}{fB_T}$$

For continuous operation in mounting positions EL3, EL4, EL5, EL6:

$$n_{1m*} \leq \frac{n_{1maxDBEL3,4,5,6}}{fB_T}$$

For all mounting positions:

$$n_{1max*} \leq \frac{n_{1maxZB}}{fB_T}$$

$$M_{2eff*} \leq M_{2th}$$

$$M_{2acc*} \leq \frac{M_{2acc}}{fB_{ZB}}$$

$$M_{2NOT*} \leq M_{2NOT}$$

$$M_{2eq*} \leq M_{2N} \cdot \frac{S}{fB_{op} \cdot fB_t}$$

Refer to the selection tables for the values for $n_{1maxDBEL1,2}$ and $n_{1maxDBEL3,4,5,6}$, n_{1maxZB}, M_{2acc} (M_{2accHT} for reduced backlash), M_{2NOT}, M_{2N} and S.

The values for fB_T, fB_{op}, fB_t and fB_{ZB} can be found in the corresponding tables in this chapter.

Calculate the thermal limit torque M_{2th} for a duty cycle > 50%.

Example of cyclic operation

The following calculations are based on a representation of the power taken from the output based in accordance with the following example:

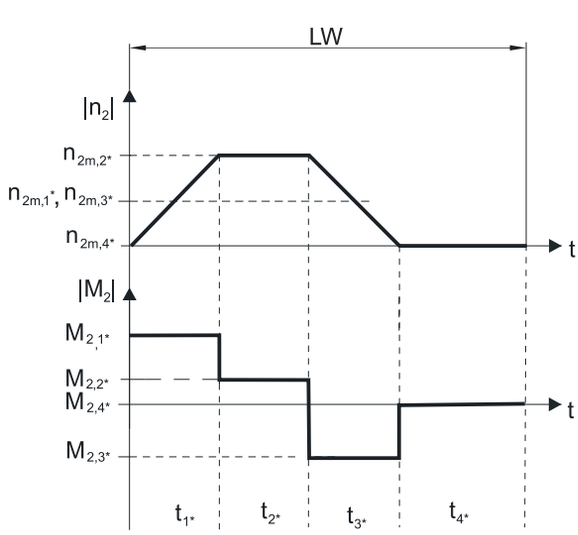

Calculation of the actual average input speed

$$n_{1m*} = n_{2m*} \cdot i$$

$$n_{2m*} = \frac{|n_{2m,1*}| \cdot t_{1*} + \ldots + |n_{2m,n*}| \cdot t_{n*}}{t_{1*} + \ldots + t_{n*}}$$

If $t_{1*} + \ldots + t_{3*} \geq 6$ min, calculate n_{2m*} without the rest phase t_{4*}.

The values for the ratio i can be found in the selection tables.

Calculation of the actual effective torque

$$M_{2eff*} = \sqrt{\frac{t_{1*} \cdot M_{2,1*}^{2} + \ldots + t_{n*} \cdot M_{2,n*}^{2}}{t_{1*} + \ldots + t_{n*}}}$$

Calculation of the actual equivalent torque

$$M_{2eq*} = \sqrt[3]{\frac{\left|n_{2m,1*}\right| \cdot t_{1*} \cdot \left|M_{2,1*}^{3}\right| + \ldots + \left|n_{2m,n*}\right| \cdot t_{n*} \cdot \left|M_{2,n*}^{3}\right|}{\left|n_{2m,1*}\right| \cdot t_{1*} + \ldots + \left|n_{2m,n*}\right| \cdot t_{n*}}}$$

Calculation of the thermal limit torque

Calculate the thermal limit torque M_{2th} for a duty cycle ED_{10} > 50% and the actual average input speed n_{1m*}. (At $K_{mot,th} \leq 0$ you must reduce the average input speed n_{1m*} accordingly or select another geared motor size.)

$$M_{2th} = M_{op} \cdot i \cdot K_{mot,th}$$

$$K_{mot,th} = 0{,}95 - \frac{a_{th}}{1000} \cdot athEL \cdot fB_T \cdot \left(\frac{n_{1m*}}{1000}\right)^2$$

The values for i and a_{th} can be found in the selection tables.

The values for a_{thEL} and fB_T can be found in the corresponding tables in this chapter.

The value for the torque of the motor at operating point M_{op} with the determined average input speed n_{1m*} can be found in the motor curve of Chapter [▶ 17.3]. Note the size, nominal speed n_N and cooling type of the motor. The figure below shows an example of reading the torque M_{op} of a motor with convection cooling at the operating point.

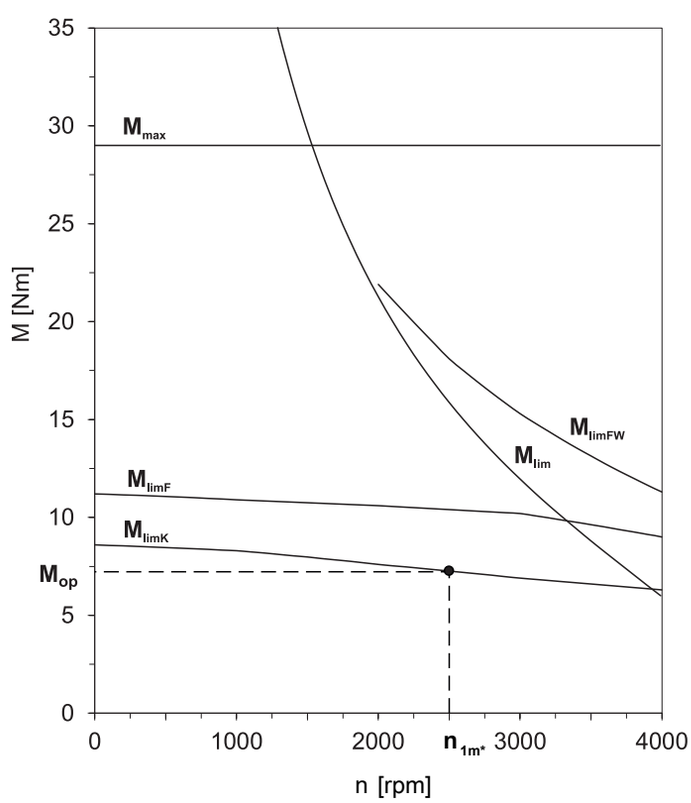

Operating factors

Parameter a_{thEL}

Mounting position	a_{thEL}
EL1, 2	1.0
EL3, 4, 5, 6	1.1

Operating mode	fB_{op}
Uniform continuous operation	1.00
Cyclic operation	1.25
Reversing load cyclic operation	1.40

Run time	fB_t
Daily runtime ≤ 8 h	1.00
Daily runtime ≤ 16 h	1.15
Daily runtime ≤ 24 h	1.20

Cyclic operation	fB_{ZB}
≤ 1000 load changes/hour (LW/h)	1.00
> 1000 load changes/hour (LW/h)	1.15

Temperature		fB_T
Motor cooling	**Surrounding temperature**	
Motor with forced ventilation	≤ 20 °C	0.9
	≤ 30 °C	1.0
	≤ 40 °C	1.15
Motor with convection cooling	≤ 20 °C	1.0
	≤ 30 °C	1.1
	≤ 40 °C	1.25

Notes

- The maximum permitted gear unit temperature (see the "Other product features" chapter) must not be exceeded. Doing so may result in damage to the geared motor.
- For braking from full speed (for example when the power fails or when setting up the machine), note the permitted gear unit torques (M_{2acc}, M_{2NOT}) in the selection tables.

11.6.2 Permitted shaft loads for the output shaft

The values specified in the tables apply to the permitted shaft loads:

- For shaft dimensions in accordance with the catalog
- For output speeds n_{2m*} ≤ 100 rpm ($F^{2axN} = F_{2ax100}$; $F_{2radN} = F_{2rad100}$; $M_{2kN} = M_{2k100}$)
- Only if radial forces on the gear unit are stabilized by its pilots (housing, flange shaft)

Permitted shaft loads for standard bearing S

Type	z_2 [mm]	F_{2ax100} [N]	$F_{2rad100}$ [N]	$F_{2rad,acc}$ [N]	M_{2k100} [Nm]	$M_{2k,acc}$ [Nm]
P2	17.0	500	1200	1300	34	36
P3	17.5	1000	2500	2500	79	79
P4	18.5	1500	4000	4500	146	164
P5	19.5	2300	6500	7000	315	340
P7	23.0	2900	8500	9000	544	576
P8	24.5	4700	13000	18000	852	1179
P9	33.0	6000	18000	27000	1539	2309

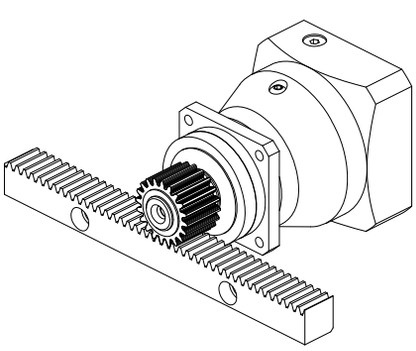

Fig. 1: Recommendation for bearing assignment S (e.g. for straight-cut gearing)

Permitted shaft loads for axially reinforced bearing D

Type	z_2 [mm]	F_{2ax100} [N]	$F_{2rad100}$ [N]	$F_{2rad,acc}$ [N]	M_{2k100} [Nm]	$M_{2k,acc}$ [Nm]
P3	20.0	2500	2750	2750	94	94
P4	22.5	4000	4500	5000	182	203
P5	25.5	6000	7000	8000	382	436
P7	29.0	10000	9500	10000	665	700
P8	32.0	15500	15000	18000	1095	1314
P9	44.0	25000	20000	30000	1930	2895

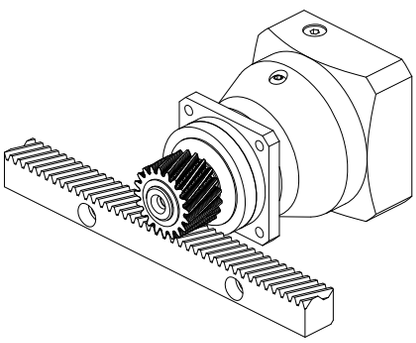

Fig. 2: Recommendation for bearing assignment D (e.g. for helical gearing)

Permitted shaft loads for radially reinforced bearing Z

Type	z_2 [mm]	F_{2ax100} [N]	$F_{2rad100}$ [N]	$F_{2rad,acc}$ [N]	M_{2k100} [Nm]	$M_{2k,acc}$ [Nm]
P3	17.5	600	3000	3000	95	95
P4	18.5	1000	5000	5000	183	183
P5	19.5	1600	8000	8000	388	388
P7	23.0	2000	10000	10000	640	640
P8	24.5	3600	18000	18000	1179	1179
P9	33.0	5000	27000	35000	2309	2993

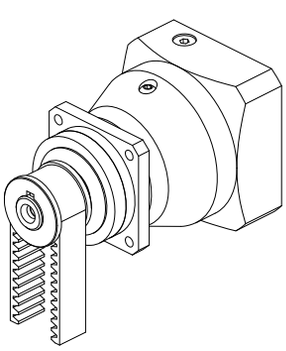

Fig. 3: Recommendation for bearing assignment Z (e.g. for belt drives)

For other output speeds, download diagrams at http://configurator.stoeber.de.

The following applies to output speeds n_{2m*} > 100 rpm:

$$F_{2axN} = \frac{F_{2ax100}}{\sqrt[3]{\frac{n_{2m*}}{100\ \text{rpm}}}} \qquad F_{2radN} = \frac{F_{2rad100}}{\sqrt[3]{\frac{n_{2m*}}{100\ \text{rpm}}}} \qquad M_{2kN} = \frac{M_{2k100}}{\sqrt[3]{\frac{n_{2m*}}{100\ \text{rpm}}}}$$

The values for F_{2ax100}, $F_{2rad100}$ and M_{2k100} can be found in the table "Permitted shaft loads" in this chapter.

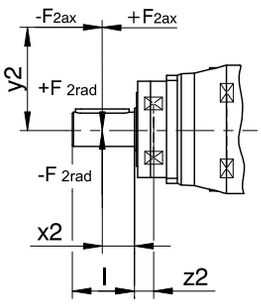

Fig. 4: Force application points

The specified values for $F_{2rad100}$ and $F_{2rad,acc}$ refer to an application of force at the center of the output shaft: $x_2 = l/2$.

Shaft dimensions can be found in the "Dimensional drawings" chapter.

The following applies to other force application points:

$$M_{2k,acc*} = \frac{2 \cdot F_{2ax*} \cdot y_2 + F_{2rad,acc*} \cdot (x_2 + z_2)}{1000} \leq M_{2k,acc}$$

$$F_{2rad,acc*} \leq F_{2rad,acc}$$

$$F_{2ax*} \leq F_{2axN}$$

The values for $F_{2rad,acc}$ and $M_{2k,acc}$ can be found in the table "Permitted shaft loads" in this chapter.

For applications with multiple axial and/or radial forces, you must add the forces as vectors.

In the event of EMERGENCY OFF operation (max. 1000 load changes), you can multiply the permitted forces and torques for F_{2ax100}, $F_{2rad100}$ and M_{2k100} by a factor of two.

Also note the calculation for equivalent values:

$$M_{2k,eq*} = \sqrt[3]{\frac{|n_{2m,1*}| \cdot t_{1*} \cdot |M_{2k,acc,1*}{}^3| + \ldots + |n_{2m,n*}| \cdot t_{n*} \cdot |M_{2k,acc,n*}{}^3|}{|n_{2m,1*}| \cdot t_{1*} + \ldots + |n_{2m,n*}| \cdot t_{n*}}} \leq M_{2kN}$$

$$F_{2rad,eq*} = \sqrt[3]{\frac{|n_{2m,1*}| \cdot t_{1*} \cdot |F_{2rad,acc,1*}{}^3| + \ldots + |n_{2m,n*}| \cdot t_{n*} \cdot |F_{2rad,acc,n*}{}^3|}{|n_{2m,1*}| \cdot t_{1*} + \ldots + |n_{2m,n*}| \cdot t_{n*}}} \leq F_{2radN}$$

The following apply to the bearing service life L_{10h} ($ED_{10} \leq 40\%$):

$L_{10h} > 10000$ h with $1 < M_{2kN}/M_{2k*} < 1.25$

$L_{10h} > 20000$ h with $1.25 < M_{2kN}/M_{2k*} < 1.5$

$L_{10h} > 30000$ h with $1.5 < M_{2kN}/M_{2k*}$

For different duty cycles:

$$L_{10h} > L_{10h(ED_{10}=40\%)} \cdot \frac{40\%}{ED_{10}}$$

11.6.3 Recommendation for radial shaft seal rings

For a duty cycle > 60% and higher surrounding temperatures, we recommend radial shaft seal rings made of FKM at the output.

Properties:

- Excellent temperature resistance
- High chemical stability
- Very good resistance to aging
- Excellent resistance in oils and greases
- For use in the food, beverage and pharmaceutical industries

Leak-proofness

Our gear units are equipped with high-quality radial shaft seal rings and checked for leaks. However, a leak cannot be fully ruled out over the length of use of a gear unit. If you use a gear unit with goods incompatible with the lubricant, you must take measures to prevent direct contact with the gear unit lubricant in case of a leak.

11.6.4 Reverse operation

To ensure lubrication for circulating gearing parts during cyclic reverse operation from ± 20° to ± 90° at the output, pay careful attention to the position of the output shaft for the horizontal mounting of the gear unit, as shown in the diagrams below. The images show the center position of reverse operation. Cyclic reverse operation ≤ ± 20° on request.

Solid shaft without feather key	Solid shaft with feather key
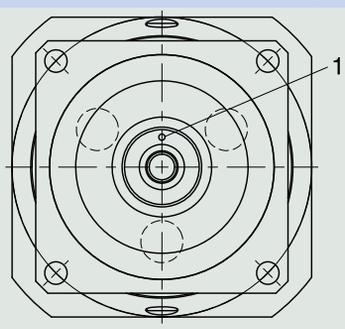	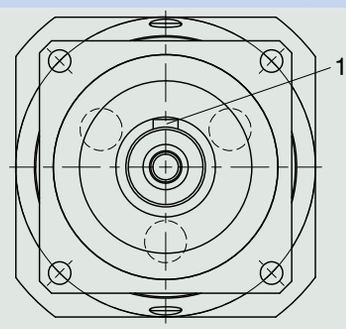
1 Position of the mark: top	1 Position of the feather key: top

Notes

- If you use the solid shaft without a feather key (G), you must note the position of the mark during assembly.
- As an alternative, you can use the solid shaft with a feather key (P). In that case, the feather key functions for position orientation. For a backlash-free connection, also use a clamp.

11.7 Additional documentation

Additional documentation related to the product can be found at
http://www.stoeber.de/en/downloads/

Enter the ID of the documentation in the Search... field.

Documentation	ID
Operating manual for KL/KS/PHK/PHKX/PHQK/PK/PKX right-angle servo gear units and right-angle servo geared motors	443150_en

12 PHKX right-angle planetary geared motors

Table of contents

12.1 Overview 306

12.2 Selection tables 307

12.3 Dimensional drawings 319

12.3.1 F shaft design (flange shaft) 320

12.4 Type designation 322

12.4.1 Nameplate 322

12.5 Product description 323

12.5.1 Input options 323

12.5.2 Installation conditions 323

12.5.3 Mounting positions 323

12.5.4 Lubricants 324

12.5.5 Position of the plug connectors 324

12.5.6 Other product features 324

12.5.7 Direction of rotation 325

12.6 Project configuration 325

12.6.1 Calculation of the operating point 325

12.6.2 Permitted shaft loads for the output shaft 328

12.6.3 Recommendation for radial shaft seal rings 329

12.6.4 Reverse operation 330

12.7 Additional documentation 330

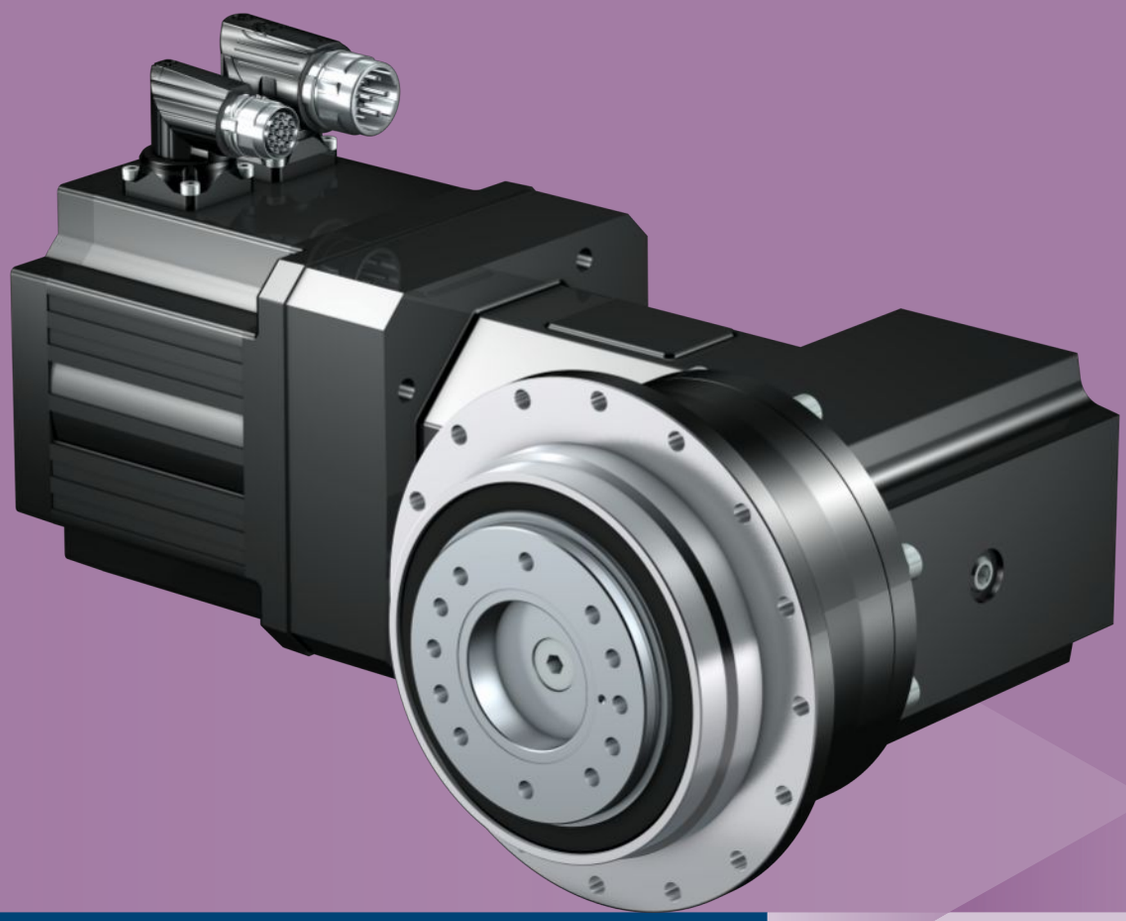

12 Right-angle planetary geared motors

PHKX

12.1 Overview

High-performance precision right-angle planetary geared motors

Features

Power density	★★★★★
Backlash	★★★★★
Price category	€€€€
Shaft load	★★★★★
Smooth operation	★★☆☆☆
Torsional stiffness	★★★★☆
Mass moment of inertia	★★★☆☆
Helical gearing	✓
Maintenance-free	✓
Small installation space	✓
Continuous operation without cooling	✓
Stiff output bearings due to pretension	✓
Reinforced output bearing (PH3 – PH5)	✓ (optional)
Compact and highly dynamic due to direct motor attachment	✓

Key ★☆☆☆☆ good | ★★★★★ excellent
€ Economy | €€€€€ Premium

Technical data

i	4 – 210
M_{2acc}	26 – 2100 Nm
$\Delta\phi_2$	1 – 6 arcmin
η_{get}	92 – 95 %

12.2 Selection tables

The technical data specified in the selection tables applies to:

- Installation altitudes up to 1000 m above sea level
- Surrounding temperatures from 0 °C to 40 °C
- Drives with convection-cooled motors (e.g. EZ401**U**)

For the technical data on drives with forced ventilated motors (e.g. EZ401**B**), refer to http://configurator.stoeber.de.

In the case of the version with a reinforced bearing and gear ratios ≤ 5, the maximum permitted input speed n_{1maxZB} is reduced. You can find values at http://configurator.stoeber.de

An explanation of the formula symbols can be found in Chapter [▶ 23.1].

n_{2N} [rpm]	M_{2N} [Nm]	$M_{2,0}$ [Nm]	a_{th}	S	Type	M_{2acc} [Nm]	M_{2accHT} [Nm]	M_{2NOT} [Nm]	i	i_{exakt}	n_{1maxDB} EL1,2,5,6 [rpm]	n_{1maxDB} EL3,4 [rpm]	n_{1maxZB} [rpm]	J_1 [kgcm²]	$\Delta\varphi_2$ [arcmin]	$\Delta\varphi_{2red}$ [arcmin]	C_2 [Nm/arcmin]	m [kg]
PH331KX (n_{1N} = 3000 rpm, $M_{2acc,max}$ = 75 Nm)																		
100	26	27	31	1.4	PH331_0100KX301_0030 MF EZ301U	60	60	120	30.00	30/1	3500	3500	6000	0.94	5.0	3.0	7.8	5.0
143	18	19	17	2.4	PH331_0070KX301_0030 MF EZ301U	56	56	150	21.00	21/1	3500	3500	6000	0.94	5.5	3.5	8.4	5.0
143	32	33	30	1.4	PH331_0070KX301_0030 MF EZ302U	75	77	150	21.00	21/1	3500	3500	6000	1.0	5.5	3.5	8.4	5.6
143	41	43	38	1.1	PH331_0070KX301_0030 MF EZ303U	75	77	150	21.00	21/1	3500	3500	6000	1.1	5.5	3.5	8.4	6.1
150	18	18	28	2.0	PH331_0100KX301_0020 MF EZ301U	53	53	120	20.00	20/1	3500	3000	5500	1.0	5.0	3.0	7.8	5.0
150	30	32	48	1.2	PH331_0100KX301_0020 MF EZ302U	60	60	120	20.00	20/1	3500	3000	5500	1.1	5.0	3.0	7.8	5.6
200	13	13	13	3.2	PH331_0050KX301_0030 MF EZ301U	40	40	130	15.00	15/1	3500	3500	6000	0.94	6.0	4.0	6.9	5.0
200	23	24	23	1.9	PH331_0050KX301_0030 MF EZ302U	62	62	130	15.00	15/1	3500	3500	6000	1.0	6.0	4.0	6.9	5.6
200	29	31	29	1.4	PH331_0050KX301_0030 MF EZ303U	62	62	130	15.00	15/1	3500	3500	6000	1.2	6.0	4.0	6.9	6.1
200	40	43	40	1.1	PH331_0050KX301_0030 MF EZ401U	62	62	130	15.00	15/1	3500	3500	6000	1.7	6.0	4.0	6.9	7.5
214	12	13	16	3.7	PH331_0070KX301_0020 MF EZ301U	37	37	150	14.00	14/1	3500	3000	5500	1.0	5.5	3.5	8.4	5.0
214	21	22	27	2.1	PH331_0070KX301_0020 MF EZ302U	66	66	150	14.00	14/1	3500	3000	5500	1.1	5.5	3.5	8.4	5.6
214	27	29	35	1.6	PH331_0070KX301_0020 MF EZ303U	75	77	150	14.00	14/1	3500	3000	5500	1.2	5.5	3.5	8.4	6.1
214	37	40	47	1.2	PH331_0070KX301_0020 MF EZ401U	75	77	150	14.00	14/1	3500	3000	5500	1.7	5.5	3.5	8.4	7.5
300	8.8	9.0	12	4.8	PH331_0050KX301_0020 MF EZ301U	26	26	130	10.00	10/1	3500	3000	5500	1.0	6.0	4.0	6.9	5.0
300	15	16	20	2.8	PH331_0050KX301_0020 MF EZ302U	47	47	130	10.00	10/1	3500	3000	5500	1.1	6.0	4.0	6.9	5.6
300	20	21	27	2.1	PH331_0050KX301_0020 MF EZ303U	62	62	130	10.00	10/1	3500	3000	5500	1.2	6.0	4.0	6.9	6.1
300	26	28	36	1.6	PH331_0050KX301_0020 MF EZ401U	62	62	130	10.00	10/1	3500	3000	5500	1.8	6.0	4.0	6.9	7.5
429	11	11	26	3.7	PH331_0070KX301_0010 MF EZ302U	33	33	150	7.000	7/1	3000	2500	4500	1.3	5.5	3.5	8.4	5.6
429	14	14	33	2.9	PH331_0070KX301_0010 MF EZ303U	46	46	150	7.000	7/1	3000	2500	4500	1.4	5.5	3.5	8.4	6.1
429	19	20	45	2.1	PH331_0070KX301_0010 MF EZ401U	56	56	150	7.000	7/1	3000	2500	4500	2.0	5.5	3.5	8.4	7.5
429	31	34	76	1.3	PH331_0070KX301_0010 MF EZ402U	75	77	150	7.000	7/1	3000	2500	4500	2.7	5.5	3.5	8.4	8.6
600	9.8	10	24	4.0	PH331_0050KX301_0010 MF EZ303U	33	33	110	5.000	5/1	3000	2500	4500	1.5	6.0	4.0	6.9	6.1
600	13	14	32	3.0	PH331_0050KX301_0010 MF EZ401U	40	40	110	5.000	5/1	3000	2500	4500	2.0	6.0	4.0	6.9	7.5
600	22	25	54	1.8	PH331_0050KX301_0010 MF EZ402U	62	62	110	5.000	5/1	3000	2500	4500	2.7	6.0	4.0	6.9	8.6
600	33	41	80	1.2	PH331_0050KX301_0010 MF EZ404U	62	62	110	5.000	5/1	3000	2500	4500	4.1	6.0	4.0	6.9	11
PH331KX (n_{1N} = 6000 rpm, $M_{2acc,max}$ = 75 Nm)																		
200	25	27	33	1.3	PH331_0100KX301_0030 MF EZ301U	60	60	120	30.00	30/1	3500	3500	6000	0.94	5.0	3.0	7.8	5.0
286	18	19	17	2.5	PH331_0070KX301_0030 MF EZ301U	56	56	150	21.00	21/1	3500	3500	6000	0.94	5.5	3.5	8.4	5.0
286	30	33	28	1.5	PH331_0070KX301_0030 MF EZ302U	75	77	150	21.00	21/1	3500	3500	6000	1.0	5.5	3.5	8.4	5.6
286	39	45	36	1.2	PH331_0070KX301_0030 MF EZ303U	75	77	150	21.00	21/1	3500	3500	6000	1.1	5.5	3.5	8.4	6.1
400	13	13	16	2.6	PH331_0050KX301_0030 MF EZ301U	40	40	130	15.00	15/1	3500	3500	6000	0.94	6.0	4.0	6.9	5.0
400	21	24	27	1.6	PH331_0050KX301_0030 MF EZ302U	62	62	130	15.00	15/1	3500	3500	6000	1.0	6.0	4.0	6.9	5.6
400	28	32	35	1.2	PH331_0050KX301_0030 MF EZ303U	62	62	130	15.00	15/1	3500	3500	6000	1.2	6.0	4.0	6.9	6.1
400	33	40	41	1.0	PH331_0050KX301_0030 MF EZ401U	62	62	130	15.00	15/1	3500	3500	6000	1.7	6.0	4.0	6.9	7.5
PH332KX (n_{1N} = 3000 rpm, $M_{2acc,max}$ = 80 Nm)																		
54	48	49	54	1.0	PH332_0280KX301_0020 MF EZ301U	75	75	150	56.00	56/1	3500	3000	5500	1.0	4.5	2.5	12	5.4
60	43	44	49	1.2	PH332_0250KX301_0020 MF EZ301U	80	85	160	50.00	50/1	3500	3000	5500	1.0	4.5	2.5	13	5.4
75	34	35	43	1.3	PH332_0200KX301_0020 MF EZ301U	80	85	160	40.00	40/1	3500	3000	5500	1.0	4.5	2.5	13	5.4
86	30	30	57	1.7	PH332_0350KX301_0010 MF EZ301U	80	85	160	35.00	35/1	3000	2500	4500	1.2	4.5	2.5	13	5.4
PH431KX (n_{1N} = 3000 rpm, $M_{2acc,max}$ = 160 Nm)																		
100	26	27	17	2.8	PH431_0100KX401_0030 MF EZ301U	79	79	230	30.00	30/1	3000	3000	5500	1.6	4.0	2.0	18	9.4
100	45	48	28	1.7	PH431_0100KX401_0030 MF EZ302U	120	120	230	30.00	30/1	3000	3000	5500	1.7	4.0	2.0	18	10
100	59	62	37	1.3	PH431_0100KX401_0030 MF EZ303U	120	120	230	30.00	30/1	3000	3000	5500	1.8	4.0	2.0	18	10
143	18	19	9.7	4.9	PH431_0070KX401_0030 MF EZ301U	56	56	320	21.00	21/1	3000	3000	5500	1.6	4.5	2.5	19	9.4
143	32	33	17	2.9	PH431_0070KX401_0030 MF EZ302U	99	99	320	21.00	21/1	3000	3000	5500	1.7	4.5	2.5	19	10
143	41	43	22	2.2	PH431_0070KX401_0030 MF EZ303U	140	140	320	21.00	21/1	3000	3000	5500	1.9	4.5	2.5	19	10
143	56	60	29	1.6	PH431_0070KX401_0030 MF EZ401U	160	170	320	21.00	21/1	3000	3000	5500	2.4	4.5	2.5	19	12
143	85	93	45	1.1	PH431_0070KX401_0030 MF EZ501U	160	170	320	21.00	21/1	3000	3000	5500	4.4	4.5	2.5	19	13

n_{2N} [rpm]	M_{2N} [Nm]	$M_{2,0}$ [Nm]	a_{th}	S	Type	M_{2acc} [Nm]	M_{2accHT} [Nm]	M_{2NOT} [Nm]	i	i_{exakt}	n_{1maxDB} EL1,2,5,6 [rpm]	n_{1maxDB} EL3,4 [rpm]	n_{1maxZB} [rpm]	J_1 [kgcm²]	$\Delta\varphi_2$ [arcmin]	$\Delta\varphi_{2red}$ [arcmin]	C_2 [Nm/ arcmin]	m [kg]
PH431KX (n_{1N} = 3000 rpm, $M_{2acc,max}$ = 160 Nm)																		
150	18	18	15	4.3	PH431_0100KX401_0020 MF EZ301U	53	53	230	20.00	20/1	2500	2500	5000	1.8	4.0	2.0	18	9.4
150	30	32	26	2.5	PH431_0100KX401_0020 MF EZ302U	95	95	230	20.00	20/1	2500	2500	5000	1.9	4.0	2.0	18	10
150	39	41	34	1.9	PH431_0100KX401_0020 MF EZ303U	120	120	230	20.00	20/1	2500	2500	5000	2.0	4.0	2.0	18	10
150	53	57	45	1.4	PH431_0100KX401_0020 MF EZ401U	120	120	230	20.00	20/1	2500	2500	5000	2.6	4.0	2.0	18	12
200	23	24	13	3.7	PH431_0050KX401_0030 MF EZ302U	71	71	260	15.00	15/1	3000	3000	5500	1.8	5.0	3.0	15	10
200	29	31	17	2.9	PH431_0050KX401_0030 MF EZ303U	99	99	260	15.00	15/1	3000	3000	5500	1.9	5.0	3.0	15	10
200	40	43	22	2.1	PH431_0050KX401_0030 MF EZ401U	120	120	260	15.00	15/1	3000	3000	5500	2.4	5.0	3.0	15	12
200	61	67	34	1.4	PH431_0050KX401_0030 MF EZ501U	120	120	260	15.00	15/1	3000	3000	5500	4.4	5.0	3.0	15	13
200	67	74	38	1.3	PH431_0050KX401_0030 MF EZ402U	120	120	260	15.00	15/1	3000	3000	5500	3.1	5.0	3.0	15	13
214	21	22	15	4.3	PH431_0070KX401_0020 MF EZ302U	66	66	320	14.00	14/1	2500	2500	5000	2.0	4.5	2.5	19	10
214	27	29	20	3.3	PH431_0070KX401_0020 MF EZ303U	93	93	320	14.00	14/1	2500	2500	5000	2.1	4.5	2.5	19	10
214	37	40	26	2.4	PH431_0070KX401_0020 MF EZ401U	110	110	320	14.00	14/1	2500	2500	5000	2.6	4.5	2.5	19	12
214	57	62	41	1.6	PH431_0070KX401_0020 MF EZ501U	160	170	320	14.00	14/1	2500	2500	5000	4.6	4.5	2.5	19	13
214	62	69	44	1.4	PH431_0070KX401_0020 MF EZ402U	160	170	320	14.00	14/1	2500	2500	5000	3.3	4.5	2.5	19	13
250	18	19	13	3.7	PH431_0040KX401_0030 MF EZ302U	57	57	210	12.00	12/1	3000	3000	5500	1.8	5.5	3.5	11	10
250	23	25	17	2.9	PH431_0040KX401_0030 MF EZ303U	79	79	210	12.00	12/1	3000	3000	5500	1.9	5.5	3.5	11	10
250	32	34	22	2.1	PH431_0040KX401_0030 MF EZ401U	96	96	210	12.00	12/1	3000	3000	5500	2.4	5.5	3.5	11	12
250	49	53	34	1.4	PH431_0040KX401_0030 MF EZ501U	96	96	210	12.00	12/1	3000	3000	5500	4.4	5.5	3.5	11	13
250	53	59	38	1.3	PH431_0040KX401_0030 MF EZ402U	96	96	210	12.00	12/1	3000	3000	5500	3.1	5.5	3.5	11	13
300	20	21	15	4.3	PH431_0050KX401_0020 MF EZ303U	66	66	260	10.00	10/1	2500	2500	5000	2.1	5.0	3.0	15	10
300	26	28	20	3.2	PH431_0050KX401_0020 MF EZ401U	80	80	260	10.00	10/1	2500	2500	5000	2.6	5.0	3.0	15	12
300	41	44	31	2.1	PH431_0050KX401_0020 MF EZ501U	120	120	260	10.00	10/1	2500	2500	5000	4.6	5.0	3.0	15	13
300	44	49	34	1.9	PH431_0050KX401_0020 MF EZ402U	120	120	260	10.00	10/1	2500	2500	5000	3.3	5.0	3.0	15	13
300	65	81	50	1.3	PH431_0050KX401_0020 MF EZ404U	120	120	260	10.00	10/1	2500	2500	5000	4.7	5.0	3.0	15	15
300	70	76	54	1.2	PH431_0050KX401_0020 MF EZ502U	120	120	260	10.00	10/1	2500	2500	5000	6.9	5.0	3.0	15	14
300	70	78	54	1.2	PH431_0050KX401_0020 MF EZ701U	120	120	260	10.00	10/1	2500	2500	5000	10	5.0	3.0	15	16
375	16	17	15	4.3	PH431_0040KX401_0020 MF EZ303U	53	53	210	8.000	8/1	2500	2500	5000	2.1	5.5	3.5	11	10
375	21	23	20	3.2	PH431_0040KX401_0020 MF EZ401U	64	64	210	8.000	8/1	2500	2500	5000	2.7	5.5	3.5	11	12
375	33	36	31	2.1	PH431_0040KX401_0020 MF EZ501U	96	96	210	8.000	8/1	2500	2500	5000	4.6	5.5	3.5	11	13
375	36	39	34	1.9	PH431_0040KX401_0020 MF EZ402U	96	96	210	8.000	8/1	2500	2500	5000	3.4	5.5	3.5	11	13
375	52	65	50	1.3	PH431_0040KX401_0020 MF EZ404U	96	96	210	8.000	8/1	2500	2500	5000	4.7	5.5	3.5	11	15
375	56	61	54	1.2	PH431_0040KX401_0020 MF EZ502U	96	96	210	8.000	8/1	2500	2500	5000	6.9	5.5	3.5	11	14
375	56	63	54	1.2	PH431_0040KX401_0020 MF EZ701U	96	96	210	8.000	8/1	2500	2500	5000	10	5.5	3.5	11	16
429	19	20	27	4.0	PH431_0070KX401_0010 MF EZ401U	56	56	320	7.000	7/1	2500	2000	4000	3.4	4.5	2.5	19	12
429	28	31	41	2.6	PH431_0070KX401_0010 MF EZ501U	110	110	320	7.000	7/1	2500	2000	4000	5.4	4.5	2.5	19	13
429	31	34	45	2.4	PH431_0070KX401_0010 MF EZ402U	110	110	320	7.000	7/1	2500	2000	4000	4.1	4.5	2.5	19	13
429	46	57	66	1.6	PH431_0070KX401_0010 MF EZ404U	160	170	320	7.000	7/1	2500	2000	4000	5.5	4.5	2.5	19	15
429	49	53	71	1.5	PH431_0070KX401_0010 MF EZ502U	160	170	320	7.000	7/1	2500	2000	4000	7.7	4.5	2.5	19	14
429	49	55	71	1.5	PH431_0070KX401_0010 MF EZ701U	130	130	320	7.000	7/1	2500	2000	4000	11	4.5	2.5	19	16
429	64	73	93	1.2	PH431_0070KX401_0010 MF EZ503U	160	170	320	7.000	7/1	2500	2000	4000	10	4.5	2.5	19	16
600	20	22	30	3.7	PH431_0050KX401_0010 MF EZ501U	76	76	260	5.000	5/1	2500	2000	4000	5.6	5.0	3.0	15	13
600	22	25	32	3.3	PH431_0050KX401_0010 MF EZ402U	76	76	260	5.000	5/1	2500	2000	4000	4.3	5.0	3.0	15	13
600	33	41	47	2.3	PH431_0050KX401_0010 MF EZ404U	120	120	260	5.000	5/1	2500	2000	4000	5.6	5.0	3.0	15	15
600	35	38	51	2.1	PH431_0050KX401_0010 MF EZ502U	120	120	260	5.000	5/1	2500	2000	4000	7.9	5.0	3.0	15	14
600	35	39	51	2.1	PH431_0050KX401_0010 MF EZ701U	95	95	260	5.000	5/1	2500	2000	4000	11	5.0	3.0	15	16
600	46	52	67	1.6	PH431_0050KX401_0010 MF EZ503U	120	120	260	5.000	5/1	2500	2000	4000	10	5.0	3.0	15	16
600	57	68	83	1.3	PH431_0050KX401_0010 MF EZ702U	120	120	260	5.000	5/1	2500	2000	4000	16	5.0	3.0	15	19
600	64	76	93	1.2	PH431_0050KX401_0010 MF EZ505U	120	120	260	5.000	5/1	2500	2000	4000	15	5.0	3.0	15	19
750	16	18	26	4.1	PH431_0040KX401_0010 MF EZ501U	61	61	210	4.000	4/1	2500	2000	4000	5.8	5.5	3.5	11	13
750	18	20	29	3.8	PH431_0040KX401_0010 MF EZ402U	61	61	210	4.000	4/1	2500	2000	4000	4.5	5.5	3.5	11	13
750	26	33	42	2.6	PH431_0040KX401_0010 MF EZ404U	96	96	210	4.000	4/1	2500	2000	4000	5.8	5.5	3.5	11	15
750	28	30	45	2.4	PH431_0040KX401_0010 MF EZ502U	96	96	210	4.000	4/1	2500	2000	4000	8.1	5.5	3.5	11	14
750	28	31	45	2.4	PH431_0040KX401_0010 MF EZ701U	76	76	210	4.000	4/1	2500	2000	4000	11	5.5	3.5	11	16
750	37	42	59	1.8	PH431_0040KX401_0010 MF EZ503U	96	96	210	4.000	4/1	2500	2000	4000	10	5.5	3.5	11	16
750	45	54	73	1.5	PH431_0040KX401_0010 MF EZ702U	96	96	210	4.000	4/1	2500	2000	4000	17	5.5	3.5	11	19
750	51	61	82	1.3	PH431_0040KX401_0010 MF EZ505U	96	96	210	4.000	4/1	2500	2000	4000	15	5.5	3.5	11	19
PH432KX (n_{1N} = 3000 rpm, $M_{2acc,max}$ = 160 Nm)																		
21	119	122	57	1.0	PH432_0700KX301_0020 MF EZ301U	160	160	320	140.0	140/1	3500	3000	5500	1.0	3.0	1.0	27	8.0
25	102	104	39	1.1	PH432_0400KX301_0030 MF EZ301U	160	170	310	120.0	120/1	3500	3500	6000	0.95	3.5	1.5	29	8.0
29	89	91	34	1.2	PH432_0350KX301_0030 MF EZ301U	160	170	320	105.0	105/1	3500	3500	6000	0.94	3.5	1.5	30	8.0
30	85	87	41	1.4	PH432_0500KX301_0020 MF EZ301U	160	170	320	100.0	100/1	3500	3000	5500	1.0	3.0	1.0	30	8.0
36	72	73	32	1.3	PH432_0280KX301_0030 MF EZ301U	160	170	310	84.00	84/1	3500	3500	6000	0.95	3.5	1.5	29	8.0
38	68	70	35	1.6	PH432_0400KX301_0020 MF EZ301U	160	170	310	80.00	80/1	3500	3000	5500	1.0	3.5	1.5	29	8.0
40	64	65	27	1.6	PH432_0250KX301_0030 MF EZ301U	160	170	320	75.00	75/1	3500	3500	6000	0.94	3.5	1.5	29	8.0

n_{2N} [rpm]	M_{2N} [Nm]	$M_{2,0}$ [Nm]	a_{th}	S	Type	M_{2acc} [Nm]	M_{2accHT} [Nm]	M_{2NOT} [Nm]	i	i_{exakt}	n_{1maxDB} EL1,2,5,6 [rpm]	n_{1maxDB} EL3,4 [rpm]	n_{1maxZB} [rpm]	J_1 [kgcm²]	$\Delta\varphi_2$ [arcmin]	$\Delta\varphi_{2red}$ [arcmin]	C_2 [Nm/arcmin]	m [kg]
PH432KX (n_{1N} = 3000 rpm, $M_{2acc,max}$ = 160 Nm)																		
43	60	61	31	1.8	PH432_0350KX301_0020 MF EZ301U	160	170	320	70.00	70/1	3500	3000	5500	1.0	3.5	1.5	30	8.0
43	102	108	53	1.1	PH432_0350KX301_0020 MF EZ302U	160	170	320	70.00	70/1	3500	3000	5500	1.1	3.5	1.5	30	8.6
50	51	52	23	1.9	PH432_0200KX301_0030 MF EZ301U	150	150	300	60.00	60/1	3500	3500	6000	0.95	3.5	1.5	27	8.0
50	87	92	39	1.1	PH432_0200KX301_0030 MF EZ302U	150	150	300	60.00	60/1	3500	3500	6000	1.0	3.5	1.5	27	8.6
54	48	49	29	2.0	PH432_0280KX301_0020 MF EZ301U	140	140	310	56.00	56/1	3500	3000	5500	1.0	3.5	1.5	29	8.0
54	82	86	49	1.2	PH432_0280KX301_0020 MF EZ302U	160	170	310	56.00	56/1	3500	3000	5500	1.1	3.5	1.5	29	8.6
60	43	44	24	2.3	PH432_0250KX301_0020 MF EZ301U	130	130	320	50.00	50/1	3500	3000	5500	1.0	3.5	1.5	29	8.0
60	73	77	42	1.4	PH432_0250KX301_0020 MF EZ302U	160	170	320	50.00	50/1	3500	3000	5500	1.1	3.5	1.5	29	8.6
60	95	100	54	1.1	PH432_0250KX301_0020 MF EZ303U	160	170	320	50.00	50/1	3500	3000	5500	1.2	3.5	1.5	29	9.1
63	41	42	19	2.2	PH432_0160KX301_0030 MF EZ301U	120	120	310	48.00	48/1	3500	3500	6000	0.95	3.5	1.5	25	8.0
63	70	74	33	1.3	PH432_0160KX301_0030 MF EZ302U	160	170	310	48.00	48/1	3500	3500	6000	1.1	3.5	1.5	25	8.6
75	34	35	20	2.8	PH432_0200KX301_0020 MF EZ301U	100	100	300	40.00	40/1	3500	3000	5500	1.0	3.5	1.5	27	8.0
75	58	62	35	1.6	PH432_0200KX301_0020 MF EZ302U	150	150	300	40.00	40/1	3500	3000	5500	1.1	3.5	1.5	27	8.6
75	76	80	46	1.3	PH432_0200KX301_0020 MF EZ303U	150	150	300	40.00	40/1	3500	3000	5500	1.2	3.5	1.5	27	9.1
86	30	30	27	3.6	PH432_0350KX301_0010 MF EZ301U	90	90	320	35.00	35/1	3000	2500	4500	1.3	3.5	1.5	30	8.0
86	51	54	46	2.1	PH432_0350KX301_0010 MF EZ302U	160	160	320	35.00	35/1	3000	2500	4500	1.4	3.5	1.5	30	8.6
86	66	70	60	1.6	PH432_0350KX301_0010 MF EZ303U	160	170	320	35.00	35/1	3000	2500	4500	1.5	3.5	1.5	30	9.1
86	90	96	81	1.2	PH432_0350KX301_0010 MF EZ401U	160	170	320	35.00	35/1	3000	2500	4500	2.0	3.5	1.5	30	10
94	27	28	17	3.3	PH432_0160KX301_0020 MF EZ301U	82	82	310	32.00	32/1	3500	3000	5500	1.0	3.5	1.5	25	8.0
94	47	49	30	1.9	PH432_0160KX301_0020 MF EZ302U	150	150	310	32.00	32/1	3500	3000	5500	1.1	3.5	1.5	25	8.6
94	61	64	38	1.5	PH432_0160KX301_0020 MF EZ303U	160	170	310	32.00	32/1	3500	3000	5500	1.2	3.5	1.5	25	9.1
94	82	88	52	1.1	PH432_0160KX301_0020 MF EZ401U	160	170	310	32.00	32/1	3500	3000	5500	1.8	3.5	1.5	25	10
PH432KX (n_{1N} = 6000 rpm, $M_{2acc,max}$ = 160 Nm)																		
50	98	104	37	1.1	PH432_0400KX301_0030 MF EZ301U	160	170	310	120.0	120/1	3500	3500	6000	0.95	3.5	1.5	29	8.0
57	86	91	33	1.3	PH432_0350KX301_0030 MF EZ301U	160	170	320	105.0	105/1	3500	3500	6000	0.94	3.5	1.5	30	8.0
71	68	73	30	1.4	PH432_0280KX301_0030 MF EZ301U	160	170	310	84.00	84/1	3500	3500	6000	0.95	3.5	1.5	29	8.0
80	61	65	26	1.6	PH432_0250KX301_0030 MF EZ301U	160	170	320	75.00	75/1	3500	3500	6000	0.94	3.5	1.5	29	8.0
100	49	52	22	1.9	PH432_0200KX301_0030 MF EZ301U	150	150	300	60.00	60/1	3500	3500	6000	0.95	3.5	1.5	27	8.0
100	82	92	37	1.2	PH432_0200KX301_0030 MF EZ302U	150	150	300	60.00	60/1	3500	3500	6000	1.0	3.5	1.5	27	8.6
125	39	42	18	2.3	PH432_0160KX301_0030 MF EZ301U	120	120	310	48.00	48/1	3500	3500	6000	0.95	3.5	1.5	25	8.0
125	66	74	31	1.4	PH432_0160KX301_0030 MF EZ302U	160	170	310	48.00	48/1	3500	3500	6000	1.1	3.5	1.5	25	8.6
125	86	99	40	1.0	PH432_0160KX301_0030 MF EZ303U	160	170	310	48.00	48/1	3500	3500	6000	1.2	3.5	1.5	25	9.1
PH531KX (n_{1N} = 3000 rpm, $M_{2acc,max}$ = 370 Nm)																		
100	79	85	23	2.3	PH531_0100KX501_0030 MF EZ401U	240	240	580	30.00	30/1	3000	3000	5000	5.7	4.0	2.0	44	18
100	122	133	36	1.5	PH531_0100KX501_0030 MF EZ501U	290	290	580	30.00	30/1	3000	3000	5000	7.7	4.0	2.0	44	19
100	133	148	39	1.4	PH531_0100KX501_0030 MF EZ402U	290	290	580	30.00	30/1	3000	3000	5000	6.4	4.0	2.0	44	19
143	56	60	14	3.8	PH531_0070KX501_0030 MF EZ401U	170	170	710	21.00	21/1	3000	3000	5000	5.8	4.5	2.5	46	18
143	85	93	21	2.5	PH531_0070KX501_0030 MF EZ501U	320	320	710	21.00	21/1	3000	3000	5000	7.7	4.5	2.5	46	19
143	93	103	23	2.3	PH531_0070KX501_0030 MF EZ402U	320	320	710	21.00	21/1	3000	3000	5000	6.5	4.5	2.5	46	19
143	137	171	34	1.5	PH531_0070KX501_0030 MF EZ404U	370	390	710	21.00	21/1	3000	3000	5000	7.8	4.5	2.5	46	21
143	147	159	37	1.4	PH531_0070KX501_0030 MF EZ502U	370	390	710	21.00	21/1	3000	3000	5000	10	4.5	2.5	46	20
143	147	165	37	1.4	PH531_0070KX501_0030 MF EZ701U	370	390	710	21.00	21/1	3000	3000	5000	13	4.5	2.5	46	22
143	193	220	48	1.1	PH531_0070KX501_0030 MF EZ503U	370	390	710	21.00	21/1	3000	3000	5000	12	4.5	2.5	46	22
150	53	57	21	3.4	PH531_0100KX501_0020 MF EZ401U	160	160	580	20.00	20/1	2500	2500	4500	6.3	4.0	2.0	44	18
150	81	89	32	2.2	PH531_0100KX501_0020 MF EZ501U	290	290	580	20.00	20/1	2500	2500	4500	8.2	4.0	2.0	44	19
150	89	98	35	2.0	PH531_0100KX501_0020 MF EZ402U	290	290	580	20.00	20/1	2500	2500	4500	7.0	4.0	2.0	44	19
150	130	163	52	1.4	PH531_0100KX501_0020 MF EZ404U	290	290	580	20.00	20/1	2500	2500	4500	8.3	4.0	2.0	44	21
150	140	151	55	1.3	PH531_0100KX501_0020 MF EZ502U	290	290	580	20.00	20/1	2500	2500	4500	11	4.0	2.0	44	20
150	140	157	55	1.3	PH531_0100KX501_0020 MF EZ701U	290	290	580	20.00	20/1	2500	2500	4500	14	4.0	2.0	44	22
200	61	67	15	3.4	PH531_0050KX501_0030 MF EZ501U	230	230	650	15.00	15/1	3000	3000	5000	7.8	5.0	3.0	37	19
200	67	74	17	3.1	PH531_0050KX501_0030 MF EZ402U	230	230	650	15.00	15/1	3000	3000	5000	6.5	5.0	3.0	37	19
200	98	122	25	2.1	PH531_0050KX501_0030 MF EZ404U	300	300	650	15.00	15/1	3000	3000	5000	7.9	5.0	3.0	37	21
200	105	113	26	2.0	PH531_0050KX501_0030 MF EZ502U	300	300	650	15.00	15/1	3000	3000	5000	10	5.0	3.0	37	20
200	105	118	26	2.0	PH531_0050KX501_0030 MF EZ701U	280	280	650	15.00	15/1	3000	3000	5000	13	5.0	3.0	37	22
200	138	157	35	1.5	PH531_0050KX501_0030 MF EZ503U	300	300	650	15.00	15/1	3000	3000	5000	12	5.0	3.0	37	22
200	170	204	43	1.2	PH531_0050KX501_0030 MF EZ702U	300	300	650	15.00	15/1	3000	3000	5000	19	5.0	3.0	37	24
200	191	227	48	1.1	PH531_0050KX501_0030 MF EZ505U	300	300	650	15.00	15/1	3000	3000	5000	17	5.0	3.0	37	24
214	57	62	19	3.7	PH531_0070KX501_0020 MF EZ501U	210	210	710	14.00	14/1	2500	2500	4500	8.3	4.5	2.5	46	19
214	62	69	21	3.4	PH531_0070KX501_0020 MF EZ402U	210	210	710	14.00	14/1	2500	2500	4500	7.0	4.5	2.5	46	19
214	91	114	31	2.3	PH531_0070KX501_0020 MF EZ404U	370	380	710	14.00	14/1	2500	2500	4500	8.4	4.5	2.5	46	21
214	98	106	33	2.1	PH531_0070KX501_0020 MF EZ502U	370	390	710	14.00	14/1	2500	2500	4500	11	4.5	2.5	46	20
214	98	110	33	2.1	PH531_0070KX501_0020 MF EZ701U	260	260	710	14.00	14/1	2500	2500	4500	14	4.5	2.5	46	22
214	128	147	44	1.6	PH531_0070KX501_0020 MF EZ503U	370	390	710	14.00	14/1	2500	2500	4500	13	4.5	2.5	46	22
214	159	191	54	1.3	PH531_0070KX501_0020 MF EZ702U	370	390	710	14.00	14/1	2500	2500	4500	19	4.5	2.5	46	24

n_{2N} [rpm]	M_{2N} [Nm]	$M_{2,0}$ [Nm]	a_{th}	S	Type	M_{2acc} [Nm]	M_{2accHT} [Nm]	M_{2NOT} [Nm]	i	i_{exakt}	n_{1maxDB} EL1,2,5,6 [rpm]	n_{1maxDB} EL3,4 [rpm]	n_{1maxZB} [rpm]	J_1 [kgcm²]	$\Delta\varphi_2$ [arcmin]	$\Delta\varphi_{2red}$ [arcmin]	C_2 [Nm/arcmin]	m [kg]
PH531KX (n_{1N} = 3000 rpm, $M_{2acc,max}$ = 370 Nm)																		
214	179	212	61	1.2	PH531_0070KX501_0020 MF EZ505U	370	390	710	14.00	14/1	2500	2500	4500	18	4.5	2.5	46	24
250	49	53	15	3.4	PH531_0040KX501_0030 MF EZ501U	180	180	520	12.00	12/1	3000	3000	5000	7.9	5.5	3.5	28	19
250	53	59	17	3.1	PH531_0040KX501_0030 MF EZ402U	180	180	520	12.00	12/1	3000	3000	5000	6.6	5.5	3.5	28	19
250	78	98	25	2.1	PH531_0040KX501_0030 MF EZ404U	240	240	520	12.00	12/1	3000	3000	5000	7.9	5.5	3.5	28	21
250	84	91	26	2.0	PH531_0040KX501_0030 MF EZ502U	240	240	520	12.00	12/1	3000	3000	5000	10	5.5	3.5	28	20
250	84	94	26	2.0	PH531_0040KX501_0030 MF EZ701U	230	230	520	12.00	12/1	3000	3000	5000	13	5.5	3.5	28	22
250	110	126	35	1.5	PH531_0040KX501_0030 MF EZ503U	240	240	520	12.00	12/1	3000	3000	5000	13	5.5	3.5	28	22
250	136	163	43	1.2	PH531_0040KX501_0030 MF EZ702U	240	240	520	12.00	12/1	3000	3000	5000	19	5.5	3.5	28	24
250	153	182	48	1.1	PH531_0040KX501_0030 MF EZ505U	240	240	520	12.00	12/1	3000	3000	5000	17	5.5	3.5	28	24
300	44	49	15	4.7	PH531_0050KX501_0020 MF EZ402U	150	150	650	10.00	10/1	2500	2500	4500	7.2	5.0	3.0	37	19
300	65	81	22	3.2	PH531_0050KX501_0020 MF EZ404U	270	270	650	10.00	10/1	2500	2500	4500	8.5	5.0	3.0	37	21
300	70	76	24	3.0	PH531_0050KX501_0020 MF EZ502U	290	290	650	10.00	10/1	2500	2500	4500	11	5.0	3.0	37	20
300	70	78	24	3.0	PH531_0050KX501_0020 MF EZ701U	190	190	650	10.00	10/1	2500	2500	4500	14	5.0	3.0	37	22
300	92	105	31	2.3	PH531_0050KX501_0020 MF EZ503U	300	300	650	10.00	10/1	2500	2500	4500	13	5.0	3.0	37	22
300	113	136	39	1.8	PH531_0050KX501_0020 MF EZ702U	300	300	650	10.00	10/1	2500	2500	4500	19	5.0	3.0	37	24
300	128	151	43	1.6	PH531_0050KX501_0020 MF EZ505U	300	300	650	10.00	10/1	2500	2500	4500	18	5.0	3.0	37	24
300	156	197	53	1.3	PH531_0050KX501_0020 MF EZ703U	300	300	650	10.00	10/1	2500	2500	4500	27	5.0	3.0	37	26
375	36	39	15	4.7	PH531_0040KX501_0020 MF EZ402U	120	120	520	8.000	8/1	2500	2500	4500	7.3	5.5	3.5	28	19
375	52	65	22	3.2	PH531_0040KX501_0020 MF EZ404U	220	220	520	8.000	8/1	2500	2500	4500	8.7	5.5	3.5	28	21
375	56	61	24	3.0	PH531_0040KX501_0020 MF EZ502U	230	230	520	8.000	8/1	2500	2500	4500	11	5.5	3.5	28	20
375	56	63	24	3.0	PH531_0040KX501_0020 MF EZ701U	150	150	520	8.000	8/1	2500	2500	4500	14	5.5	3.5	28	22
375	73	84	31	2.3	PH531_0040KX501_0020 MF EZ503U	240	240	520	8.000	8/1	2500	2500	4500	13	5.5	3.5	28	22
375	91	109	39	1.8	PH531_0040KX501_0020 MF EZ702U	240	240	520	8.000	8/1	2500	2500	4500	19	5.5	3.5	28	24
375	102	121	43	1.6	PH531_0040KX501_0020 MF EZ505U	240	240	520	8.000	8/1	2500	2500	4500	18	5.5	3.5	28	24
375	125	157	53	1.3	PH531_0040KX501_0020 MF EZ703U	240	240	520	8.000	8/1	2500	2500	4500	27	5.5	3.5	28	26
429	46	57	30	4.0	PH531_0070KX501_0010 MF EZ404U	190	190	710	7.000	7/1	2500	2000	3500	11	4.5	2.5	46	21
429	49	53	32	3.7	PH531_0070KX501_0010 MF EZ502U	210	210	710	7.000	7/1	2500	2000	3500	13	4.5	2.5	46	20
429	49	55	32	3.7	PH531_0070KX501_0010 MF EZ701U	130	130	710	7.000	7/1	2500	2000	3500	17	4.5	2.5	46	22
429	64	73	42	2.9	PH531_0070KX501_0010 MF EZ503U	280	280	710	7.000	7/1	2500	2000	3500	16	4.5	2.5	46	22
429	79	95	52	2.3	PH531_0070KX501_0010 MF EZ702U	270	270	710	7.000	7/1	2500	2000	3500	22	4.5	2.5	46	24
429	89	106	58	2.1	PH531_0070KX501_0010 MF EZ505U	370	390	710	7.000	7/1	2500	2000	3500	20	4.5	2.5	46	24
429	109	138	71	1.7	PH531_0070KX501_0010 MF EZ703U	370	390	710	7.000	7/1	2500	2000	3500	30	4.5	2.5	46	26
429	141	200	92	1.3	PH531_0070KX501_0010 MF EZ705U	370	390	710	7.000	7/1	2500	2000	3500	42	4.5	2.5	46	32
600	46	52	30	4.0	PH531_0050KX501_0010 MF EZ503U	200	200	650	5.000	5/1	2500	2000	3500	16	5.0	3.0	37	22
600	57	68	37	3.2	PH531_0050KX501_0010 MF EZ702U	190	190	650	5.000	5/1	2500	2000	3500	22	5.0	3.0	37	24
600	64	76	42	2.9	PH531_0050KX501_0010 MF EZ505U	300	300	650	5.000	5/1	2500	2000	3500	21	5.0	3.0	37	24
600	78	98	51	2.4	PH531_0050KX501_0010 MF EZ703U	300	300	650	5.000	5/1	2500	2000	3500	30	5.0	3.0	37	26
600	101	143	66	1.8	PH531_0050KX501_0010 MF EZ705U	300	300	650	5.000	5/1	2500	2000	3500	42	5.0	3.0	37	32
750	37	42	26	4.6	PH531_0040KX501_0010 MF EZ503U	160	160	520	4.000	4/1	2500	2000	3500	17	5.5	3.5	28	22
750	45	54	32	3.7	PH531_0040KX501_0010 MF EZ702U	160	160	520	4.000	4/1	2500	2000	3500	23	5.5	3.5	28	24
750	51	61	37	3.3	PH531_0040KX501_0010 MF EZ505U	240	240	520	4.000	4/1	2500	2000	3500	21	5.5	3.5	28	24
750	62	79	45	2.7	PH531_0040KX501_0010 MF EZ703U	240	240	520	4.000	4/1	2500	2000	3500	31	5.5	3.5	28	26
750	81	114	58	2.1	PH531_0040KX501_0010 MF EZ705U	240	240	520	4.000	4/1	2500	2000	3500	43	5.5	3.5	28	32
PH531KX (n_{1N} = 4500 rpm, $M_{2acc,max}$ = 370 Nm)																		
300	135	217	39	1.4	PH531_0050KX501_0030 MF EZ505U	300	300	650	15.00	15/1	3000	3000	5000	17	5.0	3.0	37	24
321	126	203	44	1.6	PH531_0070KX501_0020 MF EZ505U	370	390	710	14.00	14/1	2500	2500	4500	18	4.5	2.5	46	24
321	160	265	57	1.3	PH531_0070KX501_0020 MF EZ703U	370	390	710	14.00	14/1	2500	2500	4500	27	4.5	2.5	46	26
375	108	174	39	1.4	PH531_0040KX501_0030 MF EZ505U	240	240	520	12.00	12/1	3000	3000	5000	17	5.5	3.5	28	24
450	90	145	35	2.0	PH531_0050KX501_0020 MF EZ505U	300	300	650	10.00	10/1	2500	2500	4500	18	5.0	3.0	37	24
450	114	189	45	1.6	PH531_0050KX501_0020 MF EZ703U	300	300	650	10.00	10/1	2500	2500	4500	27	5.0	3.0	37	26
563	72	116	35	2.0	PH531_0040KX501_0020 MF EZ505U	240	240	520	8.000	8/1	2500	2500	4500	18	5.5	3.5	28	24
563	92	151	45	1.6	PH531_0040KX501_0020 MF EZ703U	240	240	520	8.000	8/1	2500	2500	4500	27	5.5	3.5	28	26
PH532KX (n_{1N} = 3000 rpm, $M_{2acc,max}$ = 390 Nm)																		
14	179	183	30	1.6	PH532_0700KX401_0030 MF EZ301U	370	390	710	210.0	210/1	3000	3000	5500	1.6	3.0	1.0	69	13
15	170	174	49	1.3	PH532_1000KX401_0020 MF EZ301U	290	290	580	200.0	200/1	2500	2500	5000	1.8	3.0	1.0	52	13
20	128	131	20	2.3	PH532_0500KX401_0030 MF EZ301U	380	380	710	150.0	150/1	3000	3000	5500	1.6	3.0	1.0	77	13
20	218	231	35	1.4	PH532_0500KX401_0030 MF EZ302U	390	400	710	150.0	150/1	3000	3000	5500	1.7	3.0	1.0	77	14
21	119	122	27	2.4	PH532_0700KX401_0020 MF EZ301U	360	360	710	140.0	140/1	2500	2500	5000	1.8	3.0	1.0	69	13
21	204	215	46	1.4	PH532_0700KX401_0020 MF EZ302U	370	390	710	140.0	140/1	2500	2500	5000	1.9	3.0	1.0	69	14
21	265	281	60	1.1	PH532_0700KX401_0020 MF EZ303U	370	390	710	140.0	140/1	2500	2500	5000	2.0	3.0	1.0	69	14
25	102	104	19	2.5	PH532_0400KX401_0030 MF EZ301U	310	310	700	120.0	120/1	3000	3000	5500	1.7	3.5	1.5	71	13
25	175	185	32	1.5	PH532_0400KX401_0030 MF EZ302U	360	360	700	120.0	120/1	3000	3000	5500	1.8	3.5	1.5	71	14
25	228	241	41	1.1	PH532_0400KX401_0030 MF EZ303U	360	360	700	120.0	120/1	3000	3000	5500	1.9	3.5	1.5	71	14
29	89	91	15	3.2	PH532_0350KX401_0030 MF EZ301U	270	270	710	105.0	105/1	3000	3000	5500	1.6	3.5	1.5	78	13

n_{2N} [rpm]	M_{2N} [Nm]	$M_{2,0}$ [Nm]	a_{th}	S	Type	M_{2acc} [Nm]	M_{2accHT} [Nm]	M_{2NOT} [Nm]	i	i_{exakt}	n_{1maxDB} EL1,2,5,6 [rpm]	n_{1maxDB} EL3,4 [rpm]	n_{1maxZB} [rpm]	J_1 [kgcm²]	$\Delta\varphi_2$ [arcmin]	$\Delta\varphi_{2red}$ [arcmin]	C_2 [Nm/arcmin]	m [kg]
PH532KX (n_{1N} = 3000 rpm, $M_{2acc,max}$ = 390 Nm)																		
29	153	162	25	1.9	PH532_0350KX401_0030 MF EZ302U	390	400	710	105.0	105/1	3000	3000	5500	1.7	3.5	1.5	78	14
29	199	211	33	1.5	PH532_0350KX401_0030 MF EZ303U	390	400	710	105.0	105/1	3000	3000	5500	1.9	3.5	1.5	78	14
29	269	289	44	1.1	PH532_0350KX401_0030 MF EZ401U	390	400	710	105.0	105/1	3000	3000	5500	2.4	3.5	1.5	78	16
30	85	87	18	3.5	PH532_0500KX401_0020 MF EZ301U	260	260	710	100.0	100/1	2500	2500	5000	1.9	3.0	1.0	77	13
30	146	154	32	2.0	PH532_0500KX401_0020 MF EZ302U	390	400	710	100.0	100/1	2500	2500	5000	2.0	3.0	1.0	77	14
30	190	201	41	1.6	PH532_0500KX401_0020 MF EZ303U	390	400	710	100.0	100/1	2500	2500	5000	2.1	3.0	1.0	77	14
30	256	275	56	1.2	PH532_0500KX401_0020 MF EZ401U	390	400	710	100.0	100/1	2500	2500	5000	2.6	3.0	1.0	77	16
36	72	73	14	3.4	PH532_0280KX401_0030 MF EZ301U	220	220	700	84.00	84/1	3000	3000	5500	1.7	3.5	1.5	72	13
36	122	129	24	2.0	PH532_0280KX401_0030 MF EZ302U	360	380	700	84.00	84/1	3000	3000	5500	1.8	3.5	1.5	72	14
36	159	169	31	1.5	PH532_0280KX401_0030 MF EZ303U	360	390	700	84.00	84/1	3000	3000	5500	1.9	3.5	1.5	72	14
36	215	231	43	1.1	PH532_0280KX401_0030 MF EZ401U	360	390	700	84.00	84/1	3000	3000	5500	2.4	3.5	1.5	72	16
38	68	70	17	3.8	PH532_0400KX401_0020 MF EZ301U	210	210	700	80.00	80/1	2500	2500	5000	1.9	3.5	1.5	71	13
38	117	123	29	2.2	PH532_0400KX401_0020 MF EZ302U	360	360	700	80.00	80/1	2500	2500	5000	2.0	3.5	1.5	71	14
38	152	160	37	1.7	PH532_0400KX401_0020 MF EZ303U	360	360	700	80.00	80/1	2500	2500	5000	2.1	3.5	1.5	71	14
38	205	220	51	1.3	PH532_0400KX401_0020 MF EZ401U	360	360	700	80.00	80/1	2500	2500	5000	2.6	3.5	1.5	71	16
40	64	65	12	4.1	PH532_0250KX401_0030 MF EZ301U	190	190	710	75.00	75/1	3000	3000	5500	1.6	3.5	1.5	75	13
40	109	115	20	2.4	PH532_0250KX401_0030 MF EZ302U	340	340	710	75.00	75/1	3000	3000	5500	1.7	3.5	1.5	75	14
40	142	150	26	1.8	PH532_0250KX401_0030 MF EZ303U	390	400	710	75.00	75/1	3000	3000	5500	1.9	3.5	1.5	75	14
40	192	206	35	1.4	PH532_0250KX401_0030 MF EZ401U	390	400	710	75.00	75/1	3000	3000	5500	2.4	3.5	1.5	75	16
43	60	61	13	4.9	PH532_0350KX401_0020 MF EZ301U	180	180	710	70.00	70/1	2500	2500	5000	1.9	3.5	1.5	78	13
43	102	108	23	2.8	PH532_0350KX401_0020 MF EZ302U	320	320	710	70.00	70/1	2500	2500	5000	2.0	3.5	1.5	78	14
43	133	140	29	2.2	PH532_0350KX401_0020 MF EZ303U	390	400	710	70.00	70/1	2500	2500	5000	2.1	3.5	1.5	78	14
43	180	192	40	1.6	PH532_0350KX401_0020 MF EZ401U	390	400	710	70.00	70/1	2500	2500	5000	2.6	3.5	1.5	78	16
50	51	52	9.7	4.9	PH532_0200KX401_0030 MF EZ301U	150	150	710	60.00	60/1	3000	3000	5500	1.6	3.5	1.5	71	13
50	87	92	17	2.9	PH532_0200KX401_0030 MF EZ302U	270	270	710	60.00	60/1	3000	3000	5500	1.7	3.5	1.5	71	14
50	114	120	22	2.2	PH532_0200KX401_0030 MF EZ303U	370	380	710	60.00	60/1	3000	3000	5500	1.9	3.5	1.5	71	14
50	154	165	29	1.6	PH532_0200KX401_0030 MF EZ401U	370	390	710	60.00	60/1	3000	3000	5500	2.4	3.5	1.5	71	16
50	236	258	45	1.1	PH532_0200KX401_0030 MF EZ501U	370	390	710	60.00	60/1	3000	3000	5500	4.4	3.5	1.5	71	17
54	82	86	22	2.9	PH532_0280KX401_0020 MF EZ302U	260	260	700	56.00	56/1	2500	2500	5000	2.0	3.5	1.5	72	14
54	106	112	28	2.3	PH532_0280KX401_0020 MF EZ303U	360	360	700	56.00	56/1	2500	2500	5000	2.1	3.5	1.5	72	14
54	144	154	38	1.7	PH532_0280KX401_0020 MF EZ401U	360	390	700	56.00	56/1	2500	2500	5000	2.6	3.5	1.5	72	16
54	221	241	59	1.1	PH532_0280KX401_0020 MF EZ501U	360	390	700	56.00	56/1	2500	2500	5000	4.6	3.5	1.5	72	17
60	73	77	18	3.6	PH532_0250KX401_0020 MF EZ302U	230	230	710	50.00	50/1	2500	2500	5000	2.0	3.5	1.5	75	14
60	95	100	23	2.7	PH532_0250KX401_0020 MF EZ303U	320	320	710	50.00	50/1	2500	2500	5000	2.1	3.5	1.5	75	14
60	128	137	32	2.0	PH532_0250KX401_0020 MF EZ401U	390	390	710	50.00	50/1	2500	2500	5000	2.6	3.5	1.5	75	16
60	197	215	49	1.3	PH532_0250KX401_0020 MF EZ501U	390	400	710	50.00	50/1	2500	2500	5000	4.6	3.5	1.5	75	17
60	215	238	53	1.2	PH532_0250KX401_0020 MF EZ402U	390	400	710	50.00	50/1	2500	2500	5000	3.3	3.5	1.5	75	17
63	70	74	14	3.3	PH532_0160KX401_0030 MF EZ302U	220	220	700	48.00	48/1	3000	3000	5500	1.8	3.5	1.5	63	14
63	91	96	19	2.5	PH532_0160KX401_0030 MF EZ303U	310	310	700	48.00	48/1	3000	3000	5500	1.9	3.5	1.5	63	14
63	123	132	25	1.9	PH532_0160KX401_0030 MF EZ401U	360	360	700	48.00	48/1	3000	3000	5500	2.4	3.5	1.5	63	16
63	189	207	39	1.2	PH532_0160KX401_0030 MF EZ501U	360	360	700	48.00	48/1	3000	3000	5500	4.4	3.5	1.5	63	17
63	207	229	43	1.1	PH532_0160KX401_0030 MF EZ402U	360	360	700	48.00	48/1	3000	3000	5500	3.1	3.5	1.5	63	17
75	58	62	15	4.3	PH532_0200KX401_0020 MF EZ302U	180	180	710	40.00	40/1	2500	2500	5000	2.0	3.5	1.5	71	14
75	76	80	19	3.3	PH532_0200KX401_0020 MF EZ303U	260	260	710	40.00	40/1	2500	2500	5000	2.1	3.5	1.5	71	14
75	103	110	26	2.4	PH532_0200KX401_0020 MF EZ401U	310	310	710	40.00	40/1	2500	2500	5000	2.6	3.5	1.5	71	16
75	158	172	40	1.6	PH532_0200KX401_0020 MF EZ501U	370	390	710	40.00	40/1	2500	2500	5000	4.6	3.5	1.5	71	17
75	172	191	44	1.5	PH532_0200KX401_0020 MF EZ402U	370	390	710	40.00	40/1	2500	2500	5000	3.3	3.5	1.5	71	17
86	66	70	27	4.0	PH532_0350KX401_0010 MF EZ303U	220	220	710	35.00	35/1	2500	2000	4000	3.0	3.5	1.5	78	14
86	90	96	37	2.9	PH532_0350KX401_0010 MF EZ401U	270	270	710	35.00	35/1	2500	2000	4000	3.5	3.5	1.5	78	16
86	138	151	56	1.9	PH532_0350KX401_0010 MF EZ501U	390	400	710	35.00	35/1	2500	2000	4000	5.5	3.5	1.5	78	17
86	151	167	62	1.8	PH532_0350KX401_0010 MF EZ402U	390	400	710	35.00	35/1	2500	2000	4000	4.2	3.5	1.5	78	17
86	221	276	90	1.2	PH532_0350KX401_0010 MF EZ404U	390	400	710	35.00	35/1	2500	2000	4000	5.5	3.5	1.5	78	19
86	237	256	97	1.1	PH532_0350KX401_0010 MF EZ502U	390	400	710	35.00	35/1	2500	2000	4000	7.8	3.5	1.5	78	18
86	237	266	97	1.1	PH532_0350KX401_0010 MF EZ701U	390	400	710	35.00	35/1	2500	2000	4000	11	3.5	1.5	78	20
94	47	49	13	4.9	PH532_0160KX401_0020 MF EZ302U	150	150	700	32.00	32/1	2500	2500	5000	2.0	3.5	1.5	63	14
94	61	64	17	3.8	PH532_0160KX401_0020 MF EZ303U	210	210	700	32.00	32/1	2500	2500	5000	2.1	3.5	1.5	63	14
94	82	88	23	2.8	PH532_0160KX401_0020 MF EZ401U	250	250	700	32.00	32/1	2500	2500	5000	2.6	3.5	1.5	63	16
94	126	138	35	1.8	PH532_0160KX401_0020 MF EZ501U	360	360	700	32.00	32/1	2500	2500	5000	4.6	3.5	1.5	63	17
94	138	152	38	1.7	PH532_0160KX401_0020 MF EZ402U	360	360	700	32.00	32/1	2500	2500	5000	3.3	3.5	1.5	63	17
94	202	252	56	1.1	PH532_0160KX401_0020 MF EZ404U	360	360	700	32.00	32/1	2500	2500	5000	4.7	3.5	1.5	63	19
94	217	235	61	1.1	PH532_0160KX401_0020 MF EZ502U	360	360	700	32.00	32/1	2500	2500	5000	6.9	3.5	1.5	63	18
94	217	243	61	1.1	PH532_0160KX401_0020 MF EZ701U	360	360	700	32.00	32/1	2500	2500	5000	10	3.5	1.5	63	20

n_{2N} [rpm]	M_{2N} [Nm]	$M_{2,0}$ [Nm]	a_{th}	S	Type	M_{2acc} [Nm]	M_{2accHT} [Nm]	M_{2NOT} [Nm]	i	i_{exakt}	n_{1maxDB} EL1,2,5,6 [rpm]	n_{1maxDB} EL3,4 [rpm]	n_{1maxZB} [rpm]	J_1 [kgcm²]	$\Delta\varphi_2$ [arcmin]	$\Delta\varphi_{2red}$ [arcmin]	C_2 [Nm/ arcmin]	m [kg]
PH731KX (n_{1N} = 2000 rpm, $M_{2acc,max}$ = 840 Nm)																		
286	289	438	237	1.5	PH731_0070KX701_0010 MF EZ805U	840	840	1600	7.000	7/1	1800	1600	3000	159	4.5	2.5	122	71
400	207	313	169	2.1	PH731_0050KX701_0010 MF EZ805U	600	600	1150	5.000	5/1	1800	1600	3000	161	5.0	3.0	111	71
500	165	250	155	2.3	PH731_0040KX701_0010 MF EZ805U	480	480	920	4.000	4/1	1800	1600	3000	163	5.5	3.5	94	71
PH731KX (n_{1N} = 3000 rpm, $M_{2acc,max}$ = 840 Nm)																		
100	122	133	55	2.9	PH731_0100KX701_0030 MF EZ501U	450	450	1150	30.00	30/1	2100	2100	4000	15	4.0	2.0	110	31
100	210	227	95	1.7	PH731_0100KX701_0030 MF EZ502U	580	580	1150	30.00	30/1	2100	2100	4000	18	4.0	2.0	110	32
100	210	235	95	1.7	PH731_0100KX701_0030 MF EZ701U	570	570	1150	30.00	30/1	2100	2100	4000	21	4.0	2.0	110	34
100	275	315	124	1.3	PH731_0100KX701_0030 MF EZ503U	580	580	1150	30.00	30/1	2100	2100	4000	20	4.0	2.0	110	34
100	340	408	154	1.0	PH731_0100KX701_0030 MF EZ702U	580	580	1150	30.00	30/1	2100	2100	4000	26	4.0	2.0	110	36
143	147	159	53	3.0	PH731_0070KX701_0030 MF EZ502U	620	620	1720	21.00	21/1	2100	2100	4000	18	4.5	2.5	122	32
143	147	165	53	3.0	PH731_0070KX701_0030 MF EZ701U	400	400	1720	21.00	21/1	2100	2100	4000	21	4.5	2.5	122	34
143	193	220	69	2.3	PH731_0070KX701_0030 MF EZ503U	840	840	1720	21.00	21/1	2100	2100	4000	20	4.5	2.5	122	34
143	238	286	86	1.8	PH731_0070KX701_0030 MF EZ702U	810	810	1720	21.00	21/1	2100	2100	4000	26	4.5	2.5	122	36
143	268	318	96	1.6	PH731_0070KX701_0030 MF EZ505U	840	840	1720	21.00	21/1	2100	2100	4000	25	4.5	2.5	122	36
143	328	413	118	1.3	PH731_0070KX701_0030 MF EZ703U	840	840	1720	21.00	21/1	2100	2100	4000	34	4.5	2.5	122	38
143	423	600	152	1.0	PH731_0070KX701_0030 MF EZ705U	840	840	1720	21.00	21/1	2100	2100	4000	47	4.5	2.5	122	44
150	81	89	50	4.3	PH731_0100KX701_0020 MF EZ501U	300	300	1150	20.00	20/1	1800	1800	3500	18	4.0	2.0	110	31
150	140	151	86	2.5	PH731_0100KX701_0020 MF EZ502U	580	580	1150	20.00	20/1	1800	1800	3500	20	4.0	2.0	110	32
150	140	157	86	2.5	PH731_0100KX701_0020 MF EZ701U	380	380	1150	20.00	20/1	1800	1800	3500	23	4.0	2.0	110	34
150	183	210	112	1.9	PH731_0100KX701_0020 MF EZ503U	580	580	1150	20.00	20/1	1800	1800	3500	23	4.0	2.0	110	34
150	227	272	139	1.5	PH731_0100KX701_0020 MF EZ702U	580	580	1150	20.00	20/1	1800	1800	3500	29	4.0	2.0	110	36
150	255	303	156	1.4	PH731_0100KX701_0020 MF EZ505U	580	580	1150	20.00	20/1	1800	1800	3500	27	4.0	2.0	110	36
150	312	393	191	1.1	PH731_0100KX701_0020 MF EZ703U	580	580	1150	20.00	20/1	1800	1800	3500	37	4.0	2.0	110	38
200	105	113	40	4.0	PH731_0050KX701_0030 MF EZ502U	440	440	1300	15.00	15/1	2100	2100	4000	18	5.0	3.0	111	32
200	105	118	40	4.0	PH731_0050KX701_0030 MF EZ701U	280	280	1300	15.00	15/1	2100	2100	4000	21	5.0	3.0	111	34
200	138	157	52	3.0	PH731_0050KX701_0030 MF EZ503U	600	600	1300	15.00	15/1	2100	2100	4000	20	5.0	3.0	111	34
200	170	204	64	2.5	PH731_0050KX701_0030 MF EZ702U	580	580	1300	15.00	15/1	2100	2100	4000	26	5.0	3.0	111	36
200	191	227	72	2.2	PH731_0050KX701_0030 MF EZ505U	600	600	1300	15.00	15/1	2100	2100	4000	25	5.0	3.0	111	36
200	234	295	88	1.8	PH731_0050KX701_0030 MF EZ703U	600	600	1300	15.00	15/1	2100	2100	4000	34	5.0	3.0	111	38
200	302	428	114	1.4	PH731_0050KX701_0030 MF EZ705U	600	600	1300	15.00	15/1	2100	2100	4000	47	5.0	3.0	111	44
214	98	106	48	4.5	PH731_0070KX701_0020 MF EZ502U	410	410	1720	14.00	14/1	1800	1800	3500	20	4.5	2.5	122	32
214	98	110	48	4.5	PH731_0070KX701_0020 MF EZ701U	260	260	1720	14.00	14/1	1800	1800	3500	24	4.5	2.5	122	34
214	128	147	62	3.4	PH731_0070KX701_0020 MF EZ503U	570	570	1720	14.00	14/1	1800	1800	3500	23	4.5	2.5	122	34
214	159	191	77	2.8	PH731_0070KX701_0020 MF EZ702U	540	540	1720	14.00	14/1	1800	1800	3500	29	4.5	2.5	122	36
214	179	212	87	2.5	PH731_0070KX701_0020 MF EZ505U	840	840	1720	14.00	14/1	1800	1800	3500	27	4.5	2.5	122	36
214	218	275	106	2.0	PH731_0070KX701_0020 MF EZ703U	840	840	1720	14.00	14/1	1800	1800	3500	37	4.5	2.5	122	38
214	282	400	137	1.6	PH731_0070KX701_0020 MF EZ705U	840	840	1720	14.00	14/1	1800	1800	3500	49	4.5	2.5	122	44
214	295	491	144	1.5	PH731_0070KX701_0020 MF EZ802U	840	840	1720	14.00	14/1	1800	1800	3500	73	4.5	2.5	122	52
214	352	638	171	1.2	PH731_0070KX701_0020 MF EZ803U	840	840	1720	14.00	14/1	1800	1800	3500	99	4.5	2.5	122	58
250	84	91	40	4.0	PH731_0040KX701_0030 MF EZ502U	350	350	1040	12.00	12/1	2100	2100	4000	18	5.5	3.5	94	32
250	84	94	40	4.0	PH731_0040KX701_0030 MF EZ701U	230	230	1040	12.00	12/1	2100	2100	4000	22	5.5	3.5	94	34
250	110	126	52	3.0	PH731_0040KX701_0030 MF EZ503U	480	480	1040	12.00	12/1	2100	2100	4000	21	5.5	3.5	94	34
250	136	163	64	2.5	PH731_0040KX701_0030 MF EZ702U	470	470	1040	12.00	12/1	2100	2100	4000	27	5.5	3.5	94	36
250	153	182	72	2.2	PH731_0040KX701_0030 MF EZ505U	480	480	1040	12.00	12/1	2100	2100	4000	25	5.5	3.5	94	36
250	187	236	88	1.8	PH731_0040KX701_0030 MF EZ703U	480	480	1040	12.00	12/1	2100	2100	4000	35	5.5	3.5	94	38
250	242	343	114	1.4	PH731_0040KX701_0030 MF EZ705U	480	480	1040	12.00	12/1	2100	2100	4000	47	5.5	3.5	94	44
300	92	105	47	4.6	PH731_0050KX701_0020 MF EZ503U	410	410	1300	10.00	10/1	1800	1800	3500	23	5.0	3.0	111	34
300	113	136	58	3.7	PH731_0050KX701_0020 MF EZ702U	390	390	1300	10.00	10/1	1800	1800	3500	29	5.0	3.0	111	36
300	128	151	65	3.3	PH731_0050KX701_0020 MF EZ505U	600	600	1300	10.00	10/1	1800	1800	3500	28	5.0	3.0	111	36
300	156	197	80	2.7	PH731_0050KX701_0020 MF EZ703U	600	600	1300	10.00	10/1	1800	1800	3500	37	5.0	3.0	111	38
300	201	286	103	2.1	PH731_0050KX701_0020 MF EZ705U	600	600	1300	10.00	10/1	1800	1800	3500	49	5.0	3.0	111	44
300	211	351	108	2.0	PH731_0050KX701_0020 MF EZ802U	600	600	1300	10.00	10/1	1800	1800	3500	74	5.0	3.0	111	52
300	252	456	128	1.7	PH731_0050KX701_0020 MF EZ803U	600	600	1300	10.00	10/1	1800	1800	3500	99	5.0	3.0	111	58
375	73	84	47	4.6	PH731_0040KX701_0020 MF EZ503U	330	330	1040	8.000	8/1	1800	1800	3500	24	5.5	3.5	94	34
375	91	109	58	3.7	PH731_0040KX701_0020 MF EZ702U	310	310	1040	8.000	8/1	1800	1800	3500	30	5.5	3.5	94	36
375	102	121	65	3.3	PH731_0040KX701_0020 MF EZ505U	480	480	1040	8.000	8/1	1800	1800	3500	28	5.5	3.5	94	36
375	125	157	80	2.7	PH731_0040KX701_0020 MF EZ703U	480	480	1040	8.000	8/1	1800	1800	3500	38	5.5	3.5	94	38
375	161	228	103	2.1	PH731_0040KX701_0020 MF EZ705U	480	480	1040	8.000	8/1	1800	1800	3500	50	5.5	3.5	94	44
375	169	281	108	2.0	PH731_0040KX701_0020 MF EZ802U	480	480	1040	8.000	8/1	1800	1800	3500	74	5.5	3.5	94	52
375	201	365	128	1.7	PH731_0040KX701_0020 MF EZ803U	480	480	1040	8.000	8/1	1800	1800	3500	99	5.5	3.5	94	58
429	79	95	74	4.8	PH731_0070KX701_0010 MF EZ702U	270	270	1600	7.000	7/1	1800	1600	3000	40	4.5	2.5	122	36
429	89	106	84	4.3	PH731_0070KX701_0010 MF EZ505U	440	440	1600	7.000	7/1	1800	1600	3000	39	4.5	2.5	122	36
429	109	138	102	3.5	PH731_0070KX701_0010 MF EZ703U	430	430	1600	7.000	7/1	1800	1600	3000	48	4.5	2.5	122	38
429	141	200	132	2.7	PH731_0070KX701_0010 MF EZ705U	690	690	1600	7.000	7/1	1800	1600	3000	60	4.5	2.5	122	44

n_{2N} [rpm]	M_{2N} [Nm]	$M_{2,0}$ [Nm]	a_{th}	S	Type	M_{2acc} [Nm]	M_{2accHT} [Nm]	M_{2NOT} [Nm]	i	i_{exakt}	n_{1maxDB} EL1,2,5,6 [rpm]	n_{1maxDB} EL3,4 [rpm]	n_{1maxZB} [rpm]	J_1 [kgcm²]	$\Delta\varphi_2$ [arcmin]	$\Delta\varphi_{2red}$ [arcmin]	C_2 [Nm/ arcmin]	m [kg]
PH731KX (n_{1N} = 3000 rpm, $M_{2acc,max}$ = 840 Nm)																		
429	148	246	138	2.6	PH731_0070KX701_0010 MF EZ802U	660	660	1600	7.000	7/1	1800	1600	3000	85	4.5	2.5	122	52
429	176	319	165	2.2	PH731_0070KX701_0010 MF EZ803U	840	840	1600	7.000	7/1	1800	1600	3000	110	4.5	2.5	122	58
600	78	98	73	4.9	PH731_0050KX701_0010 MF EZ703U	310	310	1150	5.000	5/1	1800	1600	3000	50	5.0	3.0	111	38
600	101	143	94	3.8	PH731_0050KX701_0010 MF EZ705U	490	490	1150	5.000	5/1	1800	1600	3000	62	5.0	3.0	111	44
600	105	175	99	3.6	PH731_0050KX701_0010 MF EZ802U	470	470	1150	5.000	5/1	1800	1600	3000	86	5.0	3.0	111	52
600	126	228	118	3.1	PH731_0050KX701_0010 MF EZ803U	600	600	1150	5.000	5/1	1800	1600	3000	111	5.0	3.0	111	58
750	81	114	86	4.2	PH731_0040KX701_0010 MF EZ705U	390	390	920	4.000	4/1	1800	1600	3000	64	5.5	3.5	94	44
750	84	140	91	4.0	PH731_0040KX701_0010 MF EZ802U	380	380	920	4.000	4/1	1800	1600	3000	88	5.5	3.5	94	52
750	101	182	108	3.3	PH731_0040KX701_0010 MF EZ803U	480	480	920	4.000	4/1	1800	1600	3000	114	5.5	3.5	94	58
PH732KX (n_{1N} = 3000 rpm, $M_{2acc,max}$ = 870 Nm)																		
14	539	577	47	1.1	PH732_0700KX501_0030 MF EZ401U	810	850	1620	210.0	210/1	3000	3000	5000	5.7	3.0	1.0	152	26
20	385	412	34	1.6	PH732_0500KX501_0030 MF EZ401U	830	830	1660	150.0	150/1	3000	3000	5000	5.8	3.0	1.0	171	26
21	359	385	43	1.7	PH732_0700KX501_0020 MF EZ401U	810	850	1620	140.0	140/1	2500	2500	4500	6.3	3.0	1.0	152	26
21	551	603	66	1.1	PH732_0700KX501_0020 MF EZ501U	810	850	1620	140.0	140/1	2500	2500	4500	8.3	3.0	1.0	152	27
25	308	330	30	1.8	PH732_0400KX501_0030 MF EZ401U	770	770	1540	120.0	120/1	3000	3000	5000	5.8	3.5	1.5	174	26
25	473	517	46	1.1	PH732_0400KX501_0030 MF EZ501U	770	770	1540	120.0	120/1	3000	3000	5000	7.8	3.5	1.5	174	27
25	517	572	50	1.0	PH732_0400KX501_0030 MF EZ402U	770	770	1540	120.0	120/1	3000	3000	5000	6.5	3.5	1.5	174	27
29	269	289	26	2.0	PH732_0350KX501_0030 MF EZ401U	820	820	1720	105.0	105/1	3000	3000	5000	5.8	3.5	1.5	172	26
29	414	452	40	1.3	PH732_0350KX501_0030 MF EZ501U	870	910	1720	105.0	105/1	3000	3000	5000	7.8	3.5	1.5	172	27
29	452	500	44	1.2	PH732_0350KX501_0030 MF EZ402U	870	910	1720	105.0	105/1	3000	3000	5000	6.5	3.5	1.5	172	27
30	256	275	31	2.3	PH732_0500KX501_0020 MF EZ401U	780	780	1660	100.0	100/1	2500	2500	4500	6.4	3.0	1.0	171	26
30	394	431	47	1.5	PH732_0500KX501_0020 MF EZ501U	830	830	1660	100.0	100/1	2500	2500	4500	8.3	3.0	1.0	171	27
30	431	476	51	1.4	PH732_0500KX501_0020 MF EZ402U	830	830	1660	100.0	100/1	2500	2500	4500	7.1	3.0	1.0	171	27
36	215	231	21	2.5	PH732_0280KX501_0030 MF EZ401U	650	650	1540	84.00	84/1	3000	3000	5000	5.8	3.5	1.5	176	26
36	331	362	32	1.6	PH732_0280KX501_0030 MF EZ501U	770	880	1540	84.00	84/1	3000	3000	5000	7.8	3.5	1.5	176	27
36	362	400	35	1.5	PH732_0280KX501_0030 MF EZ402U	770	880	1540	84.00	84/1	3000	3000	5000	6.5	3.5	1.5	176	27
38	205	220	27	2.6	PH732_0400KX501_0020 MF EZ401U	620	620	1540	80.00	80/1	2500	2500	4500	6.5	3.5	1.5	174	26
38	315	344	42	1.7	PH732_0400KX501_0020 MF EZ501U	770	770	1540	80.00	80/1	2500	2500	4500	8.4	3.5	1.5	174	27
38	344	381	46	1.6	PH732_0400KX501_0020 MF EZ402U	770	770	1540	80.00	80/1	2500	2500	4500	7.2	3.5	1.5	174	27
40	192	206	20	2.6	PH732_0250KX501_0030 MF EZ401U	580	580	1720	75.00	75/1	3000	3000	5000	5.8	3.5	1.5	166	26
40	295	323	31	1.7	PH732_0250KX501_0030 MF EZ501U	870	910	1720	75.00	75/1	3000	3000	5000	7.8	3.5	1.5	166	27
40	323	357	34	1.5	PH732_0250KX501_0030 MF EZ402U	870	910	1720	75.00	75/1	3000	3000	5000	6.5	3.5	1.5	166	27
40	474	591	50	1.1	PH732_0250KX501_0030 MF EZ404U	870	910	1720	75.00	75/1	3000	3000	5000	7.8	3.5	1.5	166	29
43	180	192	24	3.0	PH732_0350KX501_0020 MF EZ401U	550	550	1720	70.00	70/1	2500	2500	4500	6.4	3.5	1.5	172	26
43	276	301	36	2.0	PH732_0350KX501_0020 MF EZ501U	870	910	1720	70.00	70/1	2500	2500	4500	8.3	3.5	1.5	172	27
43	301	333	40	1.8	PH732_0350KX501_0020 MF EZ402U	870	910	1720	70.00	70/1	2500	2500	4500	7.1	3.5	1.5	172	27
43	442	551	58	1.2	PH732_0350KX501_0020 MF EZ404U	870	910	1720	70.00	70/1	2500	2500	4500	8.4	3.5	1.5	172	29
43	475	513	63	1.1	PH732_0350KX501_0020 MF EZ502U	870	910	1720	70.00	70/1	2500	2500	4500	11	3.5	1.5	172	28
43	475	532	63	1.1	PH732_0350KX501_0020 MF EZ701U	870	910	1720	70.00	70/1	2500	2500	4500	14	3.5	1.5	172	30
50	154	165	18	3.0	PH732_0200KX501_0030 MF EZ401U	470	470	1610	60.00	60/1	3000	3000	5000	5.8	3.5	1.5	157	26
50	236	258	27	1.9	PH732_0200KX501_0030 MF EZ501U	810	840	1610	60.00	60/1	3000	3000	5000	7.8	3.5	1.5	157	27
50	258	286	30	1.8	PH732_0200KX501_0030 MF EZ402U	810	840	1610	60.00	60/1	3000	3000	5000	6.5	3.5	1.5	157	27
50	379	473	43	1.2	PH732_0200KX501_0030 MF EZ404U	810	840	1610	60.00	60/1	3000	3000	5000	7.9	3.5	1.5	157	29
50	407	440	47	1.1	PH732_0200KX501_0030 MF EZ502U	810	840	1610	60.00	60/1	3000	3000	5000	10	3.5	1.5	157	28
50	407	456	47	1.1	PH732_0200KX501_0030 MF EZ701U	810	840	1610	60.00	60/1	3000	3000	5000	13	3.5	1.5	157	30
54	144	154	19	3.8	PH732_0280KX501_0020 MF EZ401U	440	440	1540	56.00	56/1	2500	2500	4500	6.5	3.5	1.5	176	26
54	221	241	29	2.4	PH732_0280KX501_0020 MF EZ501U	770	820	1540	56.00	56/1	2500	2500	4500	8.4	3.5	1.5	176	27
54	241	267	32	2.2	PH732_0280KX501_0020 MF EZ402U	770	820	1540	56.00	56/1	2500	2500	4500	7.2	3.5	1.5	176	27
54	354	441	47	1.5	PH732_0280KX501_0020 MF EZ404U	770	880	1540	56.00	56/1	2500	2500	4500	8.5	3.5	1.5	176	29
54	380	410	50	1.4	PH732_0280KX501_0020 MF EZ502U	770	880	1540	56.00	56/1	2500	2500	4500	11	3.5	1.5	176	28
54	380	426	50	1.4	PH732_0280KX501_0020 MF EZ701U	770	880	1540	56.00	56/1	2500	2500	4500	14	3.5	1.5	176	30
54	498	569	66	1.1	PH732_0280KX501_0020 MF EZ503U	770	880	1540	56.00	56/1	2500	2500	4500	13	3.5	1.5	176	30
60	128	137	18	3.9	PH732_0250KX501_0020 MF EZ401U	390	390	1720	50.00	50/1	2500	2500	4500	6.4	3.5	1.5	166	26
60	197	215	28	2.5	PH732_0250KX501_0020 MF EZ501U	730	730	1720	50.00	50/1	2500	2500	4500	8.4	3.5	1.5	166	27
60	215	238	31	2.3	PH732_0250KX501_0020 MF EZ402U	730	730	1720	50.00	50/1	2500	2500	4500	7.1	3.5	1.5	166	27
60	316	394	45	1.6	PH732_0250KX501_0020 MF EZ404U	870	910	1720	50.00	50/1	2500	2500	4500	8.4	3.5	1.5	166	29
60	339	366	48	1.5	PH732_0250KX501_0020 MF EZ502U	870	910	1720	50.00	50/1	2500	2500	4500	11	3.5	1.5	166	28
60	339	380	48	1.5	PH732_0250KX501_0020 MF EZ701U	870	910	1720	50.00	50/1	2500	2500	4500	14	3.5	1.5	166	30
60	444	508	63	1.1	PH732_0250KX501_0020 MF EZ503U	870	910	1720	50.00	50/1	2500	2500	4500	13	3.5	1.5	166	30
63	123	132	14	3.7	PH732_0160KX501_0030 MF EZ401U	370	370	1480	48.00	48/1	3000	3000	5000	5.8	3.5	1.5	152	26
63	189	207	22	2.4	PH732_0160KX501_0030 MF EZ501U	700	700	1480	48.00	48/1	3000	3000	5000	7.8	3.5	1.5	152	27
63	207	229	24	2.2	PH732_0160KX501_0030 MF EZ402U	700	700	1480	48.00	48/1	3000	3000	5000	6.5	3.5	1.5	152	27
63	303	378	35	1.5	PH732_0160KX501_0030 MF EZ404U	740	740	1480	48.00	48/1	3000	3000	5000	7.9	3.5	1.5	152	29
63	325	352	38	1.4	PH732_0160KX501_0030 MF EZ502U	740	740	1480	48.00	48/1	3000	3000	5000	10	3.5	1.5	152	28

n_{2N} [rpm]	M_{2N} [Nm]	$M_{2,0}$ [Nm]	a_{th}	S	Type	M_{2acc} [Nm]	M_{2accHT} [Nm]	M_{2NOT} [Nm]	i	i_{exakt}	n_{1maxDB} EL1,2,5,6 [rpm]	n_{1maxDB} EL3,4 [rpm]	n_{1maxZB} [rpm]	J_1 [kgcm²]	$\Delta\varphi_2$ [arcmin]	$\Delta\varphi_{2red}$ [arcmin]	C_2 [Nm/ arcmin]	m [kg]
PH732KX (n_{1N} = 3000 rpm, $M_{2acc,max}$ = 870 Nm)																		
63	325	365	38	1.4	PH732_0160KX501_0030 MF EZ701U	740	740	1480	48.00	48/1	3000	3000	5000	13	3.5	1.5	152	30
63	427	488	50	1.1	PH732_0160KX501_0030 MF EZ503U	740	740	1480	48.00	48/1	3000	3000	5000	12	3.5	1.5	152	30
75	103	110	16	4.5	PH732_0200KX501_0020 MF EZ401U	310	310	1610	40.00	40/1	2500	2500	4500	6.4	3.5	1.5	157	26
75	158	172	24	2.9	PH732_0200KX501_0020 MF EZ501U	590	590	1610	40.00	40/1	2500	2500	4500	8.4	3.5	1.5	157	27
75	172	191	27	2.7	PH732_0200KX501_0020 MF EZ402U	590	590	1610	40.00	40/1	2500	2500	4500	7.1	3.5	1.5	157	27
75	253	315	39	1.8	PH732_0200KX501_0020 MF EZ404U	810	840	1610	40.00	40/1	2500	2500	4500	8.5	3.5	1.5	157	29
75	271	293	42	1.7	PH732_0200KX501_0020 MF EZ502U	810	840	1610	40.00	40/1	2500	2500	4500	11	3.5	1.5	157	28
75	271	304	42	1.7	PH732_0200KX501_0020 MF EZ701U	730	730	1610	40.00	40/1	2500	2500	4500	14	3.5	1.5	157	30
75	355	407	55	1.3	PH732_0200KX501_0020 MF EZ503U	810	840	1610	40.00	40/1	2500	2500	4500	13	3.5	1.5	157	30
75	440	528	68	1.0	PH732_0200KX501_0020 MF EZ702U	810	840	1610	40.00	40/1	2500	2500	4500	19	3.5	1.5	157	33
86	138	151	31	3.9	PH732_0350KX501_0010 MF EZ501U	510	510	1720	35.00	35/1	2500	2000	3500	11	3.5	1.5	172	27
86	151	167	33	3.6	PH732_0350KX501_0010 MF EZ402U	510	510	1720	35.00	35/1	2500	2000	3500	9.8	3.5	1.5	172	27
86	221	276	49	2.4	PH732_0350KX501_0010 MF EZ404U	870	910	1720	35.00	35/1	2500	2000	3500	11	3.5	1.5	172	29
86	237	256	53	2.3	PH732_0350KX501_0010 MF EZ502U	870	910	1720	35.00	35/1	2500	2000	3500	13	3.5	1.5	172	28
86	237	266	53	2.3	PH732_0350KX501_0010 MF EZ701U	640	640	1720	35.00	35/1	2500	2000	3500	17	3.5	1.5	172	30
86	311	356	69	1.7	PH732_0350KX501_0010 MF EZ503U	870	910	1720	35.00	35/1	2500	2000	3500	16	3.5	1.5	172	30
86	385	462	85	1.4	PH732_0350KX501_0010 MF EZ702U	870	910	1720	35.00	35/1	2500	2000	3500	22	3.5	1.5	172	33
86	433	513	96	1.2	PH732_0350KX501_0010 MF EZ505U	870	910	1720	35.00	35/1	2500	2000	3500	20	3.5	1.5	172	33
86	529	667	118	1.0	PH732_0350KX501_0010 MF EZ703U	870	910	1720	35.00	35/1	2500	2000	3500	30	3.5	1.5	172	35
94	126	138	20	3.6	PH732_0160KX501_0020 MF EZ501U	470	470	1480	32.00	32/1	2500	2500	4500	8.5	3.5	1.5	152	27
94	138	152	22	3.3	PH732_0160KX501_0020 MF EZ402U	470	470	1480	32.00	32/1	2500	2500	4500	7.2	3.5	1.5	152	27
94	202	252	32	2.2	PH732_0160KX501_0020 MF EZ404U	740	740	1480	32.00	32/1	2500	2500	4500	8.6	3.5	1.5	152	29
94	217	235	34	2.1	PH732_0160KX501_0020 MF EZ502U	740	740	1480	32.00	32/1	2500	2500	4500	11	3.5	1.5	152	28
94	217	243	34	2.1	PH732_0160KX501_0020 MF EZ701U	590	590	1480	32.00	32/1	2500	2500	4500	14	3.5	1.5	152	30
94	284	325	45	1.6	PH732_0160KX501_0020 MF EZ503U	740	740	1480	32.00	32/1	2500	2500	4500	13	3.5	1.5	152	30
94	352	422	56	1.3	PH732_0160KX501_0020 MF EZ702U	740	740	1480	32.00	32/1	2500	2500	4500	19	3.5	1.5	152	33
94	396	469	63	1.1	PH732_0160KX501_0020 MF EZ505U	740	740	1480	32.00	32/1	2500	2500	4500	18	3.5	1.5	152	33
PH732KX (n_{1N} = 4500 rpm, $M_{2acc,max}$ = 810 Nm)																		
113	348	561	54	1.3	PH732_0200KX501_0020 MF EZ505U	810	840	1610	40.00	40/1	2500	2500	4500	18	3.5	1.5	157	33
141	278	448	44	1.6	PH732_0160KX501_0020 MF EZ505U	740	740	1480	32.00	32/1	2500	2500	4500	18	3.5	1.5	152	33
PH831KX (n_{1N} = 2000 rpm, $M_{2acc,max}$ = 840 Nm)																		
286	289	438	155	2.3	PH831_0070KX701_0010 MF EZ805U	840	840	1600	7.000	7/1	1800	1600	3000	167	4.5	2.5	232	90
400	207	313	155	2.3	PH831_0050KX701_0010 MF EZ805U	600	600	1150	5.000	5/1	1800	1600	3000	174	5.0	3.0	170	90
500	165	250	155	2.3	PH831_0040KX701_0010 MF EZ805U	480	480	920	4.000	4/1	1800	1600	3000	185	5.5	3.5	122	90
PH831KX (n_{1N} = 3000 rpm, $M_{2acc,max}$ = 1200 Nm)																		
100	210	227	40	4.0	PH831_0100KX701_0030 MF EZ502U	880	880	2600	30.00	30/1	2100	2100	4000	18	4.0	2.0	253	50
100	210	235	40	4.0	PH831_0100KX701_0030 MF EZ701U	570	570	2600	30.00	30/1	2100	2100	4000	21	4.0	2.0	253	52
100	275	315	52	3.0	PH831_0100KX701_0030 MF EZ503U	1200	1200	2600	30.00	30/1	2100	2100	4000	20	4.0	2.0	253	52
100	340	408	64	2.5	PH831_0100KX701_0030 MF EZ702U	1160	1160	2600	30.00	30/1	2100	2100	4000	27	4.0	2.0	253	55
100	383	454	72	2.2	PH831_0100KX701_0030 MF EZ505U	1200	1200	2600	30.00	30/1	2100	2100	4000	25	4.0	2.0	253	55
100	468	590	88	1.8	PH831_0100KX701_0030 MF EZ703U	1200	1200	2600	30.00	30/1	2100	2100	4000	35	4.0	2.0	253	57
100	604	857	114	1.4	PH831_0100KX701_0030 MF EZ705U	1200	1200	2600	30.00	30/1	2100	2100	4000	47	4.0	2.0	253	62
143	147	159	40	4.0	PH831_0070KX701_0030 MF EZ502U	620	620	1820	21.00	21/1	2100	2100	4000	19	4.5	2.5	232	50
143	147	165	40	4.0	PH831_0070KX701_0030 MF EZ701U	400	400	1820	21.00	21/1	2100	2100	4000	22	4.5	2.5	232	52
143	193	220	52	3.0	PH831_0070KX701_0030 MF EZ503U	840	840	1820	21.00	21/1	2100	2100	4000	21	4.5	2.5	232	52
143	238	286	64	2.5	PH831_0070KX701_0030 MF EZ702U	810	810	1820	21.00	21/1	2100	2100	4000	27	4.5	2.5	232	55
143	268	318	72	2.2	PH831_0070KX701_0030 MF EZ505U	840	840	1820	21.00	21/1	2100	2100	4000	26	4.5	2.5	232	55
143	328	413	88	1.8	PH831_0070KX701_0030 MF EZ703U	840	840	1820	21.00	21/1	2100	2100	4000	35	4.5	2.5	232	57
143	423	600	114	1.4	PH831_0070KX701_0030 MF EZ705U	840	840	1820	21.00	21/1	2100	2100	4000	47	4.5	2.5	232	62
150	183	210	47	4.6	PH831_0100KX701_0020 MF EZ503U	810	810	2600	20.00	20/1	1800	1800	3500	23	4.0	2.0	253	52
150	227	272	58	3.7	PH831_0100KX701_0020 MF EZ702U	780	780	2600	20.00	20/1	1800	1800	3500	30	4.0	2.0	253	55
150	255	303	65	3.3	PH831_0100KX701_0020 MF EZ505U	1200	1200	2600	20.00	20/1	1800	1800	3500	28	4.0	2.0	253	55
150	312	393	80	2.7	PH831_0100KX701_0020 MF EZ703U	1200	1200	2600	20.00	20/1	1800	1800	3500	37	4.0	2.0	253	57
150	403	571	103	2.1	PH831_0100KX701_0020 MF EZ705U	1200	1200	2600	20.00	20/1	1800	1800	3500	50	4.0	2.0	253	62
150	422	702	108	2.0	PH831_0100KX701_0020 MF EZ802U	1200	1200	2600	20.00	20/1	1800	1800	3500	74	4.0	2.0	253	71
150	503	912	128	1.7	PH831_0100KX701_0020 MF EZ803U	1200	1200	2600	20.00	20/1	1800	1800	3500	99	4.0	2.0	253	77
200	105	113	40	4.0	PH831_0050KX701_0030 MF EZ502U	440	440	1300	15.00	15/1	2100	2100	4000	19	5.0	3.0	170	50
200	105	118	40	4.0	PH831_0050KX701_0030 MF EZ701U	280	280	1300	15.00	15/1	2100	2100	4000	23	5.0	3.0	170	52
200	138	157	52	3.0	PH831_0050KX701_0030 MF EZ503U	600	600	1300	15.00	15/1	2100	2100	4000	22	5.0	3.0	170	52
200	170	204	64	2.5	PH831_0050KX701_0030 MF EZ702U	580	580	1300	15.00	15/1	2100	2100	4000	28	5.0	3.0	170	55
200	191	227	72	2.2	PH831_0050KX701_0030 MF EZ505U	600	600	1300	15.00	15/1	2100	2100	4000	26	5.0	3.0	170	55
200	234	295	88	1.8	PH831_0050KX701_0030 MF EZ703U	600	600	1300	15.00	15/1	2100	2100	4000	36	5.0	3.0	170	57
200	302	428	114	1.4	PH831_0050KX701_0030 MF EZ705U	600	600	1300	15.00	15/1	2100	2100	4000	48	5.0	3.0	170	62

n_{2N} [rpm]	M_{2N} [Nm]	$M_{2,0}$ [Nm]	a_{th}	S	Type	M_{2acc} [Nm]	M_{2accHT} [Nm]	M_{2NOT} [Nm]	i	i_{exakt}	n_{1maxDB} EL1,2,5,6 [rpm]	n_{1maxDB} EL3,4 [rpm]	n_{1maxZB} [rpm]	J_1 [kgcm²]	$\Delta\varphi_2$ [arcmin]	$\Delta\varphi_{2red}$ [arcmin]	C_2 [Nm/arcmin]	m [kg]
PH831KX (n_{1N} = 3000 rpm, $M_{2acc,max}$ = 1200 Nm)																		
214	128	147	47	4.6	PH831_0070KX701_0020 MF EZ503U	570	570	1820	14.00	14/1	1800	1800	3500	25	4.5	2.5	232	52
214	159	191	58	3.7	PH831_0070KX701_0020 MF EZ702U	540	540	1820	14.00	14/1	1800	1800	3500	31	4.5	2.5	232	55
214	179	212	65	3.3	PH831_0070KX701_0020 MF EZ505U	840	840	1820	14.00	14/1	1800	1800	3500	29	4.5	2.5	232	55
214	218	275	80	2.7	PH831_0070KX701_0020 MF EZ703U	840	840	1820	14.00	14/1	1800	1800	3500	39	4.5	2.5	232	57
214	282	400	103	2.1	PH831_0070KX701_0020 MF EZ705U	840	840	1820	14.00	14/1	1800	1800	3500	51	4.5	2.5	232	62
214	295	491	108	2.0	PH831_0070KX701_0020 MF EZ802U	840	840	1820	14.00	14/1	1800	1800	3500	75	4.5	2.5	232	71
214	352	638	128	1.7	PH831_0070KX701_0020 MF EZ803U	840	840	1820	14.00	14/1	1800	1800	3500	100	4.5	2.5	232	77
250	84	91	40	4.0	PH831_0040KX701_0030 MF EZ502U	350	350	1040	12.00	12/1	2100	2100	4000	21	5.5	3.5	122	50
250	84	94	40	4.0	PH831_0040KX701_0030 MF EZ701U	230	230	1040	12.00	12/1	2100	2100	4000	24	5.5	3.5	122	52
250	110	126	52	3.0	PH831_0040KX701_0030 MF EZ503U	480	480	1040	12.00	12/1	2100	2100	4000	23	5.5	3.5	122	52
250	136	163	64	2.5	PH831_0040KX701_0030 MF EZ702U	470	470	1040	12.00	12/1	2100	2100	4000	29	5.5	3.5	122	55
250	153	182	72	2.2	PH831_0040KX701_0030 MF EZ505U	480	480	1040	12.00	12/1	2100	2100	4000	28	5.5	3.5	122	55
250	187	236	88	1.8	PH831_0040KX701_0030 MF EZ703U	480	480	1040	12.00	12/1	2100	2100	4000	37	5.5	3.5	122	57
250	242	343	114	1.4	PH831_0040KX701_0030 MF EZ705U	480	480	1040	12.00	12/1	2100	2100	4000	49	5.5	3.5	122	62
300	92	105	47	4.6	PH831_0050KX701_0020 MF EZ503U	410	410	1300	10.00	10/1	1800	1800	3500	26	5.0	3.0	170	52
300	113	136	58	3.7	PH831_0050KX701_0020 MF EZ702U	390	390	1300	10.00	10/1	1800	1800	3500	33	5.0	3.0	170	55
300	128	151	65	3.3	PH831_0050KX701_0020 MF EZ505U	600	600	1300	10.00	10/1	1800	1800	3500	31	5.0	3.0	170	55
300	156	197	80	2.7	PH831_0050KX701_0020 MF EZ703U	600	600	1300	10.00	10/1	1800	1800	3500	40	5.0	3.0	170	57
300	201	286	103	2.1	PH831_0050KX701_0020 MF EZ705U	600	600	1300	10.00	10/1	1800	1800	3500	53	5.0	3.0	170	62
300	211	351	108	2.0	PH831_0050KX701_0020 MF EZ802U	600	600	1300	10.00	10/1	1800	1800	3500	77	5.0	3.0	170	71
300	252	456	128	1.7	PH831_0050KX701_0020 MF EZ803U	600	600	1300	10.00	10/1	1800	1800	3500	102	5.0	3.0	170	77
375	73	84	47	4.6	PH831_0040KX701_0020 MF EZ503U	330	330	1040	8.000	8/1	1800	1800	3500	29	5.5	3.5	122	52
375	91	109	58	3.7	PH831_0040KX701_0020 MF EZ702U	310	310	1040	8.000	8/1	1800	1800	3500	35	5.5	3.5	122	55
375	102	121	65	3.3	PH831_0040KX701_0020 MF EZ505U	480	480	1040	8.000	8/1	1800	1800	3500	34	5.5	3.5	122	55
375	125	157	80	2.7	PH831_0040KX701_0020 MF EZ703U	480	480	1040	8.000	8/1	1800	1800	3500	43	5.5	3.5	122	57
375	161	228	103	2.1	PH831_0040KX701_0020 MF EZ705U	480	480	1040	8.000	8/1	1800	1800	3500	55	5.5	3.5	122	62
375	169	281	108	2.0	PH831_0040KX701_0020 MF EZ802U	480	480	1040	8.000	8/1	1800	1800	3500	79	5.5	3.5	122	71
375	201	365	128	1.7	PH831_0040KX701_0020 MF EZ803U	480	480	1040	8.000	8/1	1800	1800	3500	105	5.5	3.5	122	77
429	141	200	86	4.2	PH831_0070KX701_0010 MF EZ705U	690	690	1600	7.000	7/1	1800	1600	3000	68	4.5	2.5	232	62
429	148	246	91	4.0	PH831_0070KX701_0010 MF EZ802U	660	660	1600	7.000	7/1	1800	1600	3000	92	4.5	2.5	232	71
429	176	319	108	3.3	PH831_0070KX701_0010 MF EZ803U	840	840	1600	7.000	7/1	1800	1600	3000	117	4.5	2.5	232	77
600	101	143	86	4.2	PH831_0050KX701_0010 MF EZ705U	490	490	1150	5.000	5/1	1800	1600	3000	75	5.0	3.0	170	62
600	105	175	91	4.0	PH831_0050KX701_0010 MF EZ802U	470	470	1150	5.000	5/1	1800	1600	3000	99	5.0	3.0	170	71
600	126	228	108	3.3	PH831_0050KX701_0010 MF EZ803U	600	600	1150	5.000	5/1	1800	1600	3000	125	5.0	3.0	170	77
750	81	114	86	4.2	PH831_0040KX701_0010 MF EZ705U	390	390	920	4.000	4/1	1800	1600	3000	86	5.5	3.5	122	62
750	84	140	91	4.0	PH831_0040KX701_0010 MF EZ802U	380	380	920	4.000	4/1	1800	1600	3000	110	5.5	3.5	122	71
750	101	182	108	3.3	PH831_0040KX701_0010 MF EZ803U	480	480	920	4.000	4/1	1800	1600	3000	135	5.5	3.5	122	77
PH832KX (n_{1N} = 3000 rpm, $M_{2acc,max}$ = 2100 Nm)																		
14	827	904	92	1.7	PH832_0700KX701_0030 MF EZ501U	1850	1940	3700	210.0	210/1	2100	2100	4000	15	3.0	1.0	421	54
15	788	861	159	1.3	PH832_1000KX701_0020 MF EZ501U	1380	1380	2760	200.0	200/1	1800	1800	3500	18	3.0	1.0	332	54
20	591	646	60	2.6	PH832_0500KX701_0030 MF EZ501U	2100	2200	4200	150.0	150/1	2100	2100	4000	16	3.0	1.0	481	54
20	1017	1099	103	1.5	PH832_0500KX701_0030 MF EZ502U	2100	2300	4200	150.0	150/1	2100	2100	4000	18	3.0	1.0	481	56
20	1017	1140	103	1.5	PH832_0500KX701_0030 MF EZ701U	2100	2300	4200	150.0	150/1	2100	2100	4000	21	3.0	1.0	481	58
20	1333	1525	135	1.2	PH832_0500KX701_0030 MF EZ503U	2100	2300	4200	150.0	150/1	2100	2100	4000	20	3.0	1.0	481	57
21	551	603	83	2.6	PH832_0700KX701_0020 MF EZ501U	1850	1940	3700	140.0	140/1	1800	1800	3500	18	3.0	1.0	421	54
21	949	1026	143	1.5	PH832_0700KX701_0020 MF EZ502U	1850	1940	3700	140.0	140/1	1800	1800	3500	20	3.0	1.0	421	56
21	949	1064	143	1.5	PH832_0700KX701_0020 MF EZ701U	1850	1940	3700	140.0	140/1	1800	1800	3500	23	3.0	1.0	421	58
21	1244	1424	187	1.1	PH832_0700KX701_0020 MF EZ503U	1850	1940	3700	140.0	140/1	1800	1800	3500	23	3.0	1.0	421	57
25	473	517	68	2.3	PH832_0400KX701_0030 MF EZ501U	1760	1760	3840	120.0	120/1	2100	2100	4000	16	3.5	1.5	440	54
25	813	879	117	1.4	PH832_0400KX701_0030 MF EZ502U	1920	1940	3840	120.0	120/1	2100	2100	4000	18	3.5	1.5	440	56
25	813	912	117	1.4	PH832_0400KX701_0030 MF EZ701U	1920	1940	3840	120.0	120/1	2100	2100	4000	21	3.5	1.5	440	58
25	1066	1220	153	1.0	PH832_0400KX701_0030 MF EZ503U	1920	1940	3840	120.0	120/1	2100	2100	4000	20	3.5	1.5	440	57
29	414	452	45	3.5	PH832_0350KX701_0030 MF EZ501U	1540	1540	4200	105.0	105/1	2100	2100	4000	16	3.5	1.5	489	54
29	712	769	78	2.0	PH832_0350KX701_0030 MF EZ502U	2100	2300	4200	105.0	105/1	2100	2100	4000	18	3.5	1.5	489	56
29	712	798	78	2.0	PH832_0350KX701_0030 MF EZ701U	1920	1920	4200	105.0	105/1	2100	2100	4000	21	3.5	1.5	489	58
29	933	1068	102	1.6	PH832_0350KX701_0030 MF EZ503U	2100	2300	4200	105.0	105/1	2100	2100	4000	20	3.5	1.5	489	57
29	1154	1385	126	1.3	PH832_0350KX701_0030 MF EZ702U	2100	2300	4200	105.0	105/1	2100	2100	4000	26	3.5	1.5	489	60
29	1299	1539	141	1.1	PH832_0350KX701_0030 MF EZ505U	2100	2300	4200	105.0	105/1	2100	2100	4000	25	3.5	1.5	489	60
30	394	431	54	4.0	PH832_0500KX701_0020 MF EZ501U	1470	1470	4200	100.0	100/1	1800	1800	3500	18	3.0	1.0	481	54
30	678	733	93	2.3	PH832_0500KX701_0020 MF EZ502U	2100	2300	4200	100.0	100/1	1800	1800	3500	20	3.0	1.0	481	56
30	678	760	93	2.3	PH832_0500KX701_0020 MF EZ701U	1830	1830	4200	100.0	100/1	1800	1800	3500	24	3.0	1.0	481	58
30	889	1017	122	1.8	PH832_0500KX701_0020 MF EZ503U	2100	2300	4200	100.0	100/1	1800	1800	3500	23	3.0	1.0	481	57
30	1099	1319	151	1.4	PH832_0500KX701_0020 MF EZ702U	2100	2300	4200	100.0	100/1	1800	1800	3500	29	3.0	1.0	481	60
30	1237	1466	170	1.3	PH832_0500KX701_0020 MF EZ505U	2100	2300	4200	100.0	100/1	1800	1800	3500	27	3.0	1.0	481	60

n_{2N} [rpm]	M_{2N} [Nm]	$M_{2,0}$ [Nm]	a_{th}	S	Type	M_{2acc} [Nm]	M_{2accHT} [Nm]	M_{2NOT} [Nm]	i	i_{exakt}	n_{1maxDB} EL1,2,5,6 [rpm]	n_{1maxDB} EL3,4 [rpm]	n_{1maxZB} [rpm]	J_1 [kgcm²]	$\Delta\varphi_2$ [arcmin]	$\Delta\varphi_{2red}$ [arcmin]	C_2 [Nm/ arcmin]	m [kg]
PH832KX (n_{1N} = 3000 rpm, $M_{2acc,max}$ = 2100 Nm)																		
36	331	362	48	3.3	PH832_0280KX701_0030 MF EZ501U	1230	1230	4000	84.00	84/1	2100	2100	4000	16	3.5	1.5	451	54
36	569	616	82	1.9	PH832_0280KX701_0030 MF EZ502U	2000	2000	4000	84.00	84/1	2100	2100	4000	18	3.5	1.5	451	56
36	569	639	82	1.9	PH832_0280KX701_0030 MF EZ701U	1540	1540	4000	84.00	84/1	2100	2100	4000	21	3.5	1.5	451	58
36	746	854	107	1.5	PH832_0280KX701_0030 MF EZ503U	2000	2000	4000	84.00	84/1	2100	2100	4000	20	3.5	1.5	451	57
36	923	1108	133	1.2	PH832_0280KX701_0030 MF EZ702U	2000	2000	4000	84.00	84/1	2100	2100	4000	27	3.5	1.5	451	60
36	1039	1231	149	1.1	PH832_0280KX701_0030 MF EZ505U	2000	2000	4000	84.00	84/1	2100	2100	4000	25	3.5	1.5	451	60
38	315	344	61	3.5	PH832_0400KX701_0020 MF EZ501U	1170	1170	3840	80.00	80/1	1800	1800	3500	19	3.5	1.5	440	54
38	542	586	106	2.0	PH832_0400KX701_0020 MF EZ502U	1920	1940	3840	80.00	80/1	1800	1800	3500	21	3.5	1.5	440	56
38	542	608	106	2.0	PH832_0400KX701_0020 MF EZ701U	1470	1470	3840	80.00	80/1	1800	1800	3500	24	3.5	1.5	440	58
38	711	813	138	1.5	PH832_0400KX701_0020 MF EZ503U	1920	1940	3840	80.00	80/1	1800	1800	3500	23	3.5	1.5	440	57
38	879	1055	171	1.3	PH832_0400KX701_0020 MF EZ702U	1920	1940	3840	80.00	80/1	1800	1800	3500	29	3.5	1.5	440	60
38	989	1173	192	1.1	PH832_0400KX701_0020 MF EZ505U	1920	1940	3840	80.00	80/1	1800	1800	3500	28	3.5	1.5	440	60
40	295	323	36	4.4	PH832_0250KX701_0030 MF EZ501U	1100	1100	4200	75.00	75/1	2100	2100	4000	16	3.5	1.5	479	54
40	508	550	62	2.6	PH832_0250KX701_0030 MF EZ502U	2100	2130	4200	75.00	75/1	2100	2100	4000	18	3.5	1.5	479	56
40	508	570	62	2.6	PH832_0250KX701_0030 MF EZ701U	1370	1370	4200	75.00	75/1	2100	2100	4000	21	3.5	1.5	479	58
40	666	763	81	2.0	PH832_0250KX701_0030 MF EZ503U	2100	2300	4200	75.00	75/1	2100	2100	4000	20	3.5	1.5	479	57
40	824	989	100	1.6	PH832_0250KX701_0030 MF EZ702U	2100	2300	4200	75.00	75/1	2100	2100	4000	26	3.5	1.5	479	60
40	928	1099	113	1.4	PH832_0250KX701_0030 MF EZ505U	2100	2300	4200	75.00	75/1	2100	2100	4000	25	3.5	1.5	479	60
40	1134	1429	138	1.1	PH832_0250KX701_0030 MF EZ703U	2100	2300	4200	75.00	75/1	2100	2100	4000	34	3.5	1.5	479	62
43	475	513	70	3.1	PH832_0350KX701_0020 MF EZ502U	1990	1990	4200	70.00	70/1	1800	1800	3500	21	3.5	1.5	489	56
43	475	532	70	3.1	PH832_0350KX701_0020 MF EZ701U	1280	1280	4200	70.00	70/1	1800	1800	3500	24	3.5	1.5	489	58
43	622	712	92	2.3	PH832_0350KX701_0020 MF EZ503U	2100	2300	4200	70.00	70/1	1800	1800	3500	23	3.5	1.5	489	57
43	769	923	114	1.9	PH832_0350KX701_0020 MF EZ702U	2100	2300	4200	70.00	70/1	1800	1800	3500	29	3.5	1.5	489	60
43	866	1026	128	1.7	PH832_0350KX701_0020 MF EZ505U	2100	2300	4200	70.00	70/1	1800	1800	3500	27	3.5	1.5	489	60
43	1058	1334	156	1.4	PH832_0350KX701_0020 MF EZ703U	2100	2300	4200	70.00	70/1	1800	1800	3500	37	3.5	1.5	489	62
50	407	440	51	3.1	PH832_0200KX701_0030 MF EZ502U	1700	1700	4200	60.00	60/1	2100	2100	4000	18	3.5	1.5	462	56
50	407	456	51	3.1	PH832_0200KX701_0030 MF EZ701U	1100	1100	4200	60.00	60/1	2100	2100	4000	21	3.5	1.5	462	58
50	533	610	67	2.3	PH832_0200KX701_0030 MF EZ503U	2100	2300	4200	60.00	60/1	2100	2100	4000	20	3.5	1.5	462	57
50	660	791	83	1.9	PH832_0200KX701_0030 MF EZ702U	2100	2250	4200	60.00	60/1	2100	2100	4000	26	3.5	1.5	462	60
50	742	879	94	1.7	PH832_0200KX701_0030 MF EZ505U	2100	2300	4200	60.00	60/1	2100	2100	4000	25	3.5	1.5	462	60
50	907	1143	115	1.4	PH832_0200KX701_0030 MF EZ703U	2100	2300	4200	60.00	60/1	2100	2100	4000	34	3.5	1.5	462	62
54	221	241	43	5.0	PH832_0280KX701_0020 MF EZ501U	820	820	4000	56.00	56/1	1800	1800	3500	19	3.5	1.5	451	54
54	380	410	74	2.9	PH832_0280KX701_0020 MF EZ502U	1590	1590	4000	56.00	56/1	1800	1800	3500	21	3.5	1.5	451	56
54	380	426	74	2.9	PH832_0280KX701_0020 MF EZ701U	1030	1030	4000	56.00	56/1	1800	1800	3500	24	3.5	1.5	451	58
54	498	569	97	2.2	PH832_0280KX701_0020 MF EZ503U	2000	2000	4000	56.00	56/1	1800	1800	3500	23	3.5	1.5	451	57
54	616	739	120	1.8	PH832_0280KX701_0020 MF EZ702U	2000	2000	4000	56.00	56/1	1800	1800	3500	29	3.5	1.5	451	60
54	693	821	135	1.6	PH832_0280KX701_0020 MF EZ505U	2000	2000	4000	56.00	56/1	1800	1800	3500	28	3.5	1.5	451	60
54	846	1067	165	1.3	PH832_0280KX701_0020 MF EZ703U	2000	2000	4000	56.00	56/1	1800	1800	3500	37	3.5	1.5	451	62
60	339	366	56	3.8	PH832_0250KX701_0020 MF EZ502U	1420	1420	4200	50.00	50/1	1800	1800	3500	21	3.5	1.5	479	56
60	339	380	56	3.8	PH832_0250KX701_0020 MF EZ701U	920	920	4200	50.00	50/1	1800	1800	3500	24	3.5	1.5	479	58
60	444	508	73	2.9	PH832_0250KX701_0020 MF EZ503U	1970	1970	4200	50.00	50/1	1800	1800	3500	23	3.5	1.5	479	57
60	550	660	91	2.4	PH832_0250KX701_0020 MF EZ702U	1880	1880	4200	50.00	50/1	1800	1800	3500	29	3.5	1.5	479	60
60	618	733	102	2.1	PH832_0250KX701_0020 MF EZ505U	2100	2300	4200	50.00	50/1	1800	1800	3500	28	3.5	1.5	479	60
60	756	953	124	1.7	PH832_0250KX701_0020 MF EZ703U	2100	2300	4200	50.00	50/1	1800	1800	3500	37	3.5	1.5	479	62
60	976	1383	161	1.3	PH832_0250KX701_0020 MF EZ705U	2100	2300	4200	50.00	50/1	1800	1800	3500	49	3.5	1.5	479	68
63	325	352	47	3.4	PH832_0160KX701_0030 MF EZ502U	1360	1360	4000	48.00	48/1	2100	2100	4000	18	3.5	1.5	415	56
63	325	365	47	3.4	PH832_0160KX701_0030 MF EZ701U	880	880	4000	48.00	48/1	2100	2100	4000	21	3.5	1.5	415	58
63	427	488	61	2.6	PH832_0160KX701_0030 MF EZ503U	1860	1860	4000	48.00	48/1	2100	2100	4000	21	3.5	1.5	415	57
63	528	633	76	2.1	PH832_0160KX701_0030 MF EZ702U	1800	1800	4000	48.00	48/1	2100	2100	4000	27	3.5	1.5	415	60
63	594	704	85	1.9	PH832_0160KX701_0030 MF EZ505U	1860	1860	4000	48.00	48/1	2100	2100	4000	25	3.5	1.5	415	60
63	726	915	104	1.5	PH832_0160KX701_0030 MF EZ703U	1860	1860	4000	48.00	48/1	2100	2100	4000	35	3.5	1.5	415	62
63	937	1328	135	1.2	PH832_0160KX701_0030 MF EZ705U	1860	1860	4000	48.00	48/1	2100	2100	4000	47	3.5	1.5	415	68
75	271	293	46	4.6	PH832_0200KX701_0020 MF EZ502U	1140	1140	4200	40.00	40/1	1800	1800	3500	21	3.5	1.5	462	56
75	271	304	46	4.6	PH832_0200KX701_0020 MF EZ701U	730	730	4200	40.00	40/1	1800	1800	3500	24	3.5	1.5	462	58
75	355	407	61	3.5	PH832_0200KX701_0020 MF EZ503U	1580	1580	4200	40.00	40/1	1800	1800	3500	23	3.5	1.5	462	57
75	440	528	75	2.8	PH832_0200KX701_0020 MF EZ702U	1500	1500	4200	40.00	40/1	1800	1800	3500	29	3.5	1.5	462	60
75	495	586	85	2.5	PH832_0200KX701_0020 MF EZ505U	2100	2300	4200	40.00	40/1	1800	1800	3500	28	3.5	1.5	462	60
75	605	762	104	2.1	PH832_0200KX701_0020 MF EZ703U	2100	2300	4200	40.00	40/1	1800	1800	3500	37	3.5	1.5	462	62
75	780	1107	134	1.6	PH832_0200KX701_0020 MF EZ705U	2100	2300	4200	40.00	40/1	1800	1800	3500	49	3.5	1.5	462	68
75	817	1359	140	1.5	PH832_0200KX701_0020 MF EZ802U	2100	2300	4200	40.00	40/1	1800	1800	3500	74	3.5	1.5	462	76
94	284	325	55	3.9	PH832_0160KX701_0020 MF EZ503U	1260	1260	4000	32.00	32/1	1800	1800	3500	24	3.5	1.5	415	57
94	352	422	68	3.1	PH832_0160KX701_0020 MF EZ702U	1200	1200	4000	32.00	32/1	1800	1800	3500	30	3.5	1.5	415	60
94	396	469	77	2.8	PH832_0160KX701_0020 MF EZ505U	1860	1860	4000	32.00	32/1	1800	1800	3500	28	3.5	1.5	415	60
94	484	610	94	2.3	PH832_0160KX701_0020 MF EZ703U	1860	1860	4000	32.00	32/1	1800	1800	3500	38	3.5	1.5	415	62

n_{2N} [rpm]	M_{2N} [Nm]	$M_{2,0}$ [Nm]	a_{th}	S	Type	M_{2acc} [Nm]	M_{2accHT} [Nm]	M_{2NOT} [Nm]	i	i_{exakt}	n_{1maxDB} EL1,2,5,6 [rpm]	n_{1maxDB} EL3,4 [rpm]	n_{1maxZB} [rpm]	J_1 [kgcm²]	$\Delta\varphi_2$ [arcmin]	$\Delta\varphi_{2red}$ [arcmin]	C_2 [Nm/arcmin]	m [kg]
PH832KX (n_{1N} = 3000 rpm, $M_{2acc,max}$ = 2100 Nm)																		
94	624	885	121	1.8	PH832_0160KX701_0020 MF EZ705U	1860	1860	4000	32.00	32/1	1800	1800	3500	50	3.5	1.5	415	68
94	654	1088	127	1.7	PH832_0160KX701_0020 MF EZ802U	1860	1860	4000	32.00	32/1	1800	1800	3500	74	3.5	1.5	415	76
94	780	1413	152	1.4	PH832_0160KX701_0020 MF EZ803U	1860	1860	4000	32.00	32/1	1800	1800	3500	99	3.5	1.5	415	82

12.3 Dimensional drawings

In this chapter you can find the dimensions of the geared motors.

There is a dimensional drawing for every possible shaft/housing design, each with the tables for gear unit dimensions, motor dimensions and geared motor dimensions.

Dimensions can exceed the specifications of ISO 2768-mK due to casting tolerances or accumulation of individual tolerances.

We reserve the right to make dimensional changes due to ongoing technical development.

You can download 3D models of our standard drives at http://configurator.stoeber.de.

Combination options and the dimensions of forced ventilated geared motors can also be found at http://configurator.stoeber.de.

12.3.1 F shaft design (flange shaft)

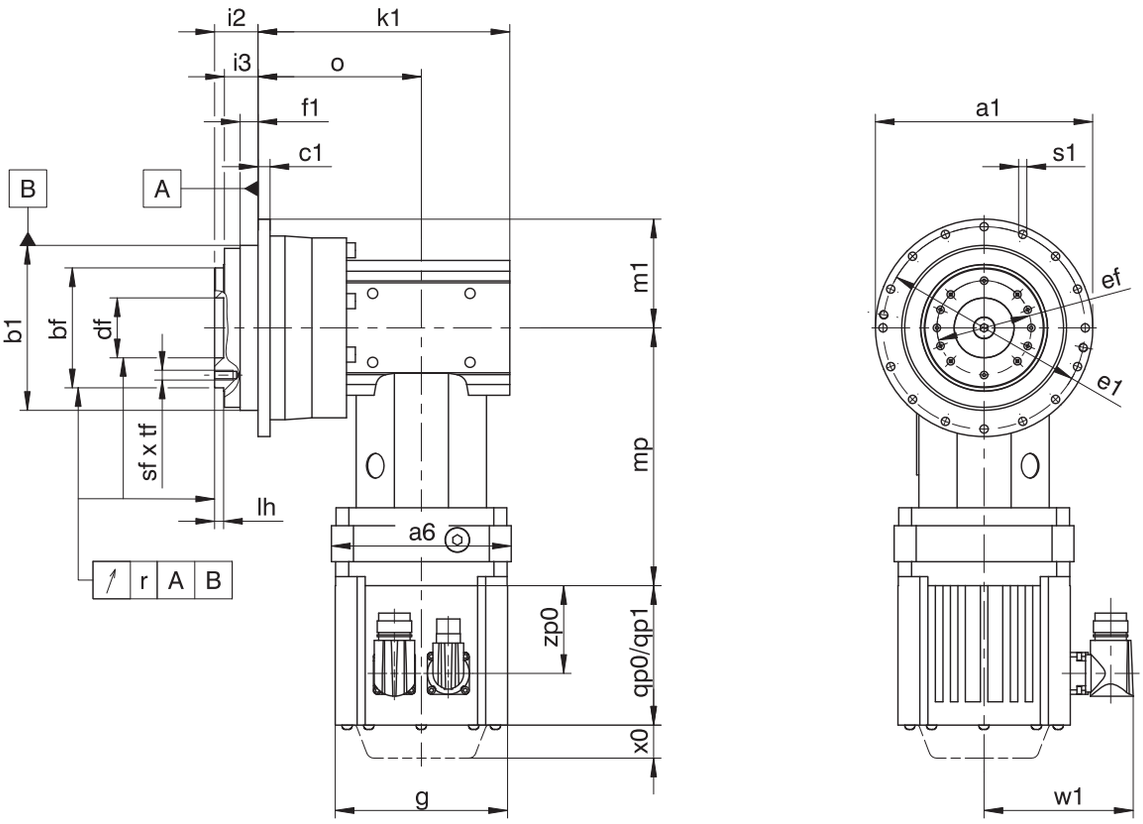

PH3 | PH4

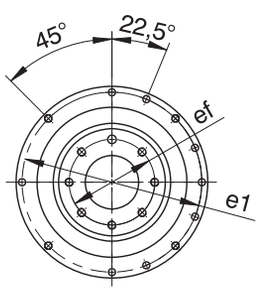

PH5

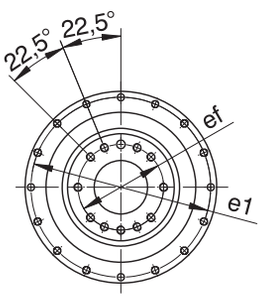

PH7/PH8

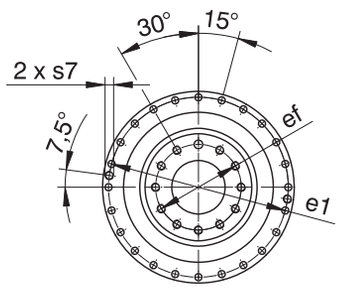

qp0	Applies to motors without brake.	qp1	Applies to motors with brake.
x0	Applies to encoders using an optical measuring method.	w1	Different for the One Cable Solution (OCS), see the chapter [▸ 17.4]

Dimensions of gear units

Type	Øa1	Øb1	Øbf	c1	Ødf	Øe1	Øef	f1	i2	i3	k1	lh	m1	o	r	Øs1	s7	sf	tf
PH331_KX301_	86_{h7}	64_{h7}	40_{h7}	4	20.0^{H6}	79	32	7	19.5	16.5	113.5	4	43.0	73.5	0.020	4.5	–	M5	7
PH332_KX301_	86_{h7}	64_{h7}	40_{h7}	4	20.0^{H6}	79	32	7	19.5	16.5	147.0	4	43.0	107.0	0.020	4.5	–	M5	7
PH431_KX401_	118_{h7}	90_{h7}	63_{h7}	7	31.5^{H6}	109	50	10	30.0	24.0	139.0	6	59.0	89.0	0.020	5.5	–	M6	11
PH432_KX301_	118_{h7}	90_{h7}	63_{h7}	7	31.5^{H6}	109	50	10	30.0	24.0	161.5	6	59.0	121.5	0.020	5.5	–	M6	11
PH531_KX501_	145_{h7}	110_{h7}	80_{h7}	8	40.0^{H6}	135	63	12	29.0	23.0	168.0	6	72.5	109.0	0.020	5.5	–	M6	11
PH532_KX401_	145_{h7}	110_{h7}	80_{h7}	8	40.0^{H6}	135	63	12	29.0	23.0	187.5	6	72.5	137.5	0.020	5.5	–	M6	11
PH731_KX701_	179_{h7}	140_{h7}	100_{h7}	10	50.0^{H6}	168	80	12	38.0	32.0	203.0	6	89.5	129.0	0.025	6.6	–	M8	14
PH732_KX501_	179_{h7}	140_{h7}	100_{h7}	10	50.0^{H6}	168	80	12	38.0	32.0	226.0	6	89.5	167.0	0.025	6.6	–	M8	14
PH831_KX701_	247_{h7}	200_{h7}	160_{h7}	12	80.0^{H6}	233	125	15	50.0	42.0	235.5	8	123.5	161.5	0.030	9.0	M10	M10	18
PH832_KX701_	247_{h7}	200_{h7}	160_{h7}	12	80.0^{H6}	233	125	15	50.0	42.0	293.0	8	123.5	219.0	0.030	9.0	M10	M10	18

Dimensions of motors

Type	□g	qp0	qp1	w1	x0	zp0
EZ301U	72	90	130.0	55.5	21	54.5
EZ302U	72	112	152.0	55.5	21	76.5
EZ303U	72	134	174.0	55.5	21	98.5
EZ401U	98	98	146.5	91.0	22	56.0
EZ402U	98	123	171.5	91.0	22	81.0
EZ404U	98	173	221.5	91.0	22	131.0
EZ501U	115	93	147.5	100.0	22	58.5
EZ502U	115	118	172.5	100.0	22	83.5
EZ503U	115	143	197.5	100.0	22	108.5
EZ505U	115	193	247.5	100.0	22	158.5
EZ701U	145	102	161.0	115.0	22	64.0
EZ702U	145	127	186.0	115.0	22	89.0
EZ703U	145	152	211.0	115.0	22	114.0
EZ705U	145	207	266.0	134.0	22	165.0
EZ802U	190	197	274.0	156.5	22	143.0
EZ803U	190	238	315.0	156.5	22	184.0
EZ805U	190	320	397.0	156.5	22	266.0

Dimensions of geared motors

Type	EZ3		EZ4		EZ5		EZ7		EZ8	
	□a6	mp	□a6	mp	□a6	mp	□a6	mp	□a6	mp
PH331_KX301_	75	139.5	100	134.0	–	–	–	–	–	–
PH332_KX301_	75	139.5	–	–	–	–	–	–	–	–
PH431_KX401_	100	151.0	100	145.5	115	150.0	140	153.0	–	–
PH432_KX301_	75	139.5	100	134.0	–	–	–	–	–	–
PH531_KX501_	–	–	120	176.5	120	172.0	140	183.0	–	–
PH532_KX401_	100	151.0	100	145.5	115	150.0	140	153.0	–	–
PH731_KX701_	–	–	–	–	150	214.5	150	217.5	190	242.5
PH732_KX501_	–	–	120	176.5	120	172.0	140	183.0	–	–
PH831_KX701_	–	–	–	–	150	214.5	150	217.5	190	242.5
PH832_KX701_	–	–	–	–	150	214.5	150	217.5	190	242.5

12.4 Type designation

This chapter shows you an explanation of the type designation with the associated options.

Additional ordering information not included in the type designation can be found at the end of the chapter.

Example code

PH	7	3	1	S	F	S	S	0050	KX701VF	0010	MF	EZ703U

Explanation

Code	Designation	Design
PH	Type	Planetary gear unit
7	Size	7 (example)
3	Generation	Generation 3
1 2	Stages	Single-stage Two-stage
S	Housing	Standard
F	Shaft	Flange shaft
S V	Bearing	Standard bearing Reinforced bearing (PH3 – PH5)
S R	Backlash	Standard Reduced
0050	Transmission ratio of output (i x 10)	i = 5 (example)
KX701 **VF**	Input	KX7 right-angle geared motor (example)
0010	Transmission ratio of input (i x 10)	i = 1 (example)
MF	Motor adapter	Motor adapter with FlexiAdapt coupling
EZ703U	Motor	EZ synchronous servo motor

To complete the type designation, also specify the following in your order:

- For a detailed type designation of the motor, see the chapter [▸ 17]
- Mounting position, see the chapter [▸ 12.5.3]
- Radial shaft seal rings at the output made of NBR or FKM (option), see the chapter [▸ 12.6.3]
- Position of the plug connectors, see the chapter [▸ 12.5.5]
- Reverse operation of the output shaft from ±20° to ±90° and horizontal installation, note the chapter Reverse operation

12.4.1 Nameplate

An example geared motor nameplate is explained in the figure below.

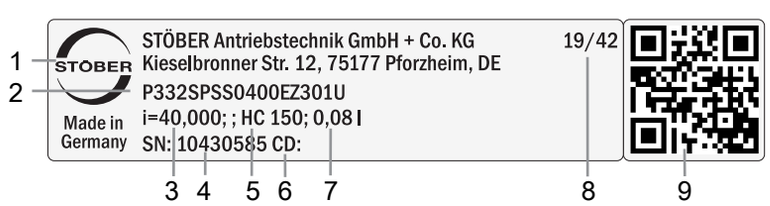

Code	Designation
1	Name of manufacturer
2	Type designation
3	Gear ratio of the gear unit
4	Serial number of the gear unit
5	Lubricant specification
6	Customer-specific data
7	Lubricant fill volume
8	Date of manufacture (year/calendar week)
9	QR code (link to product information)

12.4.1.1 Supporting documents

You can view or download supporting documents for the product by reading off the serial number on the nameplate of the product and entering it at the following address online:
https://id.stober.com

Alternatively, you can use a suitable mobile device to scan in the QR code on the nameplate of the product in order to be linked to the supporting documents.

12.5 Product description

12.5.1 Input options

EZ synchronous servo motor

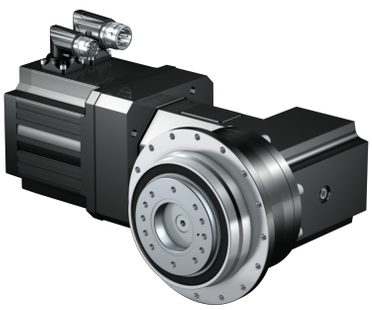

http://www.stoeber.de/en/PHKXEZ

12.5.2 Installation conditions

The torque and force values listed in this catalog are valid under the following conditions:

- When the flange shaft and gear housing are fastened on the machine side using screws of strength class 12.9
- When the gear housings are adjusted at pilot øb1. The machine-side fit must be H7.
- When the flange shaft is adjusted using the connecting element at pilot øbf or ødf

12.5.3 Mounting positions

The following table shows the standard mounting positions.

The numbers identify the gear unit sides. The mounting position is defined by the gear side facing downwards.

EL1	EL2	EL3
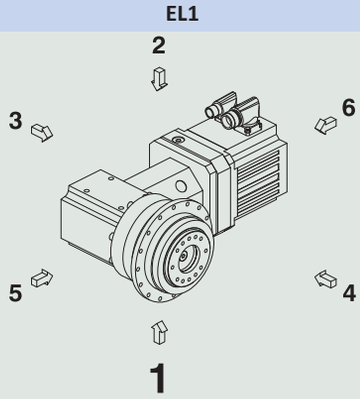	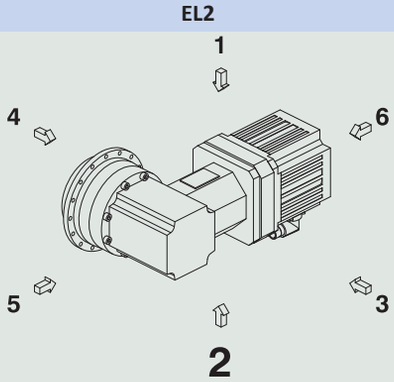	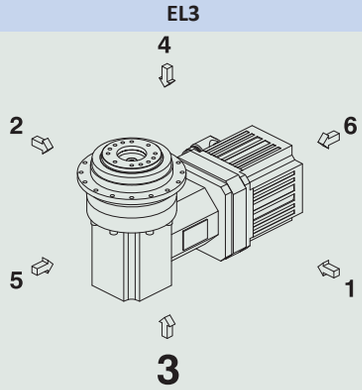

EL4	EL5	EL6
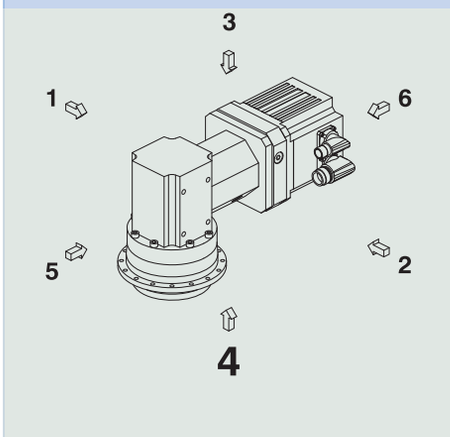	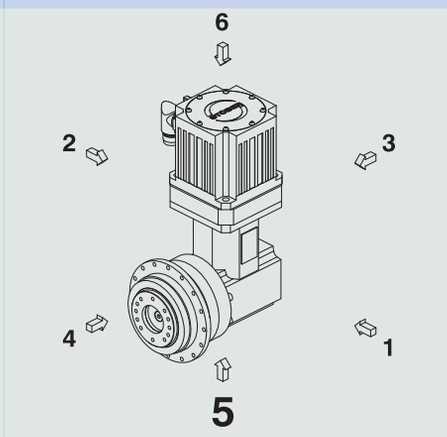	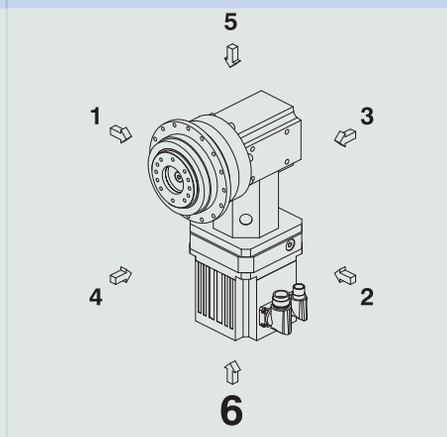

Since the lubricant filling volume of the gear unit depends on the mounting position, the mounting position must be specified when ordering.

12.5.4 Lubricants

STOBER fills the gear units with the amount and type of lubricant specified on the nameplate. The filling volume and the structure of the gear units depend on the mounting position.

Only install the gear units in the intended mounting position! Reposition the gear units only after consulting STOBER. Otherwise, STOBER assumes no liability for the gear units.

You will receive lubricants for use in the food industry upon request.

12.5.5 Position of the plug connectors

Mounting position EL1 Plug connector in 270° position (standard)	Mounting position EL4 Plug connector in 270° position (standard)
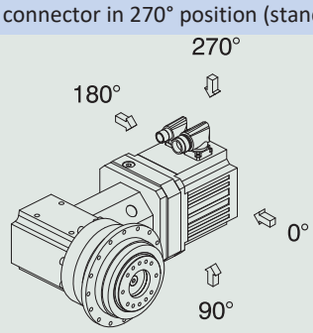	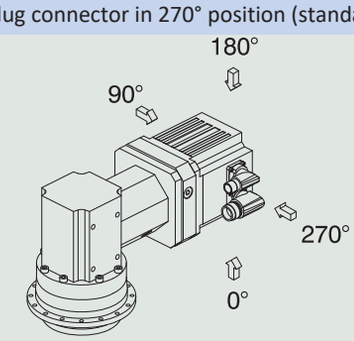

Indicate variations for your geared motor in the order.

Note that the plug connector position rotates along with the geared motor if the geared motor is in another mounting position.

12.5.6 Other product features

Feature	Value
Max. permitted gear unit temperature (on the surface of the gear unit)	≤ 90 °C
Paint	Black RAL 9005
Explosion-proof design in accordance with (ATEX) Directive 2014/34/EU (optional)	Not available
Efficiency:	
η_{get} two-stage	95%
η_{get} three-stage	92%
Protection class:[1]	
Gear unit	IP65
Motor	IP56, optionally IP66

[1] Observe the protection class of all the components.

12.5.7 Direction of rotation

PH3KX_ – PH5KX_	PH7KX_ – PH8KX_
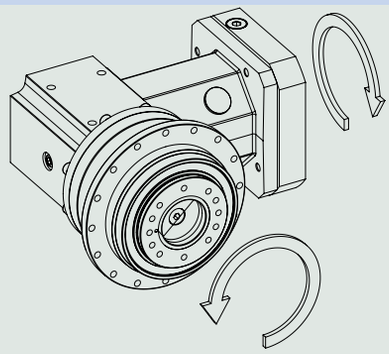	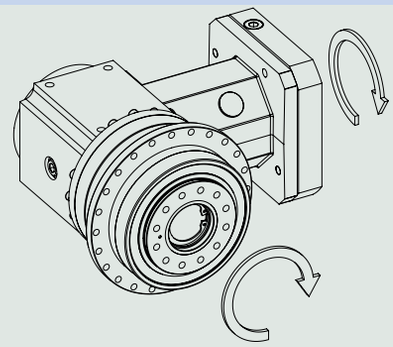

The pictures show mounting position EL1.

12.6 Project configuration

Project your drives using our SERVOsoft designing software. Download SERVOsoft for free at https://www.stoeber.de/en/ServoSoft.

Observe the limit conditions in this chapter to ensure a safe design for your drives.

An explanation of the formula symbols can be found in Chapter [▸ 23.1].

The formula symbols for values actually present in the application are marked with *.

12.6.1 Calculation of the operating point

Check the following conditions for operating points other than the nominal point M_{2N} specified in the selection tables.

For mounting positions EL1, EL2, EL5, EL6:

$$n_{1m*} \leq \frac{n_{1maxDBEL1,2,5,6}}{fB_T}$$

For mounting positions EL3, EL4:

$$n_{1m*} \leq \frac{n_{1maxDBEL3,4}}{fB_T}$$

For all mounting positions:

$$n_{1max*} \leq \frac{n_{1maxZB}}{fB_T}$$

$$M_{2eff*} \leq M_{2th}$$

$$M_{2acc*} \leq \frac{M_{2acc}}{fB_{ZB}}$$

$$M_{2NOT*} \leq M_{2NOT}$$

$$M_{2eq*} \leq M_{2N} \cdot \frac{S}{fB_{op} \cdot fB_t}$$

Refer to the selection tables for the values for $n_{1maxDBEL1,2,5,6}$ $n_{1maxDBEL3,4}$, n_{1maxZB}, M_{2acc} (M_{2accHT} for reduced backlash), M_{2NOT}, M_{2N} and S.

The values for fB_T, fB_{op}, fB_t and fB_{ZB} can be found in the corresponding tables in this chapter.

Calculate the thermal limit torque M_{2th} for a duty cycle > 50%.

Example of cyclic operation

The following calculations are based on a representation of the power taken from the output based in accordance with the following example:

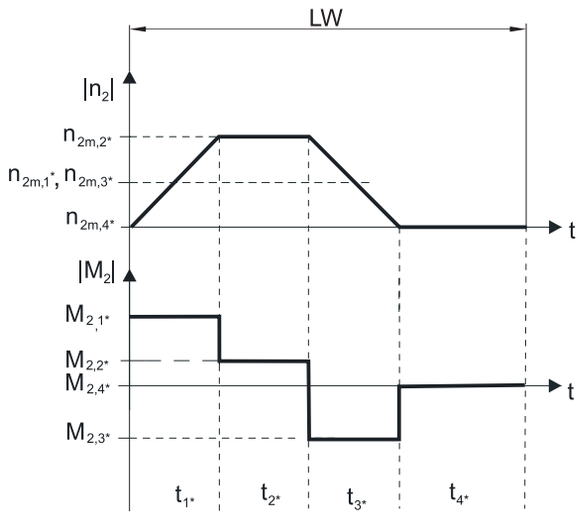

Calculation of the actual average input speed

$$n_{1m*} = n_{2m*} \cdot i$$

$$n_{2m*} = \frac{|n_{2m,1*}| \cdot t_{1*} + \ldots + |n_{2m,n*}| \cdot t_{n*}}{t_{1*} + \ldots + t_{n*}}$$

If $t_{1*} + \ldots + t_{3*} \geq 6$ min, calculate n_{2m*} without the rest phase t_{4*}.

The values for the ratio i can be found in the selection tables.

Calculation of the actual effective torque

$$M_{2eff*} = \sqrt{\frac{t_{1*} \cdot M_{2,1*}^{2} + \ldots + t_{n*} \cdot M_{2,n*}^{2}}{t_{1*} + \ldots + t_{n*}}}$$

Calculation of the actual equivalent torque

$$M_{2eq*} = \sqrt[3]{\frac{|n_{2m,1*}| \cdot t_{1*} \cdot |M_{2,1*}^{3}| + \ldots + |n_{2m,n*}| \cdot t_{n*} \cdot |M_{2,n*}^{3}|}{|n_{2m,1*}| \cdot t_{1*} + \ldots + |n_{2m,n*}| \cdot t_{n*}}}$$

Calculation of the thermal limit torque

Calculate the thermal limit torque M_{2th} for a duty cycle $ED_{10} > 50\%$ and the actual average input speed n_{1m*}. (At $K_{mot,th} \leq 0$ you must reduce the average input speed n_{1m*} accordingly or select another geared motor size.)

$$M_{2th} = M_{op} \cdot i \cdot K_{mot,th}$$

$$K_{mot,th} = 0{,}93 - \frac{a_{th}}{1000} \cdot athEL \cdot fB_T \cdot \left(\frac{n_{1m*}}{1000}\right)^3$$

The values for i and a_{th} can be found in the selection tables.

The values for a_{thEL} and fB_T can be found in the corresponding tables in this chapter.

The value for the torque of the motor at operating point M_{op} with the determined average input speed n_{1m*} can be found in the motor curve of Chapter [▶ 17.3]. Note the size, nominal speed n_N and cooling type of the motor. The figure below shows an example of reading the torque M_{op} of a motor with convection cooling at the operating point.

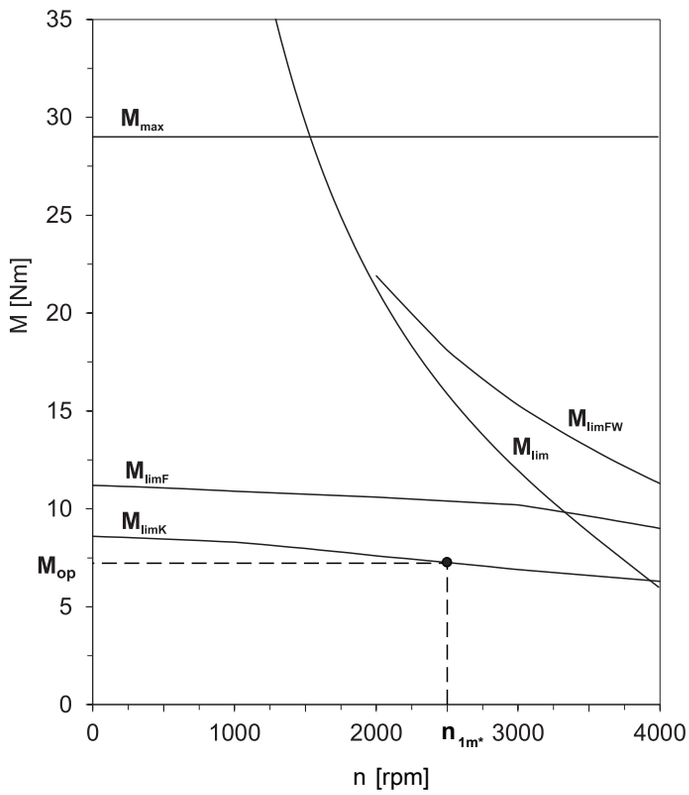

Operating factors

Parameter a_{thEL}

Mounting position	a_{thEL}
EL1, 2, 5, 6	1.0
EL3, 4	1.1

Operating mode	fB_{op}
Uniform continuous operation	1.00
Cyclic operation	1.25
Reversing load cyclic operation	1.40

Run time	fB_t
Daily runtime ≤ 8 h	1.00
Daily runtime ≤ 16 h	1.15
Daily runtime ≤ 24 h	1.20

Cyclic operation	fB_{ZB}
≤ 1000 load changes/hour (LW/h)	1.00
> 1000 load changes/hour (LW/h)	1.15

Temperature		fB_T
Motor cooling	**Surrounding temperature**	
Motor with forced ventilation	≤ 20 °C	0.9
	≤ 30 °C	1.0
	≤ 40 °C	1.15
Motor with convection cooling	≤ 20 °C	1.0
	≤ 30 °C	1.1
	≤ 40 °C	1.25

Notes

- The maximum permitted gear unit temperature (see the "Other product features" chapter) must not be exceeded. Doing so may result in damage to the geared motor.
- For braking from full speed (for example when the power fails or when setting up the machine), note the permitted gear unit torques (M_{2acc}, M_{2NOT}) in the selection tables.

12.6.2 Permitted shaft loads for the output shaft

The values specified in the tables apply to the permitted shaft loads:

- For shaft dimensions in accordance with the catalog
- For output speeds $n_{2m*} \leq 100$ rpm ($F^{2axN} = F_{2ax100}$; $F_{2radN} = F_{2rad100}$; $M_{2kN} = M_{2k100}$)
- Only if radial forces on the gear unit are stabilized by its pilots (housing, flange shaft)

Permitted shaft loads for standard bearing S

Type	z_2 [mm]	F_{2ax100} [N]	$F_{2rad100}$ [N]	$F_{2rad,acc}$ [N]	M_{2k100} [Nm]	$M_{2k,acc}$ [Nm]	C_{2k} [Nm/arcmin]
PH3	62.5	1650	1613	1613	101	101	75
PH4	83.0	2150	3095	3571	257	296	192
PH5	97.0	4150	4536	4897	440	475	429
PH7	86.0	6150	17045	17045	1466	1466	500
PH8	125.5	10050	27778	27778	3486	3486	1550
PH9	155.0	33000	48387	70968	7500	11000	7500
PH10	171.0	50000	51462	73099	8800	12500	9500

Permitted shaft loads for reinforced bearing V

Type	z_2 [mm]	F_{2ax100} [N]	$F_{2rad100}$ [N]	$F_{2rad,acc}$ [N]	M_{2k100} [Nm]	$M_{2k,acc}$ [Nm]	C_{2k} [Nm/arcmin]
PH3	66.5	2200	2250	2250	150	150	80
PH4	88.5	2900	4000	4000	354	354	217
PH5	104.0	5000	5500	5500	572	572	478

For other output speeds, download diagrams at http://configurator.stoeber.de.

The following applies to output speeds n_{2m*} > 100 rpm:

$$F_{2axN} = \frac{F_{2ax100}}{\sqrt[3]{\frac{n_{2m*}}{100\ \text{rpm}}}} \qquad F_{2radN} = \frac{F_{2rad100}}{\sqrt[3]{\frac{n_{2m*}}{100\ \text{rpm}}}} \qquad M_{2kN} = \frac{M_{2k100}}{\sqrt[3]{\frac{n_{2m*}}{100\ \text{rpm}}}}$$

The values for F_{2ax100}, $F_{2rad100}$ and M_{2k100} can be found in the table "Permitted shaft loads" in this chapter.

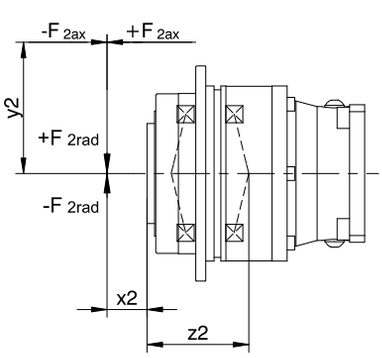

Fig. 1: Force application points

You can determine the permitted radial forces from the permitted breakdown torque M_{2kN} and $M_{2k,acc}$. The actual radial forces may not exceed the permitted radial forces. The permitted radial forces pertain to the shaft end (x2 = 0).

$$M_{2k,acc*} = \frac{2 \cdot F_{2ax*} \cdot y_2 + F_{2rad,acc*} \cdot (x_2 + z_2)}{1000} \leq M_{2k,acc}$$

For applications with multiple axial and/or radial forces, you must add the forces as vectors.

In the event of EMERGENCY OFF operation (max. 1000 load changes), you can multiply the permitted forces and torques for F_{2ax100}, $F_{2rad100}$ and M_{2k100} by a factor of two.

Also note the calculation for equivalent values:

$$M_{2k,eq^*} = \sqrt[3]{\frac{\left|n_{2m,1^*}\right| \cdot t_{1^*} \cdot \left|M_{2k,acc,1^*}{}^3\right| + \ldots + \left|n_{2m,n^*}\right| \cdot t_{n^*} \cdot \left|M_{2k,acc,n^*}{}^3\right|}{\left|n_{2m,1^*}\right| \cdot t_{1^*} + \ldots + \left|n_{2m,n^*}\right| \cdot t_{n^*}}} \leq M_{2kN}$$

$$F_{2rad,eq^*} = \sqrt[3]{\frac{\left|n_{2m,1^*}\right| \cdot t_{1^*} \cdot \left|F_{2rad,acc,1^*}{}^3\right| + \ldots + \left|n_{2m,n^*}\right| \cdot t_{n^*} \cdot \left|F_{2rad,acc,n^*}{}^3\right|}{\left|n_{2m,1^*}\right| \cdot t_{1^*} + \ldots + \left|n_{2m,n^*}\right| \cdot t_{n^*}}} \leq F_{2radN}$$

$$F_{2ax,eq^*} \leq F_{2axN}$$

The following apply to the bearing service life L_{10h} ($ED_{10} \leq 40\%$):

$L_{10h} > 10000$ h with $1 < M_{2kN}/M_{2k^*} < 1.25$

$L_{10h} > 20000$ h with $1.25 < M_{2kN}/M_{2k^*} < 1.5$

$L_{10h} > 30000$ h with $1.5 < M_{2kN}/M_{2k^*}$

For different duty cycles:

$$L_{10h} > L_{10h(ED_{10}=40\%)} \cdot \frac{40\%}{ED_{10}}$$

12.6.3 Recommendation for radial shaft seal rings

For a duty cycle > 60% and higher surrounding temperatures, we recommend radial shaft seal rings made of FKM at the output.

Properties:

- Excellent temperature resistance
- High chemical stability
- Very good resistance to aging
- Excellent resistance in oils and greases
- For use in the food, beverage and pharmaceutical industries

Leak-proofness

Our gear units are equipped with high-quality radial shaft seal rings and checked for leaks. However, a leak cannot be fully ruled out over the length of use of a gear unit. If you use a gear unit with goods incompatible with the lubricant, you must take measures to prevent direct contact with the gear unit lubricant in case of a leak.

12.6.4 Reverse operation

To ensure lubrication for circulating gearing parts during cyclic reverse operation from ± 20° to ± 90° at the output, pay careful attention to the position of the output shaft for the horizontal mounting of the gear unit, as shown in the diagrams below.

The images show the center position of reverse operation.

Cyclic reverse operation ≤ ± 20° on request.

Size 3 – 10
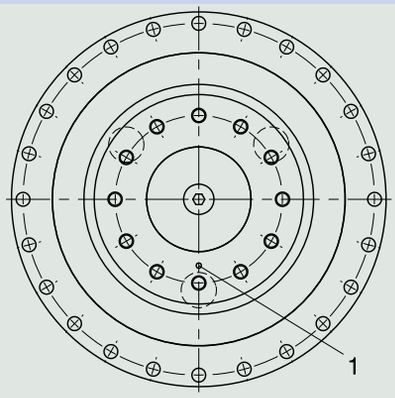
1 Position of the mark: bottom

Please note that the hole pattern may be different, depending on the size of the planetary gear unit.

12.7 Additional documentation

Additional documentation related to the product can be found at
http://www.stoeber.de/en/downloads/

Enter the ID of the documentation in the Search... field.

Documentation	ID
Operating manual for KL/KS/PHK/PHKX/PHQK/PK/PKX right-angle servo gear units and right-angle servo geared motors	443150_en

13 PHK right-angle planetary geared motors

Table of contents

13.1 Overview ... 332

13.2 Selection tables ... 333

13.3 Dimensional drawings ... 347

13.3.1 F shaft design (flange shaft) ... 348

13.4 Type designation ... 350

13.4.1 Type designation PH5K_ – PH8K_ ... 350

13.4.2 Type designation PH9K_ – PH10K_ ... 351

13.4.3 Nameplate ... 351

13.5 Product description ... 352

13.5.1 Input options ... 352

13.5.2 Installation conditions ... 352

13.5.3 Mounting positions ... 353

13.5.4 Lubricants ... 353

13.5.5 Position of the plug connectors ... 354

13.5.6 Other product features ... 354

13.5.7 Direction of rotation ... 354

13.6 Project configuration ... 354

13.6.1 Calculation of the operating point ... 355

13.6.2 Permitted shaft loads for the output shaft ... 357

13.6.3 Recommendation for radial shaft seal rings ... 359

13.6.4 Reverse operation ... 359

13.7 Additional documentation ... 359

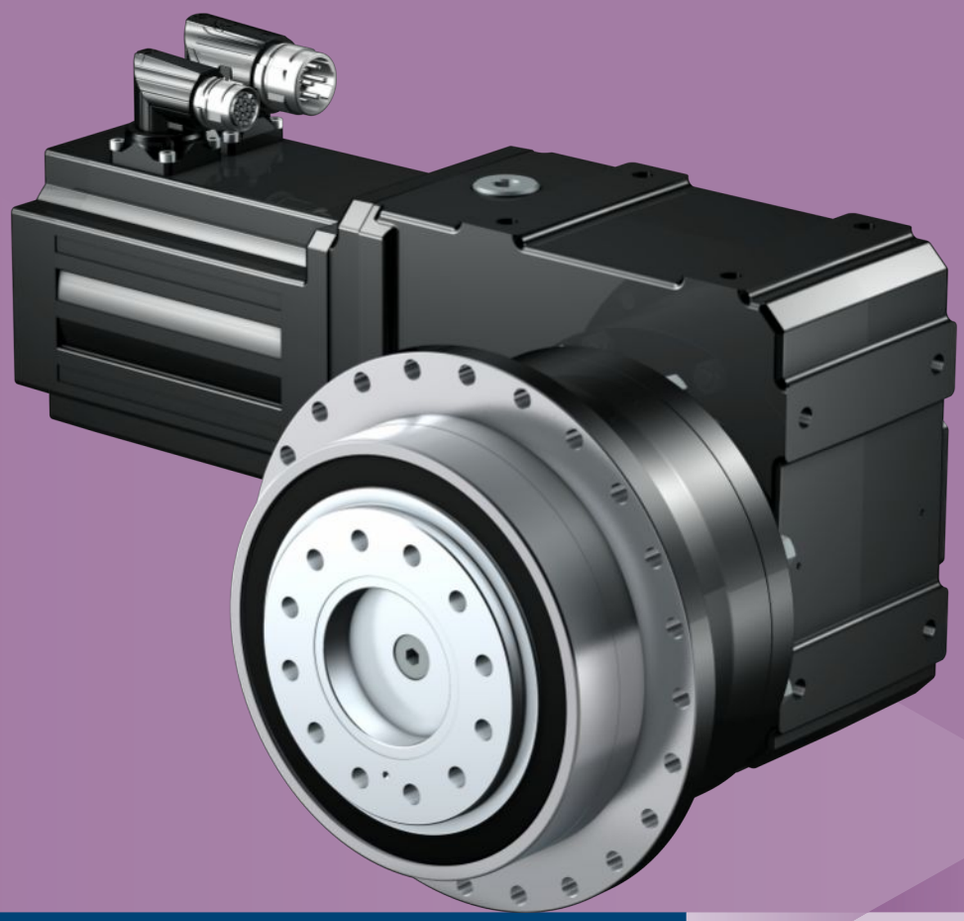

13

Right-angle planetary geared motors

PHK

13.1 Overview

High-performance precision right-angle planetary geared motors

Features

Power density	★★★★☆
Backlash	★★★★★
Price category	€€€€
Shaft load	★★★★★
Smooth operation	★★★☆☆
Torsional stiffness	★★★★☆
Mass moment of inertia	★★★★★
Helical gearing	✓
Maintenance-free	✓
Continuous operation without cooling	✓
Stiff output bearings due to pretension	✓
Reinforced output bearing (PH3 – PH5)	✓ (optional)
Compact and highly dynamic due to direct motor attachment	✓

Key ★☆☆☆☆ good | ★★★★★ excellent
€ Economy | €€€€€ Premium

Technical data

i	16 – 555
M_{2acc}	89 – 7500 Nm
$\Delta\phi_2$	1.5 – 4.5 arcmin
η_{get}	92 – 93 %

13.2 Selection tables

The technical data specified in the selection tables applies to:

- Installation altitudes up to 1000 m above sea level
- Surrounding temperatures from 0 °C to 40 °C
- Drives with convection-cooled motors (e.g. EZ401**U**)

For the technical data on drives with forced ventilated motors (e.g. EZ401**B**), refer to http://configurator.stoeber.de.

An explanation of the formula symbols can be found in Chapter [▶ 23.1].

n_{2N} [rpm]	M_{2N} [Nm]	$M_{2,0}$ [Nm]	a_{th}	S	Type	M_{2acc} [Nm]	M_{2accHT} [Nm]	M_{2NOT} [Nm]	i	i_{exakt}	n_{1maxDB} EL1,2 [rpm]	n_{1maxDB} EL3,4,5,6 [rpm]	n_{1maxZB} [rpm]	J_1 [kgcm²]	$\Delta\varphi_2$ [arcmin]	$\Delta\varphi_{2red}$ [arcmin]	C_2 [Nm/arcmin]	m [kg]
PH531K (n_{1N} = 3000 rpm, $M_{2acc,max}$ = 390 Nm)																		
13	203	208	12	1.1	PH531_0050K102_0470 EZ301U	390	400	710	234.6	11495/49	4000	4000	7000	0.22	4.0	2.0	62	17
17	152	155	11	1.4	PH531_0050K102_0350 EZ301U	390	400	710	175.5	3686/21	4000	4000	7000	0.23	4.0	2.0	62	17
21	121	124	10	1.8	PH531_0050K102_0280 EZ301U	370	370	710	140.2	2945/21	4000	4000	7000	0.26	4.0	2.0	62	17
21	208	219	17	1.1	PH531_0050K102_0280 EZ302U	390	400	710	140.2	2945/21	4000	4000	7000	0.36	4.0	2.0	62	18
26	101	103	9.7	2.2	PH531_0050K102_0230 EZ301U	300	300	710	116.3	5700/49	4000	4000	7000	0.28	4.0	2.0	62	17
26	172	182	17	1.3	PH531_0050K102_0230 EZ302U	390	400	710	116.3	5700/49	4000	4000	7000	0.38	4.0	2.0	62	18
34	76	78	9.1	2.9	PH531_0050K102_0175 EZ301U	230	230	670	87.82	10450/119	4000	3800	6000	0.32	4.0	2.0	62	17
34	130	137	16	1.7	PH531_0050K102_0175 EZ302U	390	400	670	87.82	10450/119	4000	3800	6000	0.42	4.0	2.0	62	18
34	169	179	20	1.3	PH531_0050K102_0175 EZ303U	390	400	670	87.82	10450/119	4000	3800	6000	0.53	4.0	2.0	62	18
43	61	62	8.6	3.6	PH531_0050K102_0140 EZ301U	180	180	530	70.57	494/7	4000	3800	6000	0.37	4.0	2.0	62	17
43	104	110	15	2.1	PH531_0050K102_0140 EZ302U	330	330	530	70.57	494/7	4000	3800	6000	0.47	4.0	2.0	62	18
43	136	144	19	1.6	PH531_0050K102_0140 EZ303U	390	390	530	70.57	494/7	4000	3800	6000	0.58	4.0	2.0	62	18
43	184	197	26	1.2	PH531_0050K102_0140 EZ401U	390	400	710	70.57	494/7	4000	3800	6000	1.1	4.0	2.0	62	20
52	50	51	8.2	4.4	PH531_0050K102_0115 EZ301U	150	150	440	57.83	1330/23	3600	3300	5500	0.44	4.0	2.0	62	17
52	86	90	14	2.6	PH531_0050K102_0115 EZ302U	270	270	440	57.83	1330/23	3600	3300	5500	0.54	4.0	2.0	62	18
52	111	118	18	2.0	PH531_0050K102_0115 EZ303U	320	320	440	57.83	1330/23	3600	3300	5500	0.65	4.0	2.0	62	18
52	151	162	25	1.5	PH531_0050K102_0115 EZ401U	390	400	710	57.83	1330/23	3600	3300	5500	1.2	4.0	2.0	62	20
65	68	72	13	3.2	PH531_0050K102_0092 EZ302U	220	220	350	46.25	8740/189	3600	3300	5500	0.63	4.0	2.0	62	18
65	89	94	17	2.5	PH531_0050K102_0092 EZ303U	260	260	350	46.25	8740/189	3600	3300	5500	0.74	4.0	2.0	62	18
65	121	129	23	1.8	PH531_0050K102_0092 EZ401U	370	370	710	46.25	8740/189	3600	3300	5500	1.3	4.0	2.0	62	20
65	185	202	36	1.2	PH531_0050K102_0092 EZ501U	390	400	710	46.25	8740/189	3600	3300	5500	3.2	4.0	2.0	62	21
65	202	224	39	1.1	PH531_0050K102_0092 EZ402U	390	400	710	46.25	8740/189	3600	3300	5500	2.0	4.0	2.0	62	21
72	62	65	13	3.6	PH531_0050K102_0083 EZ302U	190	190	310	41.55	1911/46	3600	3300	5500	0.59	4.0	2.0	62	18
72	80	85	17	2.7	PH531_0050K102_0083 EZ303U	230	230	310	41.55	1911/46	3600	3300	5500	0.70	4.0	2.0	62	18
72	108	116	23	2.0	PH531_0050K102_0083 EZ401U	330	330	710	41.55	1911/46	3600	3300	5500	1.2	4.0	2.0	62	20
72	166	182	35	1.3	PH531_0050K102_0083 EZ501U	390	400	710	41.55	1911/46	3600	3300	5500	3.2	4.0	2.0	62	21
72	182	201	38	1.2	PH531_0050K102_0083 EZ402U	390	400	710	41.55	1911/46	3600	3300	5500	1.9	4.0	2.0	62	21
90	49	52	14	3.8	PH531_0050K102_0066 EZ302U	150	150	250	33.22	299/9	3600	3300	5500	0.71	4.0	2.0	62	18
90	64	68	19	2.9	PH531_0050K102_0066 EZ303U	190	190	250	33.22	299/9	3600	3300	5500	0.82	4.0	2.0	62	18
90	87	93	21	2.5	PH531_0050K102_0066 EZ401U	260	260	710	33.22	299/9	3600	3300	5500	1.4	4.0	2.0	62	20
90	133	145	33	1.7	PH531_0050K102_0066 EZ501U	390	400	710	33.22	299/9	3600	3300	5500	3.3	4.0	2.0	62	21
90	145	161	36	1.5	PH531_0050K102_0066 EZ402U	390	400	710	33.22	299/9	3600	3300	5500	2.1	4.0	2.0	62	21
90	213	266	53	1.0	PH531_0050K102_0066 EZ404U	390	400	710	33.22	299/9	3600	3300	5500	3.4	4.0	2.0	62	23
100	78	84	21	2.8	PH531_0050K102_0060 EZ401U	240	240	710	30.00	30/1	3300	2800	5000	1.4	4.0	2.0	62	20
100	120	131	32	1.8	PH531_0050K102_0060 EZ501U	390	400	710	30.00	30/1	3300	2800	5000	3.4	4.0	2.0	62	21
100	131	145	35	1.7	PH531_0050K102_0060 EZ402U	390	400	710	30.00	30/1	3300	2800	5000	2.1	4.0	2.0	62	21
100	193	240	51	1.1	PH531_0050K102_0060 EZ404U	390	400	710	30.00	30/1	3300	2800	5000	3.5	4.0	2.0	62	23
100	207	223	55	1.1	PH531_0050K102_0060 EZ502U	390	400	710	30.00	30/1	3300	2800	5000	5.7	4.0	2.0	62	22
100	207	232	55	1.1	PH531_0050K102_0060 EZ701U	390	400	710	30.00	30/1	3300	2800	5000	9.0	4.0	2.0	62	24
108	41	44	16	3.8	PH531_0050K102_0056 EZ302U	130	130	210	27.84	7600/273	3300	2800	5000	0.98	4.0	2.0	62	18
108	54	57	21	2.9	PH531_0050K102_0056 EZ303U	160	160	210	27.84	7600/273	3300	2800	5000	1.1	4.0	2.0	62	18
108	73	78	20	3.0	PH531_0050K102_0056 EZ401U	220	220	710	27.84	7600/273	3300	2800	5000	1.6	4.0	2.0	62	20
108	111	122	31	2.0	PH531_0050K102_0056 EZ501U	390	400	710	27.84	7600/273	3300	2800	5000	3.6	4.0	2.0	62	21
108	122	135	34	1.8	PH531_0050K102_0056 EZ402U	390	400	710	27.84	7600/273	3300	2800	5000	2.3	4.0	2.0	62	21
108	179	223	50	1.2	PH531_0050K102_0056 EZ404U	390	400	710	27.84	7600/273	3300	2800	5000	3.7	4.0	2.0	62	23
108	192	207	54	1.1	PH531_0050K102_0056 EZ502U	390	400	710	27.84	7600/273	3300	2800	5000	5.9	4.0	2.0	62	22
108	192	215	54	1.1	PH531_0050K102_0056 EZ701U	390	400	710	27.84	7600/273	3300	2800	5000	9.2	4.0	2.0	62	24
150	39	41	27	2.9	PH531_0050K102_0040 EZ303U	110	110	150	20.00	20/1	3300	2800	5000	1.3	4.0	2.0	62	18
150	52	56	19	4.2	PH531_0050K102_0040 EZ401U	160	160	610	20.00	20/1	3300	2800	5000	1.9	4.0	2.0	62	20
150	80	88	29	2.7	PH531_0050K102_0040 EZ501U	300	300	610	20.00	20/1	3300	2800	5000	3.8	4.0	2.0	62	21
150	88	97	32	2.5	PH531_0050K102_0040 EZ402U	300	300	610	20.00	20/1	3300	2800	5000	2.6	4.0	2.0	62	21
150	129	160	46	1.7	PH531_0050K102_0040 EZ404U	390	400	610	20.00	20/1	3300	2800	5000	3.9	4.0	2.0	62	23

n_{2N} [rpm]	M_{2N} [Nm]	$M_{2,0}$ [Nm]	a_{th}	S	Type	M_{2acc} [Nm]	M_{2accHT} [Nm]	M_{2NOT} [Nm]	i	i_{exakt}	n_{1maxDB} EL1,2 [rpm]	n_{1maxDB} EL3,4,5,6 [rpm]	n_{1maxZB} [rpm]	J_1 [kgcm²]	$\Delta\varphi_2$ [arcmin]	$\Delta\varphi_{2red}$ [arcmin]	C_2 [Nm/arcmin]	m [kg]
PH531K (n_{1N} = 3000 rpm, $M_{2acc,max}$ = 390 Nm)																		
150	138	149	50	1.6	PH531_0050K102_0040 EZ502U	390	400	610	20.00	20/1	3300	2800	5000	6.1	4.0	2.0	62	22
150	138	155	50	1.6	PH531_0050K102_0040 EZ701U	370	370	610	20.00	20/1	3300	2800	5000	9.4	4.0	2.0	62	24
150	181	207	65	1.2	PH531_0050K102_0040 EZ503U	390	400	610	20.00	20/1	3300	2800	5000	8.5	4.0	2.0	62	24
188	31	33	27	2.9	PH531_0040K102_0040 EZ303U	89	89	120	16.00	16/1	3300	2800	5000	1.4	4.5	2.5	52	18
188	42	45	17	4.8	PH531_0040K102_0040 EZ401U	130	130	490	16.00	16/1	3300	2800	5000	1.9	4.5	2.5	52	20
188	64	70	26	3.1	PH531_0040K102_0040 EZ501U	240	240	490	16.00	16/1	3300	2800	5000	3.9	4.5	2.5	52	21
188	70	77	28	2.8	PH531_0040K102_0040 EZ402U	240	240	490	16.00	16/1	3300	2800	5000	2.6	4.5	2.5	52	21
188	103	128	41	1.9	PH531_0040K102_0040 EZ404U	360	360	490	16.00	16/1	3300	2800	5000	3.9	4.5	2.5	52	23
188	110	119	44	1.8	PH531_0040K102_0040 EZ502U	360	360	490	16.00	16/1	3300	2800	5000	6.2	4.5	2.5	52	22
188	110	124	44	1.8	PH531_0040K102_0040 EZ701U	300	300	490	16.00	16/1	3300	2800	5000	9.5	4.5	2.5	52	24
188	145	165	58	1.4	PH531_0040K102_0040 EZ503U	360	360	490	16.00	16/1	3300	2800	5000	8.5	4.5	2.5	52	24
PH531K (n_{1N} = 6000 rpm, $M_{2acc,max}$ = 390 Nm)																		
26	194	208	11	1.1	PH531_0050K102_0470 EZ301U	390	400	710	234.6	11495/49	4000	4000	7000	0.22	4.0	2.0	62	17
34	145	155	10	1.5	PH531_0050K102_0350 EZ301U	390	400	710	175.5	3686/21	4000	4000	7000	0.23	4.0	2.0	62	17
43	116	124	9.8	1.9	PH531_0050K102_0280 EZ301U	370	370	710	140.2	2945/21	4000	4000	7000	0.26	4.0	2.0	62	17
43	196	219	16	1.1	PH531_0050K102_0280 EZ302U	390	400	710	140.2	2945/21	4000	4000	7000	0.36	4.0	2.0	62	18
52	96	103	9.3	2.3	PH531_0050K102_0230 EZ301U	300	300	710	116.3	5700/49	4000	4000	7000	0.28	4.0	2.0	62	17
52	162	182	16	1.4	PH531_0050K102_0230 EZ302U	390	400	710	116.3	5700/49	4000	4000	7000	0.38	4.0	2.0	62	18
52	212	244	21	1.0	PH531_0050K102_0230 EZ303U	390	400	710	116.3	5700/49	4000	4000	7000	0.49	4.0	2.0	62	18
68	73	78	8.7	3.0	PH531_0050K102_0175 EZ301U	230	230	670	87.82	10450/119	4000	3800	6000	0.32	4.0	2.0	62	17
68	123	137	15	1.8	PH531_0050K102_0175 EZ302U	390	400	670	87.82	10450/119	4000	3800	6000	0.42	4.0	2.0	62	18
68	160	184	19	1.4	PH531_0050K102_0175 EZ303U	390	400	670	87.82	10450/119	4000	3800	6000	0.53	4.0	2.0	62	18
68	188	229	22	1.2	PH531_0050K102_0175 EZ401U	390	400	710	87.82	10450/119	4000	3800	6000	1.1	4.0	2.0	62	20
85	58	62	8.2	3.8	PH531_0050K102_0140 EZ301U	180	180	530	70.57	494/7	4000	3800	6000	0.37	4.0	2.0	62	17
85	99	110	14	2.2	PH531_0050K102_0140 EZ302U	330	330	530	70.57	494/7	4000	3800	6000	0.47	4.0	2.0	62	18
85	129	148	18	1.7	PH531_0050K102_0140 EZ303U	390	390	530	70.57	494/7	4000	3800	6000	0.58	4.0	2.0	62	18
85	151	184	21	1.5	PH531_0050K102_0140 EZ401U	390	400	710	70.57	494/7	4000	3800	6000	1.1	4.0	2.0	62	20
PH731K (n_{1N} = 3000 rpm, $M_{2acc,max}$ = 880 Nm)																		
7.6	340	347	8.5	1.3	PH731_0070K102_0560 EZ301U	690	690	1250	392.7	1178/3	4000	4000	7000	0.21	4.0	2.0	111	22
8.5	304	311	14	1.2	PH731_0100K102_0350 EZ301U	580	580	1150	351.1	7372/21	4000	4000	7000	0.23	3.5	1.5	105	22
9.1	284	291	8.1	1.5	PH731_0070K102_0470 EZ301U	820	820	1480	328.4	2299/7	4000	4000	7000	0.22	4.0	2.0	111	22
11	244	250	8.3	1.7	PH731_0070K102_0400 EZ301U	500	500	900	282.1	2821/10	4000	4000	7000	0.21	4.0	2.0	111	22
11	243	248	13	1.4	PH731_0100K102_0280 EZ301U	580	580	1150	280.5	5890/21	4000	4000	7000	0.26	3.5	1.5	105	22
11	411	434	11	1.1	PH731_0050K202_0560 EZ302U	880	910	1420	277.7	6665/24	4000	3900	6500	0.34	4.0	2.0	117	30
12	213	217	7.5	2.1	PH731_0070K102_0350 EZ301U	640	640	1430	245.7	3686/15	4000	4000	7000	0.23	4.0	2.0	111	22
12	364	384	13	1.2	PH731_0070K102_0350 EZ302U	870	870	1430	245.7	3686/15	4000	4000	7000	0.33	4.0	2.0	111	23
13	204	209	7.5	2.2	PH731_0070K102_0340 EZ301U	590	590	1060	235.9	4719/20	4000	4000	7000	0.22	4.0	2.0	111	22
13	349	369	13	1.3	PH731_0070K102_0340 EZ302U	590	590	1060	235.9	4719/20	4000	4000	7000	0.32	4.0	2.0	111	23
13	201	206	12	1.7	PH731_0100K102_0230 EZ301U	580	580	1150	232.7	11400/49	4000	4000	7000	0.28	3.5	1.5	105	22
13	344	364	21	1.0	PH731_0100K102_0230 EZ302U	580	580	1150	232.7	11400/49	4000	4000	7000	0.38	3.5	1.5	105	23
13	342	362	11	1.3	PH731_0050K202_0460 EZ302U	880	920	1340	231.1	1849/8	4000	3900	6500	0.36	4.0	2.0	117	30
15	170	174	7.1	2.6	PH731_0070K102_0280 EZ301U	510	510	1230	196.3	589/3	4000	4000	7000	0.26	4.0	2.0	111	22
15	291	307	12	1.5	PH731_0070K102_0280 EZ302U	870	870	1230	196.3	589/3	4000	4000	7000	0.36	4.0	2.0	111	23
15	378	400	16	1.2	PH731_0070K102_0280 EZ303U	870	870	1230	196.3	589/3	4000	4000	7000	0.47	4.0	2.0	111	23
17	153	156	6.9	2.9	PH731_0070K102_0250 EZ301U	460	460	1030	176.5	8827/50	4000	4000	7000	0.24	4.0	2.0	111	22
17	261	276	12	1.7	PH731_0070K102_0250 EZ302U	760	760	1030	176.5	8827/50	4000	4000	7000	0.34	4.0	2.0	111	23
17	340	360	15	1.3	PH731_0070K102_0250 EZ303U	760	760	1030	176.5	8827/50	4000	4000	7000	0.45	4.0	2.0	111	23
17	256	270	10	1.7	PH731_0050K202_0350 EZ302U	800	800	1120	172.8	9675/56	4000	3900	6500	0.42	4.0	2.0	117	30
17	333	352	13	1.3	PH731_0050K202_0350 EZ303U	820	820	1120	172.8	9675/56	4000	3900	6500	0.53	4.0	2.0	117	31
18	141	144	6.8	3.1	PH731_0070K102_0230 EZ301U	420	420	1160	162.9	1140/7	4000	4000	7000	0.28	4.0	2.0	111	22
18	241	255	12	1.8	PH731_0070K102_0230 EZ302U	760	760	1160	162.9	1140/7	4000	4000	7000	0.38	4.0	2.0	111	23
18	314	332	15	1.4	PH731_0070K102_0230 EZ303U	860	860	1160	162.9	1140/7	4000	4000	7000	0.49	4.0	2.0	111	23
18	425	455	21	1.0	PH731_0070K102_0230 EZ401U	870	870	1550	162.9	1140/7	4000	4000	7000	1.0	4.0	2.0	111	25
21	122	125	6.6	3.6	PH731_0070K102_0200 EZ301U	370	370	880	141.1	2821/20	4000	4000	7000	0.27	4.0	2.0	111	22
21	209	221	11	2.1	PH731_0070K102_0200 EZ302U	650	650	880	141.1	2821/20	4000	4000	7000	0.37	4.0	2.0	111	23
21	272	288	15	1.6	PH731_0070K102_0200 EZ303U	650	650	880	141.1	2821/20	4000	4000	7000	0.48	4.0	2.0	111	23
21	368	394	20	1.2	PH731_0070K102_0200 EZ401U	840	840	1550	141.1	2821/20	4000	4000	7000	1.0	4.0	2.0	111	25
21	364	390	17	1.2	PH731_0050K202_0280 EZ401U	880	920	1720	139.8	559/4	4000	3900	6500	1.1	4.0	2.0	117	32
24	106	109	6.3	4.1	PH731_0070K102_0175 EZ301U	320	320	930	122.9	2090/17	4000	3800	6000	0.33	4.0	2.0	111	22
24	182	192	11	2.4	PH731_0070K102_0175 EZ302U	570	570	930	122.9	2090/17	4000	3800	6000	0.43	4.0	2.0	111	23
24	237	251	14	1.9	PH731_0070K102_0175 EZ303U	690	690	930	122.9	2090/17	4000	3800	6000	0.54	4.0	2.0	111	23
24	321	343	19	1.4	PH731_0070K102_0175 EZ401U	870	870	1550	122.9	2090/17	4000	3800	6000	1.1	4.0	2.0	111	25
26	101	104	6.3	4.3	PH731_0070K102_0165 EZ301U	310	310	830	117.0	117/1	4000	4000	7000	0.29	4.0	2.0	111	22
26	173	183	11	2.5	PH731_0070K102_0165 EZ302U	540	540	830	117.0	117/1	4000	4000	7000	0.39	4.0	2.0	111	23

n_{2N} [rpm]	M_{2N} [Nm]	$M_{2,0}$ [Nm]	a_{th}	S	Type	M_{2acc} [Nm]	M_{2accHT} [Nm]	M_{2NOT} [Nm]	i	i_{exakt}	n_{1maxDB} EL1,2 [rpm]	n_{1maxDB} EL3,4,5,6 [rpm]	n_{1maxZB} [rpm]	J_1 [kgcm²]	$\Delta\varphi_2$ [arcmin]	$\Delta\varphi_{2red}$ [arcmin]	C_2 [Nm/arcmin]	m [kg]
PH731K (n_{1N} = 3000 rpm, $M_{2acc,max}$ = 880 Nm)																		
26	226	239	14	2.0	PH731_0070K102_0165 EZ303U	610	610	830	117.0	117/1	4000	4000	7000	0.50	4.0	2.0	111	23
26	305	327	19	1.4	PH731_0070K102_0165 EZ401U	840	840	1550	117.0	117/1	4000	4000	7000	1.0	4.0	2.0	111	25
26	172	181	9.2	2.6	PH731_0050K202_0230 EZ302U	540	540	880	115.9	14835/128	4000	3900	6500	0.53	4.0	2.0	117	30
26	223	236	12	2.0	PH731_0050K202_0230 EZ303U	650	650	880	115.9	14835/128	4000	3900	6500	0.64	4.0	2.0	117	31
26	302	324	16	1.5	PH731_0050K202_0230 EZ401U	880	920	1720	115.9	14835/128	4000	3900	6500	1.2	4.0	2.0	117	32
26	100	102	10	3.5	PH731_0100K102_0115 EZ301U	300	300	880	115.7	2660/23	3600	3300	5500	0.43	3.5	1.5	105	22
26	171	181	18	2.0	PH731_0100K102_0115 EZ302U	540	540	880	115.7	2660/23	3600	3300	5500	0.53	3.5	1.5	105	23
26	223	236	23	1.6	PH731_0100K102_0115 EZ303U	580	580	880	115.7	2660/23	3600	3300	5500	0.64	3.5	1.5	105	23
26	302	323	31	1.2	PH731_0100K102_0115 EZ401U	580	580	1150	115.7	2660/23	3600	3300	5500	1.2	3.5	1.5	105	25
30	146	155	10	3.0	PH731_0070K102_0140 EZ302U	460	460	750	98.80	494/5	4000	3800	6000	0.48	4.0	2.0	111	23
30	190	201	13	2.3	PH731_0070K102_0140 EZ303U	550	550	750	98.80	494/5	4000	3800	6000	0.59	4.0	2.0	111	23
30	258	276	18	1.7	PH731_0070K102_0140 EZ401U	780	780	1550	98.80	494/5	4000	3800	6000	1.1	4.0	2.0	111	25
30	396	432	28	1.1	PH731_0070K102_0140 EZ501U	870	870	1550	98.80	494/5	4000	3800	6000	3.1	4.0	2.0	111	26
30	432	478	30	1.0	PH731_0070K102_0140 EZ402U	870	870	1550	98.80	494/5	4000	3800	6000	1.8	4.0	2.0	111	26
32	137	145	17	2.6	PH731_0100K102_0092 EZ302U	430	430	700	92.49	17480/189	3600	3300	5500	0.63	3.5	1.5	105	23
32	178	189	22	2.0	PH731_0100K102_0092 EZ303U	520	520	700	92.49	17480/189	3600	3300	5500	0.74	3.5	1.5	105	23
32	241	258	29	1.5	PH731_0100K102_0092 EZ401U	580	580	1150	92.49	17480/189	3600	3300	5500	1.3	3.5	1.5	105	25
34	131	138	10	3.4	PH731_0070K102_0125 EZ302U	410	410	670	88.33	3003/34	4000	3800	6000	0.45	4.0	2.0	111	23
34	170	180	13	2.6	PH731_0070K102_0125 EZ303U	490	490	670	88.33	3003/34	4000	3800	6000	0.56	4.0	2.0	111	23
34	230	247	18	1.9	PH731_0070K102_0125 EZ401U	700	700	1550	88.33	3003/34	4000	3800	6000	1.1	4.0	2.0	111	25
34	354	387	27	1.2	PH731_0070K102_0125 EZ501U	840	840	1550	88.33	3003/34	4000	3800	6000	3.1	4.0	2.0	111	26
34	387	428	30	1.1	PH731_0070K102_0125 EZ402U	840	840	1550	88.33	3003/34	4000	3800	6000	1.8	4.0	2.0	111	26
34	129	137	8.6	3.4	PH731_0050K202_0175 EZ302U	410	410	660	87.35	2795/32	3900	3500	5500	0.66	4.0	2.0	117	30
34	168	178	11	2.6	PH731_0050K202_0175 EZ303U	490	490	660	87.35	2795/32	3900	3500	5500	0.77	4.0	2.0	117	31
34	228	244	15	1.9	PH731_0050K202_0175 EZ401U	690	690	1720	87.35	2795/32	3900	3500	5500	1.3	4.0	2.0	117	32
34	350	382	23	1.3	PH731_0050K202_0175 EZ501U	880	920	1720	87.35	2795/32	3900	3500	5500	3.3	4.0	2.0	117	33
34	382	423	25	1.2	PH731_0050K202_0175 EZ402U	880	920	1720	87.35	2795/32	3900	3500	5500	2.0	4.0	2.0	117	33
36	123	130	16	2.8	PH731_0100K102_0083 EZ302U	390	390	630	83.09	1911/23	3600	3300	5500	0.59	3.5	1.5	105	23
36	160	169	21	2.2	PH731_0100K102_0083 EZ303U	460	460	630	83.09	1911/23	3600	3300	5500	0.70	3.5	1.5	105	23
36	217	232	28	1.6	PH731_0100K102_0083 EZ401U	580	580	1150	83.09	1911/23	3600	3300	5500	1.2	3.5	1.5	105	25
36	333	364	44	1.1	PH731_0100K102_0083 EZ501U	580	580	1150	83.09	1911/23	3600	3300	5500	3.2	3.5	1.5	105	26
37	120	127	9.8	3.7	PH731_0070K102_0115 EZ302U	380	380	610	80.96	1862/23	3600	3300	5500	0.54	4.0	2.0	111	23
37	156	165	13	2.8	PH731_0070K102_0115 EZ303U	450	450	610	80.96	1862/23	3600	3300	5500	0.65	4.0	2.0	111	23
37	211	226	17	2.1	PH731_0070K102_0115 EZ401U	640	640	1550	80.96	1862/23	3600	3300	5500	1.2	4.0	2.0	111	25
37	324	354	26	1.4	PH731_0070K102_0115 EZ501U	870	870	1550	80.96	1862/23	3600	3300	5500	3.1	4.0	2.0	111	26
37	354	392	29	1.2	PH731_0070K102_0115 EZ402U	870	870	1550	80.96	1862/23	3600	3300	5500	1.9	4.0	2.0	111	26
42	105	111	10	3.8	PH731_0070K102_0100 EZ302U	330	330	540	70.98	3549/50	4000	3800	6000	0.52	4.0	2.0	111	23
42	137	145	14	2.9	PH731_0070K102_0100 EZ303U	400	400	540	70.98	3549/50	4000	3800	6000	0.63	4.0	2.0	111	23
42	185	198	17	2.4	PH731_0070K102_0100 EZ401U	560	560	1550	70.98	3549/50	4000	3800	6000	1.2	4.0	2.0	111	25
42	284	311	26	1.5	PH731_0070K102_0100 EZ501U	840	840	1550	70.98	3549/50	4000	3800	6000	3.1	4.0	2.0	111	26
42	311	344	28	1.4	PH731_0070K102_0100 EZ402U	840	840	1550	70.98	3549/50	4000	3800	6000	1.9	4.0	2.0	111	26
43	181	193	14	2.4	PH731_0050K202_0140 EZ401U	550	550	1720	69.26	14405/208	3900	3500	5500	1.4	4.0	2.0	117	32
43	277	303	22	1.6	PH731_0050K202_0140 EZ501U	880	920	1720	69.26	14405/208	3900	3500	5500	3.4	4.0	2.0	117	33
43	303	335	24	1.5	PH731_0050K202_0140 EZ402U	880	920	1720	69.26	14405/208	3900	3500	5500	2.1	4.0	2.0	117	33
45	98	104	15	3.6	PH731_0100K102_0066 EZ302U	310	310	500	66.44	598/9	3600	3300	5500	0.71	3.5	1.5	105	23
45	128	135	20	2.7	PH731_0100K102_0066 EZ303U	370	370	500	66.44	598/9	3600	3300	5500	0.82	3.5	1.5	105	23
45	173	186	27	2.0	PH731_0100K102_0066 EZ401U	530	530	1150	66.44	598/9	3600	3300	5500	1.4	3.5	1.5	105	25
45	266	291	41	1.3	PH731_0100K102_0066 EZ501U	580	580	1150	66.44	598/9	3600	3300	5500	3.3	3.5	1.5	105	26
45	291	322	45	1.2	PH731_0100K102_0066 EZ402U	580	580	1150	66.44	598/9	3600	3300	5500	2.1	3.5	1.5	105	26
46	96	101	11	3.8	PH731_0070K102_0092 EZ302U	300	300	490	64.74	1748/27	3600	3300	5500	0.63	4.0	2.0	111	23
46	125	132	15	2.9	PH731_0070K102_0092 EZ303U	360	360	490	64.74	1748/27	3600	3300	5500	0.74	4.0	2.0	111	23
46	169	181	16	2.6	PH731_0070K102_0092 EZ401U	510	510	1550	64.74	1748/27	3600	3300	5500	1.3	4.0	2.0	111	25
46	259	283	25	1.7	PH731_0070K102_0092 EZ501U	870	870	1550	64.74	1748/27	3600	3300	5500	3.2	4.0	2.0	111	26
46	283	314	27	1.6	PH731_0070K102_0092 EZ402U	870	870	1550	64.74	1748/27	3600	3300	5500	2.0	4.0	2.0	111	26
46	416	518	40	1.1	PH731_0070K102_0092 EZ404U	870	870	1550	64.74	1748/27	3600	3300	5500	3.3	4.0	2.0	111	28
50	156	168	26	2.2	PH731_0100K102_0060 EZ401U	470	470	1150	60.00	60/1	3300	2800	5000	1.4	3.5	1.5	105	25
50	240	263	40	1.5	PH731_0100K102_0060 EZ501U	580	580	1150	60.00	60/1	3300	2800	5000	3.4	3.5	1.5	105	26
50	263	291	44	1.3	PH731_0100K102_0060 EZ402U	580	580	1150	60.00	60/1	3300	2800	5000	2.1	3.5	1.5	105	26
52	86	91	12	3.8	PH731_0070K102_0083 EZ302U	270	270	440	58.16	13377/230	3600	3300	5500	0.60	4.0	2.0	111	23
52	112	119	16	2.9	PH731_0070K102_0083 EZ303U	320	320	440	58.16	13377/230	3600	3300	5500	0.71	4.0	2.0	111	23
52	152	162	16	2.9	PH731_0070K102_0083 EZ401U	460	460	1550	58.16	13377/230	3600	3300	5500	1.2	4.0	2.0	111	25
52	233	255	24	1.9	PH731_0070K102_0083 EZ501U	840	840	1550	58.16	13377/230	3600	3300	5500	3.2	4.0	2.0	111	26
52	255	282	27	1.7	PH731_0070K102_0083 EZ402U	840	840	1550	58.16	13377/230	3600	3300	5500	1.9	4.0	2.0	111	26
52	374	466	39	1.2	PH731_0070K102_0083 EZ404U	840	840	1550	58.16	13377/230	3600	3300	5500	3.3	4.0	2.0	111	28

n_{2N} [rpm]	M_{2N} [Nm]	$M_{2,0}$ [Nm]	a_{th}	S	Type	M_{2acc} [Nm]	M_{2accHT} [Nm]	M_{2NOT} [Nm]	i	i_{exakt}	n_{1maxDB} EL1,2 [rpm]	n_{1maxDB} EL3,4,5,6 [rpm]	n_{1maxZB} [rpm]	J_1 [kgcm²]	$\Delta\varphi_2$ [arcmin]	$\Delta\varphi_{2red}$ [arcmin]	C_2 [Nm/arcmin]	m [kg]
PH731K (n_{1N} = 3000 rpm, $M_{2acc,max}$ = 880 Nm)																		
52	401	433	42	1.1	PH731_0070K102_0083 EZ502U	840	840	1550	58.16	13377/230	3600	3300	5500	5.5	4.0	2.0	111	27
52	401	450	42	1.1	PH731_0070K102_0083 EZ701U	840	840	1550	58.16	13377/230	3600	3300	5500	8.8	4.0	2.0	111	29
52	85	90	11	3.8	PH731_0050K202_0115 EZ302U	270	270	440	57.73	6235/108	3500	3100	5000	0.97	4.0	2.0	117	30
52	111	118	14	2.9	PH731_0050K202_0115 EZ303U	320	320	440	57.73	6235/108	3500	3100	5000	1.1	4.0	2.0	117	31
52	151	161	14	2.9	PH731_0050K202_0115 EZ401U	460	460	1720	57.73	6235/108	3500	3100	5000	1.6	4.0	2.0	117	32
52	231	253	21	1.9	PH731_0050K202_0115 EZ501U	860	860	1720	57.73	6235/108	3500	3100	5000	3.6	4.0	2.0	117	33
52	253	280	23	1.7	PH731_0050K202_0115 EZ402U	860	860	1720	57.73	6235/108	3500	3100	5000	2.3	4.0	2.0	117	33
52	371	462	34	1.2	PH731_0050K202_0115 EZ404U	880	920	1720	57.73	6235/108	3500	3100	5000	3.7	4.0	2.0	117	35
52	398	430	36	1.1	PH731_0050K202_0115 EZ502U	880	920	1720	57.73	6235/108	3500	3100	5000	5.9	4.0	2.0	117	35
52	398	446	36	1.1	PH731_0050K202_0115 EZ701U	880	920	1720	57.73	6235/108	3500	3100	5000	9.2	4.0	2.0	117	37
54	82	87	16	3.8	PH731_0100K102_0056 EZ302U	260	260	420	55.68	15200/273	3300	2800	5000	0.97	3.5	1.5	105	23
54	107	114	21	2.9	PH731_0100K102_0056 EZ303U	310	310	420	55.68	15200/273	3300	2800	5000	1.1	3.5	1.5	105	23
54	145	156	26	2.4	PH731_0100K102_0056 EZ401U	440	440	1150	55.68	15200/273	3300	2800	5000	1.6	3.5	1.5	105	25
54	223	244	40	1.6	PH731_0100K102_0056 EZ501U	580	580	1150	55.68	15200/273	3300	2800	5000	3.6	3.5	1.5	105	26
54	244	270	43	1.4	PH731_0100K102_0056 EZ402U	580	580	1150	55.68	15200/273	3300	2800	5000	2.3	3.5	1.5	105	26
65	69	73	14	3.8	PH731_0070K102_0066 EZ302U	220	220	350	46.51	2093/45	3600	3300	5500	0.73	4.0	2.0	111	23
65	90	95	19	2.9	PH731_0070K102_0066 EZ303U	260	260	350	46.51	2093/45	3600	3300	5500	0.84	4.0	2.0	111	23
65	121	130	16	3.4	PH731_0070K102_0066 EZ401U	370	370	1410	46.51	2093/45	3600	3300	5500	1.4	4.0	2.0	111	25
65	186	204	25	2.2	PH731_0070K102_0066 EZ501U	690	690	1410	46.51	2093/45	3600	3300	5500	3.3	4.0	2.0	111	26
65	204	225	27	2.0	PH731_0070K102_0066 EZ402U	690	690	1410	46.51	2093/45	3600	3300	5500	2.1	4.0	2.0	111	26
65	299	372	39	1.4	PH731_0070K102_0066 EZ404U	780	780	1410	46.51	2093/45	3600	3300	5500	3.4	4.0	2.0	111	28
65	320	346	42	1.3	PH731_0070K102_0066 EZ502U	780	780	1410	46.51	2093/45	3600	3300	5500	5.6	4.0	2.0	111	27
65	320	359	42	1.3	PH731_0070K102_0066 EZ701U	780	780	1410	46.51	2093/45	3600	3300	5500	8.9	4.0	2.0	111	29
65	120	128	13	3.7	PH731_0050K202_0092 EZ401U	360	360	1390	45.95	11395/248	3500	3100	5000	1.9	4.0	2.0	117	32
65	184	201	20	2.4	PH731_0050K202_0092 EZ501U	680	680	1390	45.95	11395/248	3500	3100	5000	3.9	4.0	2.0	117	33
65	201	223	22	2.2	PH731_0050K202_0092 EZ402U	680	680	1390	45.95	11395/248	3500	3100	5000	2.6	4.0	2.0	117	33
65	295	368	32	1.5	PH731_0050K202_0092 EZ404U	880	920	1390	45.95	11395/248	3500	3100	5000	3.9	4.0	2.0	117	35
65	317	342	34	1.4	PH731_0050K202_0092 EZ502U	880	920	1390	45.95	11395/248	3500	3100	5000	6.2	4.0	2.0	117	35
65	317	355	34	1.4	PH731_0050K202_0092 EZ701U	860	860	1720	45.95	11395/248	3500	3100	5000	9.5	4.0	2.0	117	37
65	415	475	45	1.1	PH731_0050K202_0092 EZ503U	880	920	1390	45.95	11395/248	3500	3100	5000	8.5	4.0	2.0	117	36
71	110	117	16	3.6	PH731_0070K102_0060 EZ401U	330	330	1270	42.00	42/1	3300	2800	5000	1.4	4.0	2.0	111	25
71	168	184	25	2.4	PH731_0070K102_0060 EZ501U	630	630	1270	42.00	42/1	3300	2800	5000	3.4	4.0	2.0	111	26
71	184	203	27	2.2	PH731_0070K102_0060 EZ402U	630	630	1270	42.00	42/1	3300	2800	5000	2.1	4.0	2.0	111	26
71	270	336	40	1.5	PH731_0070K102_0060 EZ404U	750	750	1270	42.00	42/1	3300	2800	5000	3.5	4.0	2.0	111	28
71	289	313	43	1.4	PH731_0070K102_0060 EZ502U	750	750	1270	42.00	42/1	3300	2800	5000	5.7	4.0	2.0	111	27
71	289	325	43	1.4	PH731_0070K102_0060 EZ701U	750	750	1270	42.00	42/1	3300	2800	5000	9.0	4.0	2.0	111	29
71	379	434	56	1.0	PH731_0070K102_0060 EZ503U	750	750	1270	42.00	42/1	3300	2800	5000	8.1	4.0	2.0	111	29
71	81	86	17	2.9	PH731_0050K202_0084 EZ303U	230	230	320	41.99	12470/297	3500	3100	5000	1.2	4.0	2.0	117	31
71	109	117	13	4.0	PH731_0050K202_0084 EZ401U	330	330	1270	41.99	12470/297	3500	3100	5000	1.7	4.0	2.0	117	32
71	168	184	19	2.6	PH731_0050K202_0084 EZ501U	630	630	1270	41.99	12470/297	3500	3100	5000	3.7	4.0	2.0	117	33
71	184	203	21	2.4	PH731_0050K202_0084 EZ402U	630	630	1270	41.99	12470/297	3500	3100	5000	2.4	4.0	2.0	117	33
71	270	336	31	1.6	PH731_0050K202_0084 EZ404U	880	920	1270	41.99	12470/297	3500	3100	5000	3.8	4.0	2.0	117	35
71	289	313	33	1.5	PH731_0050K202_0084 EZ502U	880	920	1270	41.99	12470/297	3500	3100	5000	6.0	4.0	2.0	117	35
71	289	325	33	1.5	PH731_0050K202_0084 EZ701U	780	780	1720	41.99	12470/297	3500	3100	5000	9.3	4.0	2.0	117	37
71	379	434	44	1.2	PH731_0050K202_0084 EZ503U	880	920	1270	41.99	12470/297	3500	3100	5000	8.4	4.0	2.0	117	36
75	77	82	27	2.9	PH731_0100K102_0040 EZ303U	220	220	300	40.00	40/1	3300	2800	5000	1.3	3.5	1.5	105	23
75	104	112	24	3.4	PH731_0100K102_0040 EZ401U	320	320	1150	40.00	40/1	3300	2800	5000	1.8	3.5	1.5	105	25
75	160	175	36	2.2	PH731_0100K102_0040 EZ501U	580	580	1150	40.00	40/1	3300	2800	5000	3.8	3.5	1.5	105	26
75	175	194	40	2.0	PH731_0100K102_0040 EZ402U	580	580	1150	40.00	40/1	3300	2800	5000	2.5	3.5	1.5	105	26
75	257	320	58	1.4	PH731_0100K102_0040 EZ404U	580	580	1150	40.00	40/1	3300	2800	5000	3.9	3.5	1.5	105	28
75	276	298	63	1.3	PH731_0100K102_0040 EZ502U	580	580	1150	40.00	40/1	3300	2800	5000	6.1	3.5	1.5	105	27
75	276	309	63	1.3	PH731_0100K102_0040 EZ701U	580	580	1150	40.00	40/1	3300	2800	5000	9.4	3.5	1.5	105	29
77	58	61	16	3.8	PH731_0070K102_0056 EZ302U	180	180	300	38.98	1520/39	3300	2800	5000	1.0	4.0	2.0	111	23
77	75	79	21	2.9	PH731_0070K102_0056 EZ303U	220	220	300	38.98	1520/39	3300	2800	5000	1.1	4.0	2.0	111	23
77	102	109	16	3.8	PH731_0070K102_0056 EZ401U	310	310	1180	38.98	1520/39	3300	2800	5000	1.6	4.0	2.0	111	25
77	156	171	25	2.5	PH731_0070K102_0056 EZ501U	580	580	1180	38.98	1520/39	3300	2800	5000	3.6	4.0	2.0	111	26
77	171	189	27	2.3	PH731_0070K102_0056 EZ402U	580	580	1180	38.98	1520/39	3300	2800	5000	2.3	4.0	2.0	111	26
77	250	312	40	1.5	PH731_0070K102_0056 EZ404U	730	730	1180	38.98	1520/39	3300	2800	5000	3.7	4.0	2.0	111	28
77	269	290	43	1.4	PH731_0070K102_0056 EZ502U	730	730	1180	38.98	1520/39	3300	2800	5000	5.9	4.0	2.0	111	27
77	269	301	43	1.4	PH731_0070K102_0056 EZ701U	730	730	1180	38.98	1520/39	3300	2800	5000	9.2	4.0	2.0	111	29
77	352	403	56	1.1	PH731_0070K102_0056 EZ503U	730	730	1180	38.98	1520/39	3300	2800	5000	8.3	4.0	2.0	111	29
90	134	146	18	3.3	PH731_0050K202_0067 EZ501U	500	500	1010	33.42	11395/341	3500	3100	5000	4.1	4.0	2.0	117	33
90	146	162	20	3.0	PH731_0050K202_0067 EZ402U	500	500	1010	33.42	11395/341	3500	3100	5000	2.8	4.0	2.0	117	33
90	215	268	29	2.0	PH731_0050K202_0067 EZ404U	750	750	1010	33.42	11395/341	3500	3100	5000	4.1	4.0	2.0	117	35

n_{2N} [rpm]	M_{2N} [Nm]	$M_{2,0}$ [Nm]	a_{th}	S	Type	M_{2acc} [Nm]	M_{2accHT} [Nm]	M_{2NOT} [Nm]	i	i_{exakt}	n_{1maxDB} EL1,2 [rpm]	n_{1maxDB} EL3,4,5,6 [rpm]	n_{1maxZB} [rpm]	J_1 [kgcm²]	$\Delta\varphi_2$ [arcmin]	$\Delta\varphi_{2red}$ [arcmin]	C_2 [Nm/arcmin]	m [kg]
PH731K (n_{1N} = 3000 rpm, $M_{2acc,max}$ = 880 Nm)																		
90	230	249	31	1.9	PH731_0050K202_0067 EZ502U	750	750	1010	33.42	11395/341	3500	3100	5000	6.4	4.0	2.0	117	35
90	230	258	31	1.9	PH731_0050K202_0067 EZ701U	620	620	1720	33.42	11395/341	3500	3100	5000	9.7	4.0	2.0	117	37
90	302	345	41	1.5	PH731_0050K202_0067 EZ503U	750	750	1010	33.42	11395/341	3500	3100	5000	8.7	4.0	2.0	117	36
90	373	448	51	1.2	PH731_0050K202_0067 EZ702U	880	920	1720	33.42	11395/341	3500	3100	5000	15	4.0	2.0	117	39
90	420	498	57	1.0	PH731_0050K202_0067 EZ505U	880	920	1720	33.42	11395/341	3500	3100	5000	13	4.0	2.0	117	39
100	120	131	18	3.7	PH731_0050K202_0060 EZ501U	450	450	910	30.00	30/1	3000	2600	4500	4.7	4.0	2.0	117	33
100	131	145	19	3.4	PH731_0050K202_0060 EZ402U	450	450	910	30.00	30/1	3000	2600	4500	3.4	4.0	2.0	117	33
100	193	240	29	2.3	PH731_0050K202_0060 EZ404U	670	670	910	30.00	30/1	3000	2600	4500	4.7	4.0	2.0	117	35
100	207	223	31	2.1	PH731_0050K202_0060 EZ502U	670	670	910	30.00	30/1	3000	2600	4500	7.0	4.0	2.0	117	35
100	207	232	31	2.1	PH731_0050K202_0060 EZ701U	560	560	1720	30.00	30/1	3000	2600	4500	10	4.0	2.0	117	37
100	271	310	40	1.6	PH731_0050K202_0060 EZ503U	670	670	910	30.00	30/1	3000	2600	4500	9.3	4.0	2.0	117	36
100	335	402	50	1.3	PH731_0050K202_0060 EZ702U	880	920	1720	30.00	30/1	3000	2600	4500	15	4.0	2.0	117	39
100	377	447	56	1.2	PH731_0050K202_0060 EZ505U	880	920	1720	30.00	30/1	3000	2600	4500	14	4.0	2.0	117	39
107	54	57	27	2.9	PH731_0070K102_0040 EZ303U	160	160	210	28.00	28/1	3300	2800	5000	1.4	4.0	2.0	111	23
107	73	78	17	4.8	PH731_0070K102_0040 EZ401U	220	220	850	28.00	28/1	3300	2800	5000	1.9	4.0	2.0	111	25
107	112	123	26	3.1	PH731_0070K102_0040 EZ501U	420	420	850	28.00	28/1	3300	2800	5000	3.9	4.0	2.0	111	26
107	123	136	28	2.8	PH731_0070K102_0040 EZ402U	420	420	850	28.00	28/1	3300	2800	5000	2.6	4.0	2.0	111	26
107	180	224	41	1.9	PH731_0070K102_0040 EZ404U	630	630	850	28.00	28/1	3300	2800	5000	3.9	4.0	2.0	111	28
107	193	209	44	1.8	PH731_0070K102_0040 EZ502U	630	630	850	28.00	28/1	3300	2800	5000	6.2	4.0	2.0	111	27
107	193	216	44	1.8	PH731_0070K102_0040 EZ701U	520	520	850	28.00	28/1	3300	2800	5000	9.5	4.0	2.0	111	29
107	253	289	58	1.4	PH731_0070K102_0040 EZ503U	630	630	850	28.00	28/1	3300	2800	5000	8.5	4.0	2.0	111	29
116	178	200	30	2.5	PH731_0050K202_0052 EZ701U	480	480	1720	25.89	10535/407	3000	2600	4500	10	4.0	2.0	117	37
116	289	347	48	1.5	PH731_0050K202_0052 EZ702U	880	910	1720	25.89	10535/407	3000	2600	4500	15	4.0	2.0	117	39
116	325	386	54	1.4	PH731_0050K202_0052 EZ505U	880	910	1720	25.89	10535/407	3000	2600	4500	14	4.0	2.0	117	39
116	398	501	66	1.1	PH731_0050K202_0052 EZ703U	880	910	1720	25.89	10535/407	3000	2600	4500	23	4.0	2.0	117	41
150	138	155	28	3.2	PH731_0050K202_0040 EZ701U	370	370	1520	20.00	20/1	3000	2600	4500	11	4.0	2.0	117	37
150	223	268	45	2.0	PH731_0050K202_0040 EZ702U	760	760	1520	20.00	20/1	3000	2600	4500	16	4.0	2.0	117	39
150	251	298	51	1.8	PH731_0050K202_0040 EZ505U	840	840	1520	20.00	20/1	3000	2600	4500	15	4.0	2.0	117	39
150	307	387	62	1.4	PH731_0050K202_0040 EZ703U	840	840	1520	20.00	20/1	3000	2600	4500	24	4.0	2.0	117	41
188	110	124	27	3.2	PH731_0040K202_0040 EZ701U	300	300	1210	16.00	16/1	3000	2600	4500	11	4.5	2.5	100	37
188	179	215	45	2.0	PH731_0040K202_0040 EZ702U	610	610	1210	16.00	16/1	3000	2600	4500	16	4.5	2.5	100	39
188	201	238	50	1.8	PH731_0040K202_0040 EZ505U	670	670	1210	16.00	16/1	3000	2600	4500	15	4.5	2.5	100	39
188	246	310	61	1.4	PH731_0040K202_0040 EZ703U	670	670	1210	16.00	16/1	3000	2600	4500	24	4.5	2.5	100	41
PH731K (n_{1N} = 4500 rpm, $M_{2acc,max}$ = 880 Nm)																		
98	406	655	44	1.1	PH731_0050K202_0092 EZ505U	880	920	1720	45.95	11395/248	3500	3100	5000	13	4.0	2.0	117	39
107	371	598	43	1.2	PH731_0050K202_0084 EZ505U	880	920	1720	41.99	12470/297	3500	3100	5000	13	4.0	2.0	117	39
135	296	476	40	1.5	PH731_0050K202_0067 EZ505U	880	920	1720	33.42	11395/341	3500	3100	5000	13	4.0	2.0	117	39
135	377	622	51	1.2	PH731_0050K202_0067 EZ703U	880	920	1720	33.42	11395/341	3500	3100	5000	23	4.0	2.0	117	41
150	265	427	39	1.7	PH731_0050K202_0060 EZ505U	880	920	1720	30.00	30/1	3000	2600	4500	14	4.0	2.0	117	39
150	338	559	50	1.3	PH731_0050K202_0060 EZ703U	880	920	1720	30.00	30/1	3000	2600	4500	23	4.0	2.0	117	41
174	229	369	40	1.8	PH731_0050K202_0052 EZ505U	880	910	1720	25.89	10535/407	3000	2600	4500	14	4.0	2.0	117	39
174	292	482	50	1.4	PH731_0050K202_0052 EZ703U	880	910	1720	25.89	10535/407	3000	2600	4500	23	4.0	2.0	117	41
225	177	285	40	2.2	PH731_0050K202_0040 EZ505U	840	840	1520	20.00	20/1	3000	2600	4500	15	4.0	2.0	117	39
225	225	372	51	1.7	PH731_0050K202_0040 EZ703U	840	840	1520	20.00	20/1	3000	2600	4500	24	4.0	2.0	117	41
281	142	228	40	2.2	PH731_0040K202_0040 EZ505U	670	670	1210	16.00	16/1	3000	2600	4500	15	4.5	2.5	100	39
281	180	298	51	1.7	PH731_0040K202_0040 EZ703U	670	670	1210	16.00	16/1	3000	2600	4500	24	4.5	2.5	100	41
PH731K (n_{1N} = 6000 rpm, $M_{2acc,max}$ = 880 Nm)																		
15	325	347	8.1	1.4	PH731_0070K102_0560 EZ301U	690	690	1250	392.7	1178/3	4000	4000	7000	0.21	4.0	2.0	111	22
17	291	311	13	1.2	PH731_0100K102_0350 EZ301U	580	580	1150	351.1	7372/21	4000	4000	7000	0.23	3.5	1.5	105	22
18	272	291	7.8	1.6	PH731_0070K102_0470 EZ301U	820	820	1480	328.4	2299/7	4000	4000	7000	0.22	4.0	2.0	111	22
21	234	250	8.0	1.8	PH731_0070K102_0400 EZ301U	500	500	900	282.1	2821/10	4000	4000	7000	0.21	4.0	2.0	111	22
21	232	248	12	1.5	PH731_0100K102_0280 EZ301U	580	580	1150	280.5	5890/21	4000	4000	7000	0.26	3.5	1.5	105	22
22	388	434	11	1.1	PH731_0050K202_0560 EZ302U	880	910	1420	277.7	6665/24	4000	3900	6500	0.34	4.0	2.0	117	30
24	204	217	7.2	2.2	PH731_0070K102_0350 EZ301U	640	640	1430	245.7	3686/15	4000	4000	7000	0.23	4.0	2.0	111	22
24	343	384	12	1.3	PH731_0070K102_0350 EZ302U	870	870	1430	245.7	3686/15	4000	4000	7000	0.33	4.0	2.0	111	23
25	196	209	7.1	2.3	PH731_0070K102_0340 EZ301U	590	590	1060	235.9	4719/20	4000	4000	7000	0.22	4.0	2.0	111	22
25	330	369	12	1.3	PH731_0070K102_0340 EZ302U	590	590	1060	235.9	4719/20	4000	4000	7000	0.32	4.0	2.0	111	23
26	193	206	12	1.8	PH731_0100K102_0230 EZ301U	580	580	1150	232.7	11400/49	4000	4000	7000	0.28	3.5	1.5	105	22
26	325	364	20	1.1	PH731_0100K102_0230 EZ302U	580	580	1150	232.7	11400/49	4000	4000	7000	0.38	3.5	1.5	105	23
26	323	362	10	1.4	PH731_0050K202_0460 EZ302U	880	920	1340	231.1	1849/8	4000	3900	6500	0.36	4.0	2.0	117	30
26	422	484	14	1.0	PH731_0050K202_0460 EZ303U	880	920	1340	231.1	1849/8	4000	3900	6500	0.47	4.0	2.0	117	31
31	163	174	6.8	2.7	PH731_0070K102_0280 EZ301U	510	510	1230	196.3	589/3	4000	4000	7000	0.26	4.0	2.0	111	22
31	274	307	12	1.6	PH731_0070K102_0280 EZ302U	870	870	1230	196.3	589/3	4000	4000	7000	0.36	4.0	2.0	111	23
31	358	411	15	1.2	PH731_0070K102_0280 EZ303U	870	870	1230	196.3	589/3	4000	4000	7000	0.47	4.0	2.0	111	23

n_{2N} [rpm]	M_{2N} [Nm]	$M_{2,0}$ [Nm]	a_{th}	S	Type	M_{2acc} [Nm]	M_{2accHT} [Nm]	M_{2NOT} [Nm]	i	i_{exakt}	n_{1maxDB} EL1,2 [rpm]	n_{1maxDB} EL3,4,5,6 [rpm]	n_{1maxZB} [rpm]	J_1 [kgcm²]	$\Delta\varphi_2$ [arcmin]	$\Delta\varphi_{2red}$ [arcmin]	C_2 [Nm/arcmin]	m [kg]
PH731K (n_{1N} = 6000 rpm, $M_{2acc,max}$ = 880 Nm)																		
31	421	512	18	1.0	PH731_0070K102_0280 EZ401U	870	870	1550	196.3	589/3	4000	4000	7000	1.0	4.0	2.0	111	25
34	146	156	6.6	3.0	PH731_0070K102_0250 EZ301U	460	460	1030	176.5	8827/50	4000	4000	7000	0.24	4.0	2.0	111	22
34	247	276	11	1.8	PH731_0070K102_0250 EZ302U	760	760	1030	176.5	8827/50	4000	4000	7000	0.34	4.0	2.0	111	23
34	322	370	15	1.4	PH731_0070K102_0250 EZ303U	760	760	1030	176.5	8827/50	4000	4000	7000	0.45	4.0	2.0	111	23
34	378	460	17	1.2	PH731_0070K102_0250 EZ401U	770	770	1400	176.5	8827/50	4000	4000	7000	0.98	4.0	2.0	111	25
35	241	270	9.6	1.8	PH731_0050K202_0350 EZ302U	800	800	1120	172.8	9675/56	4000	3900	6500	0.42	4.0	2.0	117	30
35	315	362	13	1.4	PH731_0050K202_0350 EZ303U	820	820	1120	172.8	9675/56	4000	3900	6500	0.53	4.0	2.0	117	31
35	370	450	15	1.2	PH731_0050K202_0350 EZ401U	880	920	1720	172.8	9675/56	4000	3900	6500	1.1	4.0	2.0	117	32
37	135	144	6.5	3.3	PH731_0070K102_0230 EZ301U	420	420	1160	162.9	1140/7	4000	4000	7000	0.28	4.0	2.0	111	22
37	227	255	11	1.9	PH731_0070K102_0230 EZ302U	760	760	1160	162.9	1140/7	4000	4000	7000	0.38	4.0	2.0	111	23
37	297	341	14	1.5	PH731_0070K102_0230 EZ303U	860	860	1160	162.9	1140/7	4000	4000	7000	0.49	4.0	2.0	111	23
37	349	425	17	1.3	PH731_0070K102_0230 EZ401U	870	870	1550	162.9	1140/7	4000	4000	7000	1.0	4.0	2.0	111	25
43	117	125	6.3	3.8	PH731_0070K102_0200 EZ301U	370	370	880	141.1	2821/20	4000	4000	7000	0.27	4.0	2.0	111	22
43	197	221	11	2.2	PH731_0070K102_0200 EZ302U	650	650	880	141.1	2821/20	4000	4000	7000	0.37	4.0	2.0	111	23
43	257	296	14	1.7	PH731_0070K102_0200 EZ303U	650	650	880	141.1	2821/20	4000	4000	7000	0.48	4.0	2.0	111	23
43	302	368	16	1.5	PH731_0070K102_0200 EZ401U	840	840	1550	141.1	2821/20	4000	4000	7000	1.0	4.0	2.0	111	25
43	299	364	14	1.5	PH731_0050K202_0280 EZ401U	880	920	1720	139.8	559/4	4000	3900	6500	1.1	4.0	2.0	117	32
49	102	109	6.1	4.3	PH731_0070K102_0175 EZ301U	320	320	930	122.9	2090/17	4000	3800	6000	0.33	4.0	2.0	111	22
49	172	192	10	2.6	PH731_0070K102_0175 EZ302U	570	570	930	122.9	2090/17	4000	3800	6000	0.43	4.0	2.0	111	23
49	224	258	13	2.0	PH731_0070K102_0175 EZ303U	690	690	930	122.9	2090/17	4000	3800	6000	0.54	4.0	2.0	111	23
49	263	321	16	1.7	PH731_0070K102_0175 EZ401U	870	870	1550	122.9	2090/17	4000	3800	6000	1.1	4.0	2.0	111	25
49	389	504	23	1.1	PH731_0070K102_0175 EZ501U	870	870	1550	122.9	2090/17	4000	3800	6000	3.0	4.0	2.0	111	26
49	401	561	24	1.1	PH731_0070K102_0175 EZ402U	870	870	1550	122.9	2090/17	4000	3800	6000	1.8	4.0	2.0	111	26
51	97	104	6.0	4.5	PH731_0070K102_0165 EZ301U	310	310	830	117.0	117/1	4000	4000	7000	0.29	4.0	2.0	111	22
51	163	183	10	2.7	PH731_0070K102_0165 EZ302U	540	540	830	117.0	117/1	4000	4000	7000	0.39	4.0	2.0	111	23
51	214	245	13	2.1	PH731_0070K102_0165 EZ303U	610	610	830	117.0	117/1	4000	4000	7000	0.50	4.0	2.0	111	23
51	251	305	16	1.8	PH731_0070K102_0165 EZ401U	840	840	1550	117.0	117/1	4000	4000	7000	1.0	4.0	2.0	111	25
51	370	479	23	1.2	PH731_0070K102_0165 EZ501U	840	840	1550	117.0	117/1	4000	4000	7000	3.0	4.0	2.0	111	26
51	381	534	24	1.2	PH731_0070K102_0165 EZ402U	840	840	1550	117.0	117/1	4000	4000	7000	1.7	4.0	2.0	111	26
52	162	181	8.7	2.7	PH731_0050K202_0230 EZ302U	540	540	880	115.9	14835/128	4000	3900	6500	0.53	4.0	2.0	117	30
52	212	243	11	2.1	PH731_0050K202_0230 EZ303U	650	650	880	115.9	14835/128	4000	3900	6500	0.64	4.0	2.0	117	31
52	248	302	13	1.8	PH731_0050K202_0230 EZ401U	880	920	1720	115.9	14835/128	4000	3900	6500	1.2	4.0	2.0	117	32
52	367	475	20	1.2	PH731_0050K202_0230 EZ501U	880	920	1720	115.9	14835/128	4000	3900	6500	3.1	4.0	2.0	117	33
52	378	529	20	1.2	PH731_0050K202_0230 EZ402U	880	920	1720	115.9	14835/128	4000	3900	6500	1.9	4.0	2.0	117	33
61	138	155	10	3.0	PH731_0070K102_0140 EZ302U	460	460	750	98.80	494/5	4000	3800	6000	0.48	4.0	2.0	111	23
61	180	207	13	2.3	PH731_0070K102_0140 EZ303U	550	550	750	98.80	494/5	4000	3800	6000	0.59	4.0	2.0	111	23
61	212	258	16	2.0	PH731_0070K102_0140 EZ401U	780	780	1550	98.80	494/5	4000	3800	6000	1.1	4.0	2.0	111	25
61	313	405	23	1.3	PH731_0070K102_0140 EZ501U	870	870	1550	98.80	494/5	4000	3800	6000	3.1	4.0	2.0	111	26
61	322	451	24	1.3	PH731_0070K102_0140 EZ402U	870	870	1550	98.80	494/5	4000	3800	6000	1.8	4.0	2.0	111	26
68	123	138	10	3.3	PH731_0070K102_0125 EZ302U	410	410	670	88.33	3003/34	4000	3800	6000	0.45	4.0	2.0	111	23
68	161	185	13	2.5	PH731_0070K102_0125 EZ303U	490	490	670	88.33	3003/34	4000	3800	6000	0.56	4.0	2.0	111	23
68	189	230	16	2.1	PH731_0070K102_0125 EZ401U	700	700	1550	88.33	3003/34	4000	3800	6000	1.1	4.0	2.0	111	25
68	280	362	23	1.4	PH731_0070K102_0125 EZ501U	840	840	1550	88.33	3003/34	4000	3800	6000	3.1	4.0	2.0	111	26
68	288	403	24	1.4	PH731_0070K102_0125 EZ402U	840	840	1550	88.33	3003/34	4000	3800	6000	1.8	4.0	2.0	111	26
85	99	111	10	3.8	PH731_0070K102_0100 EZ302U	330	330	540	70.98	3549/50	4000	3800	6000	0.52	4.0	2.0	111	23
85	130	149	14	2.9	PH731_0070K102_0100 EZ303U	400	400	540	70.98	3549/50	4000	3800	6000	0.63	4.0	2.0	111	23
85	152	185	16	2.5	PH731_0070K102_0100 EZ401U	560	560	1550	70.98	3549/50	4000	3800	6000	1.2	4.0	2.0	111	25
85	225	291	24	1.7	PH731_0070K102_0100 EZ501U	840	840	1550	70.98	3549/50	4000	3800	6000	3.1	4.0	2.0	111	26
85	231	324	24	1.6	PH731_0070K102_0100 EZ402U	840	840	1550	70.98	3549/50	4000	3800	6000	1.9	4.0	2.0	111	26
85	344	516	36	1.1	PH731_0070K102_0100 EZ502U	840	840	1550	70.98	3549/50	4000	3800	6000	5.4	4.0	2.0	111	27
85	344	522	36	1.1	PH731_0070K102_0100 EZ701U	840	840	1550	70.98	3549/50	4000	3800	6000	8.7	4.0	2.0	111	29
PH831K (n_{1N} = 3000 rpm, $M_{2acc,max}$ = 1850 Nm)																		
5.4	822	869	12	1.0	PH831_0100K202_0560 EZ302U	1390	1390	2780	555.4	6665/12	4000	3900	6500	0.34	3.5	1.5	260	49
6.2	720	760	8.4	1.2	PH831_0070K202_0690 EZ302U	1070	1070	1860	486.0	46655/96	4000	3900	6500	0.33	3.5	1.5	245	49
6.5	684	723	11	1.2	PH831_0100K202_0460 EZ302U	1390	1390	2690	462.3	1849/4	4000	3900	6500	0.37	3.5	1.5	260	49
7.7	576	608	7.1	1.7	PH831_0070K202_0560 EZ302U	1280	1280	1980	388.8	9331/24	4000	3900	6500	0.35	3.5	1.5	245	49
7.7	749	793	9.2	1.3	PH831_0070K202_0560 EZ303U	1280	1280	1980	388.8	9331/24	4000	3900	6500	0.46	3.5	1.5	245	49
8.5	523	553	11	1.2	PH831_0070K202_0500 EZ302U	780	780	1350	353.4	46655/132	4000	3900	6500	0.33	3.5	1.5	245	49
8.7	512	541	11	1.7	PH831_0100K202_0350 EZ302U	1390	1390	2230	345.5	9675/28	4000	3900	6500	0.42	3.5	1.5	260	49
8.7	666	705	14	1.3	PH831_0100K202_0350 EZ303U	1390	1390	2230	345.5	9675/28	4000	3900	6500	0.53	3.5	1.5	260	49
9.3	479	506	6.8	2.1	PH831_0070K202_0460 EZ302U	1390	1390	1880	323.6	12943/40	4000	3900	6500	0.37	3.5	1.5	245	49
9.3	624	660	8.8	1.6	PH831_0070K202_0460 EZ303U	1390	1390	1880	323.6	12943/40	4000	3900	6500	0.48	3.5	1.5	245	49
9.3	844	904	12	1.2	PH831_0070K202_0460 EZ401U	1480	1480	2920	323.6	12943/40	4000	3900	6500	1.0	3.5	1.5	245	51
11	419	442	8.4	1.9	PH831_0070K202_0400 EZ302U	930	930	1440	282.8	9331/33	4000	3900	6500	0.35	3.5	1.5	245	49

n_{2N} [rpm]	M_{2N} [Nm]	$M_{2,0}$ [Nm]	a_{th}	S	Type	M_{2acc} [Nm]	M_{2accHT} [Nm]	M_{2NOT} [Nm]	i	i_{exakt}	n_{1maxDB} EL1,2 [rpm]	n_{1maxDB} EL3,4,5,6 [rpm]	n_{1maxZB} [rpm]	J_1 [kgcm²]	$\Delta\varphi_2$ [arcmin]	$\Delta\varphi_{2red}$ [arcmin]	C_2 [Nm/arcmin]	m [kg]
PH831K (n_{1N} = 3000 rpm, $M_{2acc,max}$ = 1850 Nm)																		
11	545	577	11	1.4	PH831_0070K202_0400 EZ303U	930	930	1440	282.8	9331/33	4000	3900	6500	0.46	3.5	1.5	245	49
11	729	781	18	1.2	PH831_0100K202_0280 EZ401U	1390	1390	2780	279.5	559/2	4000	3900	6500	1.1	3.5	1.5	260	51
11	726	778	8.9	1.5	PH831_0050K302_0560 EZ401U	1520	1520	2760	278.5	12255/44	3800	3500	6000	1.0	4.0	2.0	245	56
12	358	378	6.3	2.8	PH831_0070K202_0350 EZ302U	1130	1130	1560	241.9	1935/8	4000	3900	6500	0.42	3.5	1.5	245	49
12	466	493	8.2	2.1	PH831_0070K202_0350 EZ303U	1150	1150	1560	241.9	1935/8	4000	3900	6500	0.53	3.5	1.5	245	49
12	631	676	11	1.6	PH831_0070K202_0350 EZ401U	1480	1480	2920	241.9	1935/8	4000	3900	6500	1.1	3.5	1.5	245	51
12	969	1059	17	1.0	PH831_0070K202_0350 EZ501U	1480	1480	2920	241.9	1935/8	4000	3900	6500	3.0	3.5	1.5	245	52
13	348	368	6.2	2.9	PH831_0070K202_0340 EZ302U	1010	1010	1370	235.3	12943/55	4000	3900	6500	0.38	3.5	1.5	245	49
13	454	480	8.1	2.2	PH831_0070K202_0340 EZ303U	1010	1010	1370	235.3	12943/55	4000	3900	6500	0.49	3.5	1.5	245	49
13	614	657	11	1.6	PH831_0070K202_0340 EZ401U	1240	1240	2250	235.3	12943/55	4000	3900	6500	1.0	3.5	1.5	245	51
13	343	363	9.6	2.5	PH831_0100K202_0230 EZ302U	1080	1080	1760	231.8	14835/64	4000	3900	6500	0.53	3.5	1.5	260	49
13	447	473	12	1.9	PH831_0100K202_0230 EZ303U	1300	1300	1760	231.8	14835/64	4000	3900	6500	0.64	3.5	1.5	260	49
13	604	648	17	1.4	PH831_0100K202_0230 EZ401U	1390	1390	2780	231.8	14835/64	4000	3900	6500	1.2	3.5	1.5	260	51
13	603	646	8.5	1.8	PH831_0050K302_0460 EZ401U	1830	1830	3580	231.1	1849/8	3800	3500	6000	1.1	4.0	2.0	245	56
13	925	1012	13	1.2	PH831_0050K302_0460 EZ501U	1850	1850	3580	231.1	1849/8	3800	3500	6000	3.1	4.0	2.0	245	57
13	1012	1119	14	1.1	PH831_0050K302_0460 EZ402U	1850	1850	3580	231.1	1849/8	3800	3500	6000	1.8	4.0	2.0	245	57
15	510	547	10	2.0	PH831_0070K202_0280 EZ401U	1480	1480	2920	195.7	3913/20	4000	3900	6500	1.1	3.5	1.5	245	51
15	783	856	16	1.3	PH831_0070K202_0280 EZ501U	1480	1480	2920	195.7	3913/20	4000	3900	6500	3.1	3.5	1.5	245	52
15	856	947	18	1.2	PH831_0070K202_0280 EZ402U	1480	1480	2920	195.7	3913/20	4000	3900	6500	1.8	3.5	1.5	245	52
17	260	275	6.9	3.2	PH831_0070K202_0250 EZ302U	820	820	1140	175.9	1935/11	4000	3900	6500	0.44	3.5	1.5	245	49
17	339	359	9.0	2.5	PH831_0070K202_0250 EZ303U	840	840	1140	175.9	1935/11	4000	3900	6500	0.55	3.5	1.5	245	49
17	459	491	10	2.2	PH831_0070K202_0250 EZ401U	1390	1390	2920	175.9	1935/11	4000	3900	6500	1.1	3.5	1.5	245	51
17	704	770	16	1.4	PH831_0070K202_0250 EZ501U	1480	1480	2920	175.9	1935/11	4000	3900	6500	3.0	3.5	1.5	245	52
17	770	852	17	1.3	PH831_0070K202_0250 EZ402U	1480	1480	2920	175.9	1935/11	4000	3900	6500	1.8	3.5	1.5	245	52
17	259	273	8.9	3.3	PH831_0100K202_0175 EZ302U	810	810	1320	174.7	2795/16	3900	3500	5500	0.66	3.5	1.5	260	49
17	337	356	12	2.5	PH831_0100K202_0175 EZ303U	980	980	1320	174.7	2795/16	3900	3500	5500	0.77	3.5	1.5	260	49
17	455	488	16	1.9	PH831_0100K202_0175 EZ401U	1380	1380	2780	174.7	2795/16	3900	3500	5500	1.3	3.5	1.5	260	51
17	699	765	24	1.2	PH831_0100K202_0175 EZ501U	1390	1390	2780	174.7	2795/16	3900	3500	5500	3.3	3.5	1.5	260	52
17	765	846	26	1.1	PH831_0100K202_0175 EZ402U	1390	1390	2780	174.7	2795/16	3900	3500	5500	2.0	3.5	1.5	260	52
17	453	485	7.9	2.4	PH831_0050K302_0350 EZ401U	1370	1370	3650	173.7	4515/26	3800	3500	6000	1.2	4.0	2.0	245	56
17	695	760	12	1.6	PH831_0050K302_0350 EZ501U	1850	1850	3650	173.7	4515/26	3800	3500	6000	3.2	4.0	2.0	245	57
17	760	841	13	1.4	PH831_0050K302_0350 EZ402U	1850	1850	3650	173.7	4515/26	3800	3500	6000	1.9	4.0	2.0	245	57
18	240	254	6.3	3.8	PH831_0070K202_0230 EZ302U	760	760	1230	162.3	20769/128	4000	3900	6500	0.54	3.5	1.5	245	49
18	313	331	8.2	2.9	PH831_0070K202_0230 EZ303U	910	910	1230	162.3	20769/128	4000	3900	6500	0.65	3.5	1.5	245	49
18	423	453	10	2.4	PH831_0070K202_0230 EZ401U	1280	1280	2920	162.3	20769/128	4000	3900	6500	1.2	3.5	1.5	245	51
18	650	710	15	1.5	PH831_0070K202_0230 EZ501U	1480	1480	2920	162.3	20769/128	4000	3900	6500	3.2	3.5	1.5	245	52
18	710	786	17	1.4	PH831_0070K202_0230 EZ402U	1480	1480	2920	162.3	20769/128	4000	3900	6500	1.9	3.5	1.5	245	52
21	371	397	9.7	2.7	PH831_0070K202_0200 EZ401U	1130	1130	2920	142.3	7826/55	4000	3900	6500	1.1	3.5	1.5	245	51
21	570	623	15	1.8	PH831_0070K202_0200 EZ501U	1480	1480	2920	142.3	7826/55	4000	3900	6500	3.1	3.5	1.5	245	52
21	623	689	16	1.6	PH831_0070K202_0200 EZ402U	1480	1480	2920	142.3	7826/55	4000	3900	6500	1.8	3.5	1.5	245	52
21	914	1139	24	1.1	PH831_0070K202_0200 EZ404U	1480	1480	2920	142.3	7826/55	4000	3900	6500	3.2	3.5	1.5	245	54
21	980	1060	26	1.0	PH831_0070K202_0200 EZ502U	1480	1480	2920	142.3	7826/55	4000	3900	6500	5.4	3.5	1.5	245	53
21	980	1100	26	1.0	PH831_0070K202_0200 EZ701U	1480	1480	2920	142.3	7826/55	4000	3900	6500	8.7	3.5	1.5	245	55
22	364	389	7.5	3.0	PH831_0050K302_0280 EZ401U	1100	1100	3650	139.4	17845/128	3800	3500	6000	1.3	4.0	2.0	245	56
22	558	610	12	2.0	PH831_0050K302_0280 EZ501U	1850	1850	3650	139.4	17845/128	3800	3500	6000	3.3	4.0	2.0	245	57
22	610	675	13	1.8	PH831_0050K302_0280 EZ402U	1850	1850	3650	139.4	17845/128	3800	3500	6000	2.0	4.0	2.0	245	57
22	896	1116	18	1.2	PH831_0050K302_0280 EZ404U	1850	1850	3650	139.4	17845/128	3800	3500	6000	3.4	4.0	2.0	245	59
22	961	1039	20	1.1	PH831_0050K302_0280 EZ502U	1850	1850	3650	139.4	17845/128	3800	3500	6000	5.6	4.0	2.0	245	58
22	961	1078	20	1.1	PH831_0050K302_0280 EZ701U	1850	1850	3650	139.4	17845/128	3800	3500	6000	8.9	4.0	2.0	245	60
22	361	387	15	2.4	PH831_0100K202_0140 EZ401U	1100	1100	2780	138.5	14405/104	3900	3500	5500	1.5	3.5	1.5	260	51
22	555	606	23	1.5	PH831_0100K202_0140 EZ501U	1390	1390	2780	138.5	14405/104	3900	3500	5500	3.4	3.5	1.5	260	52
22	606	671	25	1.4	PH831_0100K202_0140 EZ402U	1390	1390	2780	138.5	14405/104	3900	3500	5500	2.2	3.5	1.5	260	52
25	181	191	7.8	3.8	PH831_0070K202_0175 EZ302U	570	570	930	122.3	3913/32	3900	3500	5500	0.68	3.5	1.5	245	49
25	236	249	10	2.9	PH831_0070K202_0175 EZ303U	680	680	930	122.3	3913/32	3900	3500	5500	0.79	3.5	1.5	245	49
25	319	342	9.3	3.1	PH831_0070K202_0175 EZ401U	970	970	2920	122.3	3913/32	3900	3500	5500	1.3	3.5	1.5	245	51
25	490	535	14	2.0	PH831_0070K202_0175 EZ501U	1480	1480	2920	122.3	3913/32	3900	3500	5500	3.3	3.5	1.5	245	52
25	535	592	16	1.9	PH831_0070K202_0175 EZ402U	1480	1480	2920	122.3	3913/32	3900	3500	5500	2.0	3.5	1.5	245	52
25	786	979	23	1.3	PH831_0070K202_0175 EZ404U	1480	1480	2920	122.3	3913/32	3900	3500	5500	3.4	3.5	1.5	245	54
25	843	911	25	1.2	PH831_0070K202_0175 EZ502U	1480	1480	2920	122.3	3913/32	3900	3500	5500	5.6	3.5	1.5	245	53
25	843	945	25	1.2	PH831_0070K202_0175 EZ701U	1480	1480	2920	122.3	3913/32	3900	3500	5500	8.9	3.5	1.5	245	55
25	175	185	8.0	3.8	PH831_0070K202_0170 EZ302U	550	550	890	118.0	20769/176	4000	3900	6500	0.58	3.5	1.5	245	49
25	227	241	10	2.9	PH831_0070K202_0170 EZ303U	660	660	890	118.0	20769/176	4000	3900	6500	0.69	3.5	1.5	245	49
25	308	330	9.2	3.3	PH831_0070K202_0170 EZ401U	930	930	2920	118.0	20769/176	4000	3900	6500	1.2	3.5	1.5	245	51
25	473	516	14	2.1	PH831_0070K202_0170 EZ501U	1480	1480	2920	118.0	20769/176	4000	3900	6500	3.2	3.5	1.5	245	52

n_{2N} [rpm]	M_{2N} [Nm]	$M_{2,0}$ [Nm]	a_{th}	S	Type	M_{2acc} [Nm]	M_{2accHT} [Nm]	M_{2NOT} [Nm]	i	i_{exakt}	n_{1maxDB} EL1,2 [rpm]	n_{1maxDB} EL3,4,5,6 [rpm]	n_{1maxZB} [rpm]	J_1 [kgcm²]	$\Delta\varphi_2$ [arcmin]	$\Delta\varphi_{2red}$ [arcmin]	C_2 [Nm/arcmin]	m [kg]
PH831K (n_{1N} = 3000 rpm, $M_{2acc,max}$ = 1850 Nm)																		
25	516	571	16	1.9	PH831_0070K202_0170 EZ402U	1480	1480	2920	118.0	20769/176	4000	3900	6500	1.9	3.5	1.5	245	52
25	758	945	23	1.3	PH831_0070K202_0170 EZ404U	1480	1480	2920	118.0	20769/176	4000	3900	6500	3.3	3.5	1.5	245	54
25	813	879	24	1.2	PH831_0070K202_0170 EZ502U	1480	1480	2920	118.0	20769/176	4000	3900	6500	5.5	3.5	1.5	245	53
25	813	912	24	1.2	PH831_0070K202_0170 EZ701U	1480	1480	2920	118.0	20769/176	4000	3900	6500	8.8	3.5	1.5	245	55
26	304	325	7.2	3.6	PH831_0050K302_0230 EZ401U	920	920	3360	116.5	2795/24	3800	3500	6000	1.4	4.0	2.0	245	56
26	466	510	11	2.4	PH831_0050K302_0230 EZ501U	1740	1740	3360	116.5	2795/24	3800	3500	6000	3.4	4.0	2.0	245	57
26	510	564	12	2.2	PH831_0050K302_0230 EZ402U	1740	1740	3360	116.5	2795/24	3800	3500	6000	2.1	4.0	2.0	245	57
26	748	933	18	1.5	PH831_0050K302_0230 EZ404U	1850	1850	3360	116.5	2795/24	3800	3500	6000	3.5	4.0	2.0	245	59
26	803	868	19	1.4	PH831_0050K302_0230 EZ502U	1850	1850	3360	116.5	2795/24	3800	3500	6000	5.7	4.0	2.0	245	58
26	803	900	19	1.4	PH831_0050K302_0230 EZ701U	1850	1850	3650	116.5	2795/24	3800	3500	6000	9.0	4.0	2.0	245	60
26	1052	1204	25	1.0	PH831_0050K302_0230 EZ503U	1850	1850	3360	116.5	2795/24	3800	3500	6000	8.1	4.0	2.0	245	60
26	171	181	11	3.8	PH831_0100K202_0115 EZ302U	540	540	880	115.5	6235/54	3500	3100	5000	0.98	3.5	1.5	260	49
26	223	235	14	2.9	PH831_0100K202_0115 EZ303U	650	650	880	115.5	6235/54	3500	3100	5000	1.1	3.5	1.5	260	49
26	301	323	14	2.8	PH831_0100K202_0115 EZ401U	910	910	2780	115.5	6235/54	3500	3100	5000	1.6	3.5	1.5	260	51
26	462	505	22	1.8	PH831_0100K202_0115 EZ501U	1390	1390	2780	115.5	6235/54	3500	3100	5000	3.6	3.5	1.5	260	52
26	505	559	24	1.7	PH831_0100K202_0115 EZ402U	1390	1390	2780	115.5	6235/54	3500	3100	5000	2.3	3.5	1.5	260	52
26	742	925	35	1.1	PH831_0100K202_0115 EZ404U	1390	1390	2780	115.5	6235/54	3500	3100	5000	3.7	3.5	1.5	260	54
26	796	860	37	1.1	PH831_0100K202_0115 EZ502U	1390	1390	2780	115.5	6235/54	3500	3100	5000	5.9	3.5	1.5	260	53
26	796	892	37	1.1	PH831_0100K202_0115 EZ701U	1390	1390	2780	115.5	6235/54	3500	3100	5000	9.2	3.5	1.5	260	55
31	253	271	9.4	3.7	PH831_0070K202_0140 EZ401U	770	770	2920	96.96	20167/208	3900	3500	5500	1.5	3.5	1.5	245	51
31	388	424	14	2.4	PH831_0070K202_0140 EZ501U	1440	1440	2920	96.96	20167/208	3900	3500	5500	3.4	3.5	1.5	245	52
31	424	469	16	2.2	PH831_0070K202_0140 EZ402U	1440	1440	2920	96.96	20167/208	3900	3500	5500	2.2	3.5	1.5	245	52
31	623	776	23	1.5	PH831_0070K202_0140 EZ404U	1480	1480	2920	96.96	20167/208	3900	3500	5500	3.5	3.5	1.5	245	54
31	668	722	25	1.4	PH831_0070K202_0140 EZ502U	1480	1480	2920	96.96	20167/208	3900	3500	5500	5.7	3.5	1.5	245	53
31	668	749	25	1.4	PH831_0070K202_0140 EZ701U	1480	1480	2920	96.96	20167/208	3900	3500	5500	9.0	3.5	1.5	245	55
31	876	1002	32	1.1	PH831_0070K202_0140 EZ503U	1480	1480	2920	96.96	20167/208	3900	3500	5500	8.1	3.5	1.5	245	55
33	240	257	13	3.5	PH831_0100K202_0092 EZ401U	730	730	2780	91.90	11395/124	3500	3100	5000	1.9	3.5	1.5	260	51
33	368	402	21	2.3	PH831_0100K202_0092 EZ501U	1370	1370	2780	91.90	11395/124	3500	3100	5000	3.9	3.5	1.5	260	52
33	402	445	22	2.1	PH831_0100K202_0092 EZ402U	1370	1370	2780	91.90	11395/124	3500	3100	5000	2.6	3.5	1.5	260	52
33	590	736	33	1.4	PH831_0100K202_0092 EZ404U	1390	1390	2780	91.90	11395/124	3500	3100	5000	3.9	3.5	1.5	260	54
33	633	685	35	1.3	PH831_0100K202_0092 EZ502U	1390	1390	2780	91.90	11395/124	3500	3100	5000	6.2	3.5	1.5	260	53
33	633	710	35	1.3	PH831_0100K202_0092 EZ701U	1390	1390	2780	91.90	11395/124	3500	3100	5000	9.5	3.5	1.5	260	55
33	830	950	46	1.0	PH831_0100K202_0092 EZ503U	1390	1390	2780	91.90	11395/124	3500	3100	5000	8.5	3.5	1.5	260	55
34	132	139	9.8	3.8	PH831_0070K202_0125 EZ302U	410	410	670	88.94	3913/44	3900	3500	5500	0.75	3.5	1.5	245	49
34	171	181	13	2.9	PH831_0070K202_0125 EZ303U	500	500	670	88.94	3913/44	3900	3500	5500	0.86	3.5	1.5	245	49
34	232	248	9.4	3.9	PH831_0070K202_0125 EZ401U	700	700	2700	88.94	3913/44	3900	3500	5500	1.4	3.5	1.5	245	51
34	356	389	15	2.6	PH831_0070K202_0125 EZ501U	1330	1330	2700	88.94	3913/44	3900	3500	5500	3.4	3.5	1.5	245	52
34	389	431	16	2.3	PH831_0070K202_0125 EZ402U	1330	1330	2700	88.94	3913/44	3900	3500	5500	2.1	3.5	1.5	245	52
34	571	712	23	1.6	PH831_0070K202_0125 EZ404U	1480	1480	2700	88.94	3913/44	3900	3500	5500	3.4	3.5	1.5	245	54
34	613	663	25	1.5	PH831_0070K202_0125 EZ502U	1480	1480	2700	88.94	3913/44	3900	3500	5500	5.7	3.5	1.5	245	53
34	613	687	25	1.5	PH831_0070K202_0125 EZ701U	1480	1480	2920	88.94	3913/44	3900	3500	5500	9.0	3.5	1.5	245	55
34	803	919	33	1.1	PH831_0070K202_0125 EZ503U	1480	1480	2700	88.94	3913/44	3900	3500	5500	8.0	3.5	1.5	245	55
35	225	242	6.6	4.9	PH831_0050K302_0175 EZ401U	680	680	2620	86.47	7955/92	3500	3100	5000	1.7	4.0	2.0	245	56
35	346	378	10	3.2	PH831_0050K302_0175 EZ501U	1290	1290	2620	86.47	7955/92	3500	3100	5000	3.7	4.0	2.0	245	57
35	378	419	11	2.9	PH831_0050K302_0175 EZ402U	1290	1290	2620	86.47	7955/92	3500	3100	5000	2.4	4.0	2.0	245	57
35	556	692	16	2.0	PH831_0050K302_0175 EZ404U	1850	1850	2620	86.47	7955/92	3500	3100	5000	3.8	4.0	2.0	245	59
35	596	644	18	1.8	PH831_0050K302_0175 EZ502U	1850	1850	2620	86.47	7955/92	3500	3100	5000	6.0	4.0	2.0	245	58
35	596	668	18	1.8	PH831_0050K302_0175 EZ701U	1610	1610	3650	86.47	7955/92	3500	3100	5000	9.3	4.0	2.0	245	60
35	781	894	23	1.4	PH831_0050K302_0175 EZ503U	1850	1850	2620	86.47	7955/92	3500	3100	5000	8.4	4.0	2.0	245	60
35	966	1159	28	1.1	PH831_0050K302_0175 EZ702U	1850	1850	3650	86.47	7955/92	3500	3100	5000	15	4.0	2.0	245	62
35	1087	1288	32	1.0	PH831_0050K302_0175 EZ505U	1850	1850	3650	86.47	7955/92	3500	3100	5000	13	4.0	2.0	245	63
36	162	171	17	2.9	PH831_0100K202_0084 EZ303U	470	470	640	83.97	24940/297	3500	3100	5000	1.2	3.5	1.5	260	49
36	219	235	13	3.9	PH831_0100K202_0084 EZ401U	660	660	2550	83.97	24940/297	3500	3100	5000	1.8	3.5	1.5	260	51
36	336	368	20	2.5	PH831_0100K202_0084 EZ501U	1250	1250	2550	83.97	24940/297	3500	3100	5000	3.7	3.5	1.5	260	52
36	368	407	22	2.3	PH831_0100K202_0084 EZ402U	1250	1250	2550	83.97	24940/297	3500	3100	5000	2.5	3.5	1.5	260	52
36	540	672	32	1.6	PH831_0100K202_0084 EZ404U	1390	1390	2550	83.97	24940/297	3500	3100	5000	3.8	3.5	1.5	260	54
36	579	626	35	1.5	PH831_0100K202_0084 EZ502U	1390	1390	2550	83.97	24940/297	3500	3100	5000	6.0	3.5	1.5	260	53
36	579	649	35	1.5	PH831_0100K202_0084 EZ701U	1390	1390	2780	83.97	24940/297	3500	3100	5000	9.3	3.5	1.5	260	55
36	758	868	45	1.1	PH831_0100K202_0084 EZ503U	1390	1390	2550	83.97	24940/297	3500	3100	5000	8.4	3.5	1.5	260	55
37	120	126	11	3.8	PH831_0070K202_0115 EZ302U	380	380	610	80.82	8729/108	3500	3100	5000	1.0	3.5	1.5	245	49
37	156	165	14	2.9	PH831_0070K202_0115 EZ303U	450	450	610	80.82	8729/108	3500	3100	5000	1.1	3.5	1.5	245	49
37	211	226	9.5	4.2	PH831_0070K202_0115 EZ401U	640	640	2450	80.82	8729/108	3500	3100	5000	1.7	3.5	1.5	245	51
37	324	354	15	2.7	PH831_0070K202_0115 EZ501U	1200	1200	2450	80.82	8729/108	3500	3100	5000	3.6	3.5	1.5	245	52
37	354	391	16	2.5	PH831_0070K202_0115 EZ402U	1200	1200	2450	80.82	8729/108	3500	3100	5000	2.4	3.5	1.5	245	52

n_{2N} [rpm]	M_{2N} [Nm]	$M_{2,0}$ [Nm]	a_{th}	S	Type	M_{2acc} [Nm]	M_{2accHT} [Nm]	M_{2NOT} [Nm]	i	i_{exakt}	n_{1maxDB} EL1,2 [rpm]	n_{1maxDB} EL3,4,5,6 [rpm]	n_{1maxZB} [rpm]	J_1 [kgcm²]	$\Delta\varphi_2$ [arcmin]	$\Delta\varphi_{2red}$ [arcmin]	C_2 [Nm/arcmin]	m [kg]
PH831K (n_{1N} = 3000 rpm, $M_{2acc,max}$ = 1850 Nm)																		
37	519	647	23	1.7	PH831_0070K202_0115 EZ404U	1480	1480	2450	80.82	8729/108	3500	3100	5000	3.7	3.5	1.5	245	54
37	557	602	25	1.6	PH831_0070K202_0115 EZ502U	1480	1480	2450	80.82	8729/108	3500	3100	5000	5.9	3.5	1.5	245	53
37	557	625	25	1.6	PH831_0070K202_0115 EZ701U	1480	1480	2920	80.82	8729/108	3500	3100	5000	9.2	3.5	1.5	245	55
37	730	835	33	1.2	PH831_0070K202_0115 EZ503U	1480	1480	2450	80.82	8729/108	3500	3100	5000	8.3	3.5	1.5	245	55
43	184	197	9.6	4.6	PH831_0070K202_0100 EZ401U	560	560	2140	70.51	20167/286	3900	3500	5500	1.6	3.5	1.5	245	51
43	282	309	15	3.0	PH831_0070K202_0100 EZ501U	1050	1050	2140	70.51	20167/286	3900	3500	5500	3.6	3.5	1.5	245	52
43	309	341	16	2.7	PH831_0070K202_0100 EZ402U	1050	1050	2140	70.51	20167/286	3900	3500	5500	2.3	3.5	1.5	245	52
43	453	565	24	1.9	PH831_0070K202_0100 EZ404U	1480	1480	2140	70.51	20167/286	3900	3500	5500	3.6	3.5	1.5	245	54
43	486	525	25	1.7	PH831_0070K202_0100 EZ502U	1480	1480	2140	70.51	20167/286	3900	3500	5500	5.9	3.5	1.5	245	53
43	486	545	25	1.7	PH831_0070K202_0100 EZ701U	1310	1310	2920	70.51	20167/286	3900	3500	5500	9.2	3.5	1.5	245	55
43	637	729	33	1.3	PH831_0070K202_0100 EZ503U	1480	1480	2140	70.51	20167/286	3900	3500	5500	8.2	3.5	1.5	245	55
43	788	946	41	1.1	PH831_0070K202_0100 EZ702U	1480	1480	2920	70.51	20167/286	3900	3500	5500	14	3.5	1.5	245	57
43	279	305	9.7	3.9	PH831_0050K302_0140 EZ501U	1040	1040	2110	69.68	7525/108	3500	3100	5000	4.0	4.0	2.0	245	57
43	305	337	11	3.6	PH831_0050K302_0140 EZ402U	1040	1040	2110	69.68	7525/108	3500	3100	5000	2.7	4.0	2.0	245	57
43	448	558	16	2.5	PH831_0050K302_0140 EZ404U	1560	1560	2110	69.68	7525/108	3500	3100	5000	4.1	4.0	2.0	245	59
43	480	519	17	2.3	PH831_0050K302_0140 EZ502U	1560	1560	2110	69.68	7525/108	3500	3100	5000	6.3	4.0	2.0	245	58
43	480	539	17	2.3	PH831_0050K302_0140 EZ701U	1300	1300	3650	69.68	7525/108	3500	3100	5000	9.6	4.0	2.0	245	60
43	629	720	22	1.7	PH831_0050K302_0140 EZ503U	1560	1560	2110	69.68	7525/108	3500	3100	5000	8.7	4.0	2.0	245	60
43	779	934	27	1.4	PH831_0050K302_0140 EZ702U	1850	1850	3650	69.68	7525/108	3500	3100	5000	15	4.0	2.0	245	62
43	876	1038	30	1.3	PH831_0050K302_0140 EZ505U	1850	1850	3650	69.68	7525/108	3500	3100	5000	13	4.0	2.0	245	63
43	1071	1350	37	1.0	PH831_0050K302_0140 EZ703U	1850	1850	3650	69.68	7525/108	3500	3100	5000	23	4.0	2.0	245	64
45	174	187	12	4.9	PH831_0100K202_0067 EZ401U	530	530	2030	66.83	22790/341	3500	3100	5000	2.1	3.5	1.5	260	51
45	268	292	19	3.2	PH831_0100K202_0067 EZ501U	1000	1000	2030	66.83	22790/341	3500	3100	5000	4.1	3.5	1.5	260	52
45	292	324	21	2.9	PH831_0100K202_0067 EZ402U	1000	1000	2030	66.83	22790/341	3500	3100	5000	2.8	3.5	1.5	260	52
45	429	535	30	2.0	PH831_0100K202_0067 EZ404U	1390	1390	2030	66.83	22790/341	3500	3100	5000	4.2	3.5	1.5	260	54
45	461	498	33	1.8	PH831_0100K202_0067 EZ502U	1390	1390	2030	66.83	22790/341	3500	3100	5000	6.4	3.5	1.5	260	53
45	461	517	33	1.8	PH831_0100K202_0067 EZ701U	1240	1240	2780	66.83	22790/341	3500	3100	5000	9.7	3.5	1.5	260	55
45	604	691	43	1.4	PH831_0100K202_0067 EZ503U	1390	1390	2030	66.83	22790/341	3500	3100	5000	8.8	3.5	1.5	260	55
45	747	896	53	1.1	PH831_0100K202_0067 EZ702U	1390	1390	2780	66.83	22790/341	3500	3100	5000	15	3.5	1.5	260	57
45	840	996	59	1.0	PH831_0100K202_0067 EZ505U	1390	1390	2780	66.83	22790/341	3500	3100	5000	13	3.5	1.5	260	58
47	168	180	9.7	4.9	PH831_0070K202_0092 EZ401U	510	510	1950	64.33	15953/248	3500	3100	5000	2.0	3.5	1.5	245	51
47	258	282	15	3.2	PH831_0070K202_0092 EZ501U	960	960	1950	64.33	15953/248	3500	3100	5000	3.9	3.5	1.5	245	52
47	282	312	16	2.9	PH831_0070K202_0092 EZ402U	960	960	1950	64.33	15953/248	3500	3100	5000	2.7	3.5	1.5	245	52
47	413	515	24	2.0	PH831_0070K202_0092 EZ404U	1440	1440	1950	64.33	15953/248	3500	3100	5000	4.0	3.5	1.5	245	54
47	443	479	26	1.8	PH831_0070K202_0092 EZ502U	1440	1440	1950	64.33	15953/248	3500	3100	5000	6.2	3.5	1.5	245	53
47	443	497	26	1.8	PH831_0070K202_0092 EZ701U	1200	1200	2920	64.33	15953/248	3500	3100	5000	9.5	3.5	1.5	245	55
47	581	665	34	1.4	PH831_0070K202_0092 EZ503U	1440	1440	1950	64.33	15953/248	3500	3100	5000	8.6	3.5	1.5	245	55
47	719	863	42	1.1	PH831_0070K202_0092 EZ702U	1480	1480	2920	64.33	15953/248	3500	3100	5000	15	3.5	1.5	245	57
47	809	958	47	1.0	PH831_0070K202_0092 EZ505U	1480	1480	2920	64.33	15953/248	3500	3100	5000	13	3.5	1.5	245	58
50	240	263	18	3.5	PH831_0100K202_0060 EZ501U	890	890	1820	60.00	60/1	3000	2600	4500	4.7	3.5	1.5	260	52
50	263	291	20	3.2	PH831_0100K202_0060 EZ402U	890	890	1820	60.00	60/1	3000	2600	4500	3.4	3.5	1.5	260	52
50	386	480	30	2.2	PH831_0100K202_0060 EZ404U	1340	1340	1820	60.00	60/1	3000	2600	4500	4.8	3.5	1.5	260	54
50	413	447	32	2.1	PH831_0100K202_0060 EZ502U	1340	1340	1820	60.00	60/1	3000	2600	4500	7.0	3.5	1.5	260	53
50	413	464	32	2.1	PH831_0100K202_0060 EZ701U	1120	1120	2780	60.00	60/1	3000	2600	4500	10	3.5	1.5	260	55
50	542	620	42	1.6	PH831_0100K202_0060 EZ503U	1340	1340	1820	60.00	60/1	3000	2600	4500	9.4	3.5	1.5	260	55
50	670	805	51	1.3	PH831_0100K202_0060 EZ702U	1390	1390	2780	60.00	60/1	3000	2600	4500	16	3.5	1.5	260	57
50	754	894	58	1.1	PH831_0100K202_0060 EZ505U	1390	1390	2780	60.00	60/1	3000	2600	4500	14	3.5	1.5	260	58
51	113	120	17	2.9	PH831_0070K202_0084 EZ303U	330	330	450	58.78	17458/297	3500	3100	5000	1.3	3.5	1.5	245	49
51	235	257	15	3.4	PH831_0070K202_0084 EZ501U	880	880	1780	58.78	17458/297	3500	3100	5000	3.8	3.5	1.5	245	52
51	257	285	16	3.1	PH831_0070K202_0084 EZ402U	880	880	1780	58.78	17458/297	3500	3100	5000	2.5	3.5	1.5	245	52
51	378	471	24	2.1	PH831_0070K202_0084 EZ404U	1310	1310	1780	58.78	17458/297	3500	3100	5000	3.9	3.5	1.5	245	54
51	405	438	26	2.0	PH831_0070K202_0084 EZ502U	1310	1310	1780	58.78	17458/297	3500	3100	5000	6.1	3.5	1.5	245	53
51	405	454	26	2.0	PH831_0070K202_0084 EZ701U	1090	1090	2920	58.78	17458/297	3500	3100	5000	9.4	3.5	1.5	245	55
51	531	608	34	1.5	PH831_0070K202_0084 EZ503U	1310	1310	1780	58.78	17458/297	3500	3100	5000	8.5	3.5	1.5	245	55
51	657	788	42	1.2	PH831_0070K202_0084 EZ702U	1480	1480	2920	58.78	17458/297	3500	3100	5000	15	3.5	1.5	245	57
51	739	876	47	1.1	PH831_0070K202_0084 EZ505U	1480	1480	2920	58.78	17458/297	3500	3100	5000	13	3.5	1.5	245	58
52	232	254	9.2	4.7	PH831_0050K302_0115 EZ501U	860	860	1760	58.05	1161/20	3200	2800	4500	4.4	4.0	2.0	245	57
52	254	281	10	4.3	PH831_0050K302_0115 EZ402U	860	860	1760	58.05	1161/20	3200	2800	4500	3.1	4.0	2.0	245	57
52	373	465	15	2.9	PH831_0050K302_0115 EZ404U	1300	1300	1760	58.05	1161/20	3200	2800	4500	4.5	4.0	2.0	245	59
52	400	432	16	2.8	PH831_0050K302_0115 EZ502U	1300	1300	1760	58.05	1161/20	3200	2800	4500	6.7	4.0	2.0	245	58
52	400	449	16	2.8	PH831_0050K302_0115 EZ701U	1080	1080	3650	58.05	1161/20	3200	2800	4500	10	4.0	2.0	245	60
52	524	600	21	2.1	PH831_0050K302_0115 EZ503U	1300	1300	1760	58.05	1161/20	3200	2800	4500	9.1	4.0	2.0	245	60
52	649	778	26	1.7	PH831_0050K302_0115 EZ702U	1850	1850	3650	58.05	1161/20	3200	2800	4500	15	4.0	2.0	245	62
52	730	865	29	1.5	PH831_0050K302_0115 EZ505U	1850	1850	3650	58.05	1161/20	3200	2800	4500	14	4.0	2.0	245	63

n_{2N} [rpm]	M_{2N} [Nm]	$M_{2,0}$ [Nm]	a_{th}	S	Type	M_{2acc} [Nm]	M_{2accHT} [Nm]	M_{2NOT} [Nm]	i	i_{exakt}	n_{1maxDB} EL1,2 [rpm]	n_{1maxDB} EL3,4,5,6 [rpm]	n_{1maxZB} [rpm]	J_1 [kgcm²]	$\Delta\varphi_2$ [arcmin]	$\Delta\varphi_{2red}$ [arcmin]	C_2 [Nm/arcmin]	m [kg]
PH831K (n_{1N} = 3000 rpm, $M_{2acc,max}$ = 1850 Nm)																		
52	892	1124	35	1.2	PH831_0050K302_0115 EZ703U	1850	1850	3650	58.05	1161/20	3200	2800	4500	23	4.0	2.0	245	64
58	357	400	31	2.4	PH831_0100K202_0052 EZ701U	960	960	2780	51.77	21070/407	3000	2600	4500	10	3.5	1.5	260	55
58	578	694	50	1.5	PH831_0100K202_0052 EZ702U	1390	1390	2780	51.77	21070/407	3000	2600	4500	16	3.5	1.5	260	57
58	651	771	56	1.3	PH831_0100K202_0052 EZ505U	1390	1390	2780	51.77	21070/407	3000	2600	4500	14	3.5	1.5	260	58
58	795	1003	68	1.1	PH831_0100K202_0052 EZ703U	1390	1390	2780	51.77	21070/407	3000	2600	4500	23	3.5	1.5	260	59
60	343	385	26	2.2	PH831_0070K202_0071 EZ701U	930	930	2920	49.83	14749/296	3000	2600	4500	10	3.5	1.5	245	55
60	557	668	42	1.4	PH831_0070K202_0071 EZ702U	1420	1420	2920	49.83	14749/296	3000	2600	4500	15	3.5	1.5	245	57
60	626	742	48	1.2	PH831_0070K202_0071 EZ505U	1420	1420	2920	49.83	14749/296	3000	2600	4500	14	3.5	1.5	245	58
64	187	205	15	3.9	PH831_0070K202_0067 EZ501U	700	700	1420	46.78	15953/341	3500	3100	5000	4.2	3.5	1.5	245	52
64	205	227	17	3.6	PH831_0070K202_0067 EZ402U	700	700	1420	46.78	15953/341	3500	3100	5000	2.9	3.5	1.5	245	52
64	301	375	25	2.4	PH831_0070K202_0067 EZ404U	1050	1050	1420	46.78	15953/341	3500	3100	5000	4.3	3.5	1.5	245	54
64	322	349	26	2.3	PH831_0070K202_0067 EZ502U	1050	1050	1420	46.78	15953/341	3500	3100	5000	6.5	3.5	1.5	245	53
64	322	362	26	2.3	PH831_0070K202_0067 EZ701U	870	870	2920	46.78	15953/341	3500	3100	5000	9.8	3.5	1.5	245	55
64	423	484	35	1.7	PH831_0070K202_0067 EZ503U	1050	1050	1420	46.78	15953/341	3500	3100	5000	8.9	3.5	1.5	245	55
64	523	627	43	1.4	PH831_0070K202_0067 EZ702U	1390	1390	2920	46.78	15953/341	3500	3100	5000	15	3.5	1.5	245	57
64	588	697	48	1.3	PH831_0070K202_0067 EZ505U	1390	1390	2920	46.78	15953/341	3500	3100	5000	13	3.5	1.5	245	58
64	719	906	59	1.0	PH831_0070K202_0067 EZ703U	1390	1390	2920	46.78	15953/341	3500	3100	5000	23	3.5	1.5	245	59
65	319	358	16	3.2	PH831_0050K302_0093 EZ701U	860	860	3510	46.34	5375/116	3200	2800	4500	11	4.0	2.0	245	60
65	518	621	26	2.0	PH831_0050K302_0093 EZ702U	1770	1770	3510	46.34	5375/116	3200	2800	4500	16	4.0	2.0	245	62
65	582	690	29	1.8	PH831_0050K302_0093 EZ505U	1850	1850	3510	46.34	5375/116	3200	2800	4500	14	4.0	2.0	245	63
65	712	897	36	1.4	PH831_0050K302_0093 EZ703U	1850	1850	3510	46.34	5375/116	3200	2800	4500	24	4.0	2.0	245	64
71	168	184	15	4.2	PH831_0070K202_0060 EZ501U	630	630	1270	42.00	42/1	3000	2600	4500	4.8	3.5	1.5	245	52
71	184	203	17	3.9	PH831_0070K202_0060 EZ402U	630	630	1270	42.00	42/1	3000	2600	4500	3.6	3.5	1.5	245	52
71	270	336	25	2.6	PH831_0070K202_0060 EZ404U	940	940	1270	42.00	42/1	3000	2600	4500	4.9	3.5	1.5	245	54
71	289	313	27	2.5	PH831_0070K202_0060 EZ502U	940	940	1270	42.00	42/1	3000	2600	4500	7.1	3.5	1.5	245	53
71	289	325	27	2.5	PH831_0070K202_0060 EZ701U	780	780	2920	42.00	42/1	3000	2600	4500	10	3.5	1.5	245	55
71	379	434	35	1.9	PH831_0070K202_0060 EZ503U	940	940	1270	42.00	42/1	3000	2600	4500	9.5	3.5	1.5	245	55
71	469	563	43	1.5	PH831_0070K202_0060 EZ702U	1340	1340	2920	42.00	42/1	3000	2600	4500	16	3.5	1.5	245	57
71	528	626	48	1.3	PH831_0070K202_0060 EZ505U	1340	1340	2920	42.00	42/1	3000	2600	4500	14	3.5	1.5	245	58
71	645	813	59	1.1	PH831_0070K202_0060 EZ703U	1340	1340	2920	42.00	42/1	3000	2600	4500	24	3.5	1.5	245	59
75	276	309	29	3.1	PH831_0100K202_0040 EZ701U	740	740	2780	40.00	40/1	3000	2600	4500	11	3.5	1.5	260	55
75	447	536	46	1.9	PH831_0100K202_0040 EZ702U	1390	1390	2780	40.00	40/1	3000	2600	4500	16	3.5	1.5	260	57
75	503	596	52	1.7	PH831_0100K202_0040 EZ505U	1390	1390	2780	40.00	40/1	3000	2600	4500	15	3.5	1.5	260	58
75	615	775	64	1.4	PH831_0100K202_0040 EZ703U	1390	1390	2780	40.00	40/1	3000	2600	4500	24	3.5	1.5	260	59
81	255	286	16	3.7	PH831_0050K302_0074 EZ701U	690	690	2800	36.96	2365/64	2700	2300	4000	11	4.0	2.0	245	60
81	413	496	27	2.3	PH831_0050K302_0074 EZ702U	1410	1410	2800	36.96	2365/64	2700	2300	4000	17	4.0	2.0	245	62
81	465	551	30	2.1	PH831_0050K302_0074 EZ505U	1800	1800	2800	36.96	2365/64	2700	2300	4000	15	4.0	2.0	245	63
81	568	716	37	1.7	PH831_0050K302_0074 EZ703U	1800	1800	2800	36.96	2365/64	2700	2300	4000	25	4.0	2.0	245	64
83	250	280	27	2.7	PH831_0070K202_0052 EZ701U	670	670	2750	36.24	14749/407	3000	2600	4500	10	3.5	1.5	245	55
83	405	486	44	1.7	PH831_0070K202_0052 EZ702U	1280	1280	2750	36.24	14749/407	3000	2600	4500	16	3.5	1.5	245	57
83	456	540	49	1.5	PH831_0070K202_0052 EZ505U	1280	1280	2750	36.24	14749/407	3000	2600	4500	14	3.5	1.5	245	58
83	557	702	60	1.2	PH831_0070K202_0052 EZ703U	1280	1280	2750	36.24	14749/407	3000	2600	4500	24	3.5	1.5	245	59
98	134	148	17	4.8	PH831_0070K202_0044 EZ402U	460	460	930	30.55	336/11	3000	2600	4500	4.2	3.5	1.5	245	52
98	196	245	25	3.3	PH831_0070K202_0044 EZ404U	680	680	930	30.55	336/11	3000	2600	4500	5.5	3.5	1.5	245	54
98	211	228	27	3.0	PH831_0070K202_0044 EZ502U	680	680	930	30.55	336/11	3000	2600	4500	7.8	3.5	1.5	245	53
98	211	236	27	3.0	PH831_0070K202_0044 EZ701U	570	570	2310	30.55	336/11	3000	2600	4500	11	3.5	1.5	245	55
98	276	316	36	2.3	PH831_0070K202_0044 EZ503U	680	680	930	30.55	336/11	3000	2600	4500	10	3.5	1.5	245	55
98	341	410	44	1.9	PH831_0070K202_0044 EZ702U	1170	1170	2310	30.55	336/11	3000	2600	4500	16	3.5	1.5	245	57
98	384	455	50	1.7	PH831_0070K202_0044 EZ505U	1210	1210	2310	30.55	336/11	3000	2600	4500	15	3.5	1.5	245	58
98	469	592	61	1.4	PH831_0070K202_0044 EZ703U	1210	1210	2310	30.55	336/11	3000	2600	4500	24	3.5	1.5	245	59
100	207	232	17	4.3	PH831_0050K302_0060 EZ701U	560	560	2270	30.00	30/1	2700	2300	4000	12	4.0	2.0	245	60
100	335	402	27	2.7	PH831_0050K302_0060 EZ702U	1150	1150	2270	30.00	30/1	2700	2300	4000	18	4.0	2.0	245	62
100	377	447	30	2.4	PH831_0050K302_0060 EZ505U	1680	1680	2270	30.00	30/1	2700	2300	4000	16	4.0	2.0	245	63
100	461	581	37	1.9	PH831_0050K302_0060 EZ703U	1680	1680	2270	30.00	30/1	2700	2300	4000	26	4.0	2.0	245	64
100	595	844	48	1.5	PH831_0050K302_0060 EZ705U	1680	1680	3650	30.00	30/1	2700	2300	4000	38	4.0	2.0	245	70
107	193	216	27	3.2	PH831_0070K202_0040 EZ701U	520	520	2120	28.00	28/1	3000	2600	4500	11	3.5	1.5	245	55
107	313	375	45	2.0	PH831_0070K202_0040 EZ702U	1070	1070	2120	28.00	28/1	3000	2600	4500	17	3.5	1.5	245	57
107	352	417	50	1.8	PH831_0070K202_0040 EZ505U	1170	1170	2120	28.00	28/1	3000	2600	4500	15	3.5	1.5	245	58
107	430	542	61	1.4	PH831_0070K202_0040 EZ703U	1170	1170	2120	28.00	28/1	3000	2600	4500	25	3.5	1.5	245	59
112	185	208	17	4.6	PH831_0050K302_0054 EZ701U	500	500	2040	26.88	215/8	2700	2300	4000	12	4.0	2.0	245	60
112	300	360	27	2.9	PH831_0050K302_0054 EZ702U	1030	1030	2040	26.88	215/8	2700	2300	4000	17	4.0	2.0	245	62
112	338	400	31	2.5	PH831_0050K302_0054 EZ505U	1500	1500	2040	26.88	215/8	2700	2300	4000	16	4.0	2.0	245	63
112	413	521	38	2.1	PH831_0050K302_0054 EZ703U	1500	1500	2040	26.88	215/8	2700	2300	4000	25	4.0	2.0	245	64
150	223	268	28	3.5	PH831_0050K302_0040 EZ702U	760	760	1520	20.00	20/1	2700	2300	4000	20	4.0	2.0	245	62

n_{2N} [rpm]	M_{2N} [Nm]	$M_{2,0}$ [Nm]	a_{th}	S	Type	M_{2acc} [Nm]	M_{2accHT} [Nm]	M_{2NOT} [Nm]	i	i_{exakt}	n_{1maxDB} EL1,2 [rpm]	n_{1maxDB} EL3,4,5,6 [rpm]	n_{1maxZB} [rpm]	J_1 [kgcm²]	$\Delta\varphi_2$ [arcmin]	$\Delta\varphi_{2red}$ [arcmin]	C_2 [Nm/arcmin]	m [kg]
PH831K (n_{1N} = 3000 rpm, $M_{2acc,max}$ = 1850 Nm)																		
150	251	298	31	3.1	PH831_0050K302_0040 EZ505U	1120	1120	1520	20.00	20/1	2700	2300	4000	18	4.0	2.0	245	63
150	307	387	38	2.5	PH831_0050K302_0040 EZ703U	1120	1120	1520	20.00	20/1	2700	2300	4000	28	4.0	2.0	245	64
150	397	562	50	2.0	PH831_0050K302_0040 EZ705U	1470	1470	3650	20.00	20/1	2700	2300	4000	40	4.0	2.0	245	70
188	179	215	28	3.5	PH831_0040K302_0040 EZ702U	610	610	1210	16.00	16/1	2700	2300	4000	20	4.0	2.0	185	62
188	201	238	31	3.1	PH831_0040K302_0040 EZ505U	890	890	1210	16.00	16/1	2700	2300	4000	19	4.0	2.0	185	63
188	246	310	38	2.5	PH831_0040K302_0040 EZ703U	890	890	1210	16.00	16/1	2700	2300	4000	28	4.0	2.0	185	64
188	317	450	50	2.0	PH831_0040K302_0040 EZ705U	1170	1170	2920	16.00	16/1	2700	2300	4000	41	4.0	2.0	185	70
PH831K (n_{1N} = 4500 rpm, $M_{2acc,max}$ = 1850 Nm)																		
52	765	1232	23	1.4	PH831_0050K302_0175 EZ505U	1850	1850	3650	86.47	7955/92	3500	3100	5000	13	4.0	2.0	245	63
64	624	1005	37	1.2	PH831_0070K202_0100 EZ505U	1480	1480	2920	70.51	20167/286	3900	3500	5500	13	3.5	1.5	245	58
65	616	993	23	1.7	PH831_0050K302_0140 EZ505U	1850	1850	3650	69.68	7525/108	3500	3100	5000	13	4.0	2.0	245	63
65	785	1298	29	1.3	PH831_0050K302_0140 EZ703U	1850	1850	3650	69.68	7525/108	3500	3100	5000	23	4.0	2.0	245	64
67	591	952	42	1.4	PH831_0100K202_0067 EZ505U	1390	1390	2780	66.83	22790/341	3500	3100	5000	13	3.5	1.5	260	58
70	569	917	38	1.3	PH831_0070K202_0092 EZ505U	1480	1480	2920	64.33	15953/248	3500	3100	5000	13	3.5	1.5	245	58
75	531	855	41	1.6	PH831_0100K202_0060 EZ505U	1390	1390	2780	60.00	60/1	3000	2600	4500	14	3.5	1.5	260	58
77	520	837	38	1.3	PH831_0070K202_0084 EZ505U	1480	1480	2920	58.78	17458/297	3500	3100	5000	13	3.5	1.5	245	58
77	662	1095	48	1.0	PH831_0070K202_0084 EZ703U	1480	1480	2920	58.78	17458/297	3500	3100	5000	23	3.5	1.5	245	59
78	514	827	23	1.9	PH831_0050K302_0115 EZ505U	1850	1850	3650	58.05	1161/20	3200	2800	4500	14	4.0	2.0	245	63
78	654	1081	30	1.5	PH831_0050K302_0115 EZ703U	1850	1850	3650	58.05	1161/20	3200	2800	4500	23	4.0	2.0	245	64
87	458	738	40	1.8	PH831_0100K202_0052 EZ505U	1390	1390	2780	51.77	21070/407	3000	2600	4500	14	3.5	1.5	260	58
87	583	964	50	1.4	PH831_0100K202_0052 EZ703U	1390	1390	2780	51.77	21070/407	3000	2600	4500	23	3.5	1.5	260	59
90	441	710	39	1.5	PH831_0070K202_0071 EZ505U	1420	1420	2920	49.83	14749/296	3000	2600	4500	14	3.5	1.5	245	58
90	561	928	49	1.2	PH831_0070K202_0071 EZ703U	1420	1420	2920	49.83	14749/296	3000	2600	4500	23	3.5	1.5	245	59
96	414	667	39	1.6	PH831_0070K202_0067 EZ505U	1390	1390	2920	46.78	15953/341	3500	3100	5000	13	3.5	1.5	245	58
96	527	871	49	1.2	PH831_0070K202_0067 EZ703U	1390	1390	2920	46.78	15953/341	3500	3100	5000	23	3.5	1.5	245	59
97	410	660	24	2.2	PH831_0050K302_0093 EZ505U	1850	1850	3510	46.34	5375/116	3200	2800	4500	14	4.0	2.0	245	63
97	522	863	30	1.7	PH831_0050K302_0093 EZ703U	1850	1850	3510	46.34	5375/116	3200	2800	4500	24	4.0	2.0	245	64
107	372	598	39	1.7	PH831_0070K202_0060 EZ505U	1340	1340	2920	42.00	42/1	3000	2600	4500	14	3.5	1.5	245	58
107	473	782	50	1.3	PH831_0070K202_0060 EZ703U	1340	1340	2920	42.00	42/1	3000	2600	4500	24	3.5	1.5	245	59
113	354	570	40	2.2	PH831_0100K202_0040 EZ505U	1390	1390	2780	40.00	40/1	3000	2600	4500	15	3.5	1.5	260	58
113	451	745	51	1.7	PH831_0100K202_0040 EZ703U	1390	1390	2780	40.00	40/1	3000	2600	4500	24	3.5	1.5	260	59
124	321	516	40	1.8	PH831_0070K202_0052 EZ505U	1280	1280	2750	36.24	14749/407	3000	2600	4500	14	3.5	1.5	245	58
124	408	675	50	1.4	PH831_0070K202_0052 EZ703U	1280	1280	2750	36.24	14749/407	3000	2600	4500	24	3.5	1.5	245	59
147	270	435	40	2.1	PH831_0070K202_0044 EZ505U	1210	1210	2310	30.55	336/11	3000	2600	4500	15	3.5	1.5	245	58
147	344	569	51	1.6	PH831_0070K202_0044 EZ703U	1210	1210	2310	30.55	336/11	3000	2600	4500	24	3.5	1.5	245	59
161	248	399	40	2.2	PH831_0070K202_0040 EZ505U	1170	1170	2120	28.00	28/1	3000	2600	4500	15	3.5	1.5	245	58
161	315	521	51	1.7	PH831_0070K202_0040 EZ703U	1170	1170	2120	28.00	28/1	3000	2600	4500	25	3.5	1.5	245	59
PH831K (n_{1N} = 6000 rpm, $M_{2acc,max}$ = 1850 Nm)																		
11	776	869	11	1.1	PH831_0100K202_0560 EZ302U	1390	1390	2780	555.4	6665/12	4000	3900	6500	0.34	3.5	1.5	260	49
12	679	760	7.9	1.3	PH831_0070K202_0690 EZ302U	1070	1070	1860	486.0	46655/96	4000	3900	6500	0.33	3.5	1.5	245	49
13	646	723	11	1.3	PH831_0100K202_0460 EZ302U	1390	1390	2690	462.3	1849/4	4000	3900	6500	0.37	3.5	1.5	260	49
13	844	969	14	1.0	PH831_0100K202_0460 EZ303U	1390	1390	2690	462.3	1849/4	4000	3900	6500	0.48	3.5	1.5	260	49
15	543	608	6.7	1.8	PH831_0070K202_0560 EZ302U	1280	1280	1980	388.8	9331/24	4000	3900	6500	0.35	3.5	1.5	245	49
15	710	815	8.7	1.4	PH831_0070K202_0560 EZ303U	1280	1280	1980	388.8	9331/24	4000	3900	6500	0.46	3.5	1.5	245	49
17	494	553	10	1.3	PH831_0070K202_0500 EZ302U	780	780	1350	353.4	46655/132	4000	3900	6500	0.33	3.5	1.5	245	49
17	483	541	10	1.8	PH831_0100K202_0350 EZ302U	1390	1390	2230	345.5	9675/28	4000	3900	6500	0.42	3.5	1.5	260	49
17	631	724	13	1.3	PH831_0100K202_0350 EZ303U	1390	1390	2230	345.5	9675/28	4000	3900	6500	0.53	3.5	1.5	260	49
17	740	901	15	1.1	PH831_0100K202_0350 EZ401U	1390	1390	2780	345.5	9675/28	4000	3900	6500	1.1	3.5	1.5	260	51
19	452	506	6.4	2.2	PH831_0070K202_0460 EZ302U	1390	1390	1880	323.6	12943/40	4000	3900	6500	0.37	3.5	1.5	245	49
19	591	678	8.3	1.7	PH831_0070K202_0460 EZ303U	1390	1390	1880	323.6	12943/40	4000	3900	6500	0.48	3.5	1.5	245	49
19	693	844	9.8	1.4	PH831_0070K202_0460 EZ401U	1480	1480	2920	323.6	12943/40	4000	3900	6500	1.0	3.5	1.5	245	51
21	395	442	7.9	2.0	PH831_0070K202_0400 EZ302U	930	930	1440	282.8	9331/33	4000	3900	6500	0.35	3.5	1.5	245	49
21	516	592	10	1.5	PH831_0070K202_0400 EZ303U	930	930	1440	282.8	9331/33	4000	3900	6500	0.46	3.5	1.5	245	49
21	599	729	14	1.4	PH831_0100K202_0280 EZ401U	1390	1390	2780	279.5	559/2	4000	3900	6500	1.1	3.5	1.5	260	51
22	597	726	7.3	1.8	PH831_0050K302_0560 EZ401U	1520	1520	2760	278.5	12255/44	3800	3500	6000	1.0	4.0	2.0	245	56
22	882	1141	11	1.2	PH831_0050K302_0560 EZ501U	1520	1520	2760	278.5	12255/44	3800	3500	6000	3.0	4.0	2.0	245	57
25	338	378	5.9	3.0	PH831_0070K202_0350 EZ302U	1130	1130	1560	241.9	1935/8	4000	3900	6500	0.42	3.5	1.5	245	49
25	441	507	7.7	2.3	PH831_0070K202_0350 EZ303U	1150	1150	1560	241.9	1935/8	4000	3900	6500	0.53	3.5	1.5	245	49
25	518	631	9.1	1.9	PH831_0070K202_0350 EZ401U	1480	1480	2920	241.9	1935/8	4000	3900	6500	1.1	3.5	1.5	245	51
25	766	991	13	1.3	PH831_0070K202_0350 EZ501U	1480	1480	2920	241.9	1935/8	4000	3900	6500	3.0	3.5	1.5	245	52
25	788	1104	14	1.3	PH831_0070K202_0350 EZ402U	1480	1480	2920	241.9	1935/8	4000	3900	6500	1.8	3.5	1.5	245	52
25	329	368	5.9	3.0	PH831_0070K202_0340 EZ302U	1010	1010	1370	235.3	12943/55	4000	3900	6500	0.38	3.5	1.5	245	49
25	430	493	7.7	2.3	PH831_0070K202_0340 EZ303U	1010	1010	1370	235.3	12943/55	4000	3900	6500	0.49	3.5	1.5	245	49
25	504	614	9.0	2.0	PH831_0070K202_0340 EZ401U	1240	1240	2250	235.3	12943/55	4000	3900	6500	1.0	3.5	1.5	245	51

n_{2N} [rpm]	M_{2N} [Nm]	$M_{2,0}$ [Nm]	a_{th}	S	Type	M_{2acc} [Nm]	M_{2accHT} [Nm]	M_{2NOT} [Nm]	i	i_{exakt}	n_{1maxDB} EL1,2 [rpm]	n_{1maxDB} EL3,4,5,6 [rpm]	n_{1maxZB} [rpm]	J_1 [kgcm²]	$\Delta\varphi_2$ [arcmin]	$\Delta\varphi_{2red}$ [arcmin]	C_2 [Nm/arcmin]	m [kg]
PH831K (n_{1N} = 6000 rpm, $M_{2acc,max}$ = 1850 Nm)																		
26	324	363	9.0	2.6	PH831_0100K202_0230 EZ302U	1080	1080	1760	231.8	14835/64	4000	3900	6500	0.53	3.5	1.5	260	49
26	423	486	12	2.0	PH831_0100K202_0230 EZ303U	1300	1300	1760	231.8	14835/64	4000	3900	6500	0.64	3.5	1.5	260	49
26	496	604	14	1.7	PH831_0100K202_0230 EZ401U	1390	1390	2780	231.8	14835/64	4000	3900	6500	1.2	3.5	1.5	260	51
26	734	950	20	1.2	PH831_0100K202_0230 EZ501U	1390	1390	2780	231.8	14835/64	4000	3900	6500	3.1	3.5	1.5	260	52
26	755	1058	21	1.1	PH831_0100K202_0230 EZ402U	1390	1390	2780	231.8	14835/64	4000	3900	6500	1.9	3.5	1.5	260	52
26	495	603	7.0	2.2	PH831_0050K302_0460 EZ401U	1830	1830	3580	231.1	1849/8	3800	3500	6000	1.1	4.0	2.0	245	56
26	732	947	10	1.5	PH831_0050K302_0460 EZ501U	1850	1850	3580	231.1	1849/8	3800	3500	6000	3.1	4.0	2.0	245	57
26	753	1055	11	1.5	PH831_0050K302_0460 EZ402U	1850	1850	3580	231.1	1849/8	3800	3500	6000	1.8	4.0	2.0	245	57
31	419	510	9.2	2.2	PH831_0070K202_0280 EZ401U	1480	1480	2920	195.7	3913/20	4000	3900	6500	1.1	3.5	1.5	245	51
31	619	802	14	1.5	PH831_0070K202_0280 EZ501U	1480	1480	2920	195.7	3913/20	4000	3900	6500	3.1	3.5	1.5	245	52
31	638	893	14	1.5	PH831_0070K202_0280 EZ402U	1480	1480	2920	195.7	3913/20	4000	3900	6500	1.8	3.5	1.5	245	52
34	246	275	6.5	3.4	PH831_0070K202_0250 EZ302U	820	820	1140	175.9	1935/11	4000	3900	6500	0.44	3.5	1.5	245	49
34	321	369	8.5	2.6	PH831_0070K202_0250 EZ303U	840	840	1140	175.9	1935/11	4000	3900	6500	0.55	3.5	1.5	245	49
34	377	459	9.2	2.4	PH831_0070K202_0250 EZ401U	1390	1390	2920	175.9	1935/11	4000	3900	6500	1.1	3.5	1.5	245	51
34	557	721	14	1.6	PH831_0070K202_0250 EZ501U	1480	1480	2920	175.9	1935/11	4000	3900	6500	3.0	3.5	1.5	245	52
34	573	803	14	1.6	PH831_0070K202_0250 EZ402U	1480	1480	2920	175.9	1935/11	4000	3900	6500	1.8	3.5	1.5	245	52
35	372	453	6.5	3.0	PH831_0050K302_0350 EZ401U	1370	1370	3650	173.7	4515/26	3800	3500	6000	1.2	4.0	2.0	245	56
35	550	712	9.6	2.0	PH831_0050K302_0350 EZ501U	1850	1850	3650	173.7	4515/26	3800	3500	6000	3.2	4.0	2.0	245	57
35	566	792	9.9	1.9	PH831_0050K302_0350 EZ402U	1850	1850	3650	173.7	4515/26	3800	3500	6000	1.9	4.0	2.0	245	57
35	841	1261	15	1.3	PH831_0050K302_0350 EZ502U	1850	1850	3650	173.7	4515/26	3800	3500	6000	5.5	4.0	2.0	245	58
35	841	1277	15	1.3	PH831_0050K302_0350 EZ701U	1850	1850	3650	173.7	4515/26	3800	3500	6000	8.8	4.0	2.0	245	60
35	938	1358	16	1.2	PH831_0050K302_0350 EZ404U	1850	1850	3650	173.7	4515/26	3800	3500	6000	3.2	4.0	2.0	245	59
37	227	254	6.1	3.9	PH831_0070K202_0230 EZ302U	760	760	1230	162.3	20769/128	4000	3900	6500	0.54	3.5	1.5	245	49
37	296	340	7.9	3.0	PH831_0070K202_0230 EZ303U	910	910	1230	162.3	20769/128	4000	3900	6500	0.65	3.5	1.5	245	49
37	348	423	9.3	2.5	PH831_0070K202_0230 EZ401U	1280	1280	2920	162.3	20769/128	4000	3900	6500	1.2	3.5	1.5	245	51
37	514	665	14	1.7	PH831_0070K202_0230 EZ501U	1480	1480	2920	162.3	20769/128	4000	3900	6500	3.2	3.5	1.5	245	52
37	529	740	14	1.7	PH831_0070K202_0230 EZ402U	1480	1480	2920	162.3	20769/128	4000	3900	6500	1.9	3.5	1.5	245	52
42	305	371	9.4	2.8	PH831_0070K202_0200 EZ401U	1130	1130	2920	142.3	7826/55	4000	3900	6500	1.1	3.5	1.5	245	51
42	450	583	14	1.9	PH831_0070K202_0200 EZ501U	1480	1480	2920	142.3	7826/55	4000	3900	6500	3.1	3.5	1.5	245	52
42	464	649	14	1.8	PH831_0070K202_0200 EZ402U	1480	1480	2920	142.3	7826/55	4000	3900	6500	1.8	3.5	1.5	245	52
42	689	1033	21	1.2	PH831_0070K202_0200 EZ502U	1480	1480	2920	142.3	7826/55	4000	3900	6500	5.4	3.5	1.5	245	53
42	689	1047	21	1.2	PH831_0070K202_0200 EZ701U	1480	1480	2920	142.3	7826/55	4000	3900	6500	8.7	3.5	1.5	245	55
42	768	1113	24	1.1	PH831_0070K202_0200 EZ404U	1480	1480	2920	142.3	7826/55	4000	3900	6500	3.2	3.5	1.5	245	54
43	299	364	6.2	3.7	PH831_0050K302_0280 EZ401U	1100	1100	3650	139.4	17845/128	3800	3500	6000	1.3	4.0	2.0	245	56
43	441	571	9.1	2.5	PH831_0050K302_0280 EZ501U	1850	1850	3650	139.4	17845/128	3800	3500	6000	3.3	4.0	2.0	245	57
43	454	636	9.4	2.4	PH831_0050K302_0280 EZ402U	1850	1850	3650	139.4	17845/128	3800	3500	6000	2.0	4.0	2.0	245	57
43	675	1013	14	1.6	PH831_0050K302_0280 EZ502U	1850	1850	3650	139.4	17845/128	3800	3500	6000	5.6	4.0	2.0	245	58
43	675	1026	14	1.6	PH831_0050K302_0280 EZ701U	1850	1850	3650	139.4	17845/128	3800	3500	6000	8.9	4.0	2.0	245	60
43	753	1091	16	1.5	PH831_0050K302_0280 EZ404U	1850	1850	3650	139.4	17845/128	3800	3500	6000	3.4	4.0	2.0	245	59
43	805	1376	17	1.4	PH831_0050K302_0280 EZ503U	1850	1850	3650	139.4	17845/128	3800	3500	6000	8.0	4.0	2.0	245	60
51	165	185	7.5	4.0	PH831_0070K202_0170 EZ302U	550	550	890	118.0	20769/176	4000	3900	6500	0.58	3.5	1.5	245	49
51	215	247	9.8	3.1	PH831_0070K202_0170 EZ303U	660	660	890	118.0	20769/176	4000	3900	6500	0.69	3.5	1.5	245	49
51	253	308	9.5	3.1	PH831_0070K202_0170 EZ401U	930	930	2920	118.0	20769/176	4000	3900	6500	1.2	3.5	1.5	245	51
51	374	484	14	2.1	PH831_0070K202_0170 EZ501U	1480	1480	2920	118.0	20769/176	4000	3900	6500	3.2	3.5	1.5	245	52
51	385	538	15	2.1	PH831_0070K202_0170 EZ402U	1480	1480	2920	118.0	20769/176	4000	3900	6500	1.9	3.5	1.5	245	52
51	571	857	22	1.4	PH831_0070K202_0170 EZ502U	1480	1480	2920	118.0	20769/176	4000	3900	6500	5.5	3.5	1.5	245	53
51	571	868	22	1.4	PH831_0070K202_0170 EZ701U	1480	1480	2920	118.0	20769/176	4000	3900	6500	8.8	3.5	1.5	245	55
51	637	923	24	1.2	PH831_0070K202_0170 EZ404U	1480	1480	2920	118.0	20769/176	4000	3900	6500	3.3	3.5	1.5	245	54
52	249	304	5.9	4.4	PH831_0050K302_0230 EZ401U	920	920	3360	116.5	2795/24	3800	3500	6000	1.4	4.0	2.0	245	56
52	369	477	8.7	3.0	PH831_0050K302_0230 EZ501U	1740	1740	3360	116.5	2795/24	3800	3500	6000	3.4	4.0	2.0	245	57
52	380	531	9.0	2.9	PH831_0050K302_0230 EZ402U	1740	1740	3360	116.5	2795/24	3800	3500	6000	2.1	4.0	2.0	245	57
52	564	846	13	2.0	PH831_0050K302_0230 EZ502U	1850	1850	3360	116.5	2795/24	3800	3500	6000	5.7	4.0	2.0	245	58
52	564	857	13	2.0	PH831_0050K302_0230 EZ701U	1850	1850	3650	116.5	2795/24	3800	3500	6000	9.0	4.0	2.0	245	60
52	629	911	15	1.7	PH831_0050K302_0230 EZ404U	1850	1850	3360	116.5	2795/24	3800	3500	6000	3.5	4.0	2.0	245	59
52	672	1150	16	1.6	PH831_0050K302_0230 EZ503U	1850	1850	3360	116.5	2795/24	3800	3500	6000	8.1	4.0	2.0	245	60
PH931K (n_{1N} = 2000 rpm, $M_{2acc,max}$ = 4500 Nm)																		
41	1957	2961	60	1.5	PH931_0060K513_0081 EZ805U	4500	–	9000	48.80	17081/350	1900	1800	3200	147	4.0	–	730	132
49	1628	2463	48	1.7	PH931_0040K513_0100 EZ805U	3840	–	7500	40.60	203/5	1900	1800	3200	144	4.5	–	525	132
61	1305	1974	48	1.9	PH931_0040K513_0081 EZ805U	3840	–	6480	32.54	17081/525	1900	1800	3200	148	4.5	–	525	132
PH931K (n_{1N} = 3000 rpm, $M_{2acc,max}$ = 4500 Nm)																		
6.4	1837	2008	12	1.6	PH931_0060K513_0780 EZ501U	4500	–	8830	465.6	26071/56	3400	3000	5000	3.3	4.0	–	730	91
7.7	1528	1670	11	2.0	PH931_0060K513_0650 EZ501U	4500	–	7950	387.3	25172/65	3400	3000	5000	3.5	4.0	–	730	91
7.7	2630	2843	19	1.1	PH931_0060K513_0650 EZ502U	4500	–	7950	387.3	25172/65	3400	3000	5000	5.8	4.0	–	730	93
7.7	2630	2950	19	1.1	PH931_0060K513_0650 EZ701U	4500	–	9000	387.3	25172/65	3400	3000	5000	9.1	4.0	–	730	95

n_{2N} [rpm]	M_{2N} [Nm]	$M_{2,0}$ [Nm]	a_{th}	S	Type	M_{2acc} [Nm]	M_{2accHT} [Nm]	M_{2NOT} [Nm]	i	i_{exakt}	n_{1maxDB} EL1,2 [rpm]	n_{1maxDB} EL3,4,5,6 [rpm]	n_{1maxZB} [rpm]	J_1 [kgcm²]	$\Delta\varphi_2$ [arcmin]	$\Delta\varphi_{2red}$ [arcmin]	C_2 [Nm/arcmin]	m [kg]
PH931K (n_{1N} = 3000 rpm, $M_{2acc,max}$ = 4500 Nm)																		
10	1140	1246	10	2.6	PH931_0060K513_0480 EZ501U	4240	–	6760	289.0	8091/28	3400	3000	5000	3.9	4.0	–	730	91
10	1962	2122	17	1.5	PH931_0060K513_0480 EZ502U	4500	–	6760	289.0	8091/28	3400	3000	5000	6.2	4.0	–	730	93
10	1962	2201	17	1.5	PH931_0060K513_0480 EZ701U	4500	–	9000	289.0	8091/28	3400	3000	5000	9.5	4.0	–	730	95
10	2572	2944	23	1.2	PH931_0060K513_0480 EZ503U	4500	–	6760	289.0	8091/28	3400	3000	5000	8.6	4.0	–	730	94
13	1570	1761	16	1.9	PH931_0060K513_0390 EZ701U	4240	–	9000	231.2	8091/35	3400	3000	5000	10	4.0	–	730	95
13	2546	3055	26	1.2	PH931_0060K513_0390 EZ702U	4500	–	9000	231.2	8091/35	3400	3000	5000	15	4.0	–	730	97
13	2864	3395	30	1.0	PH931_0060K513_0390 EZ505U	4500	–	9000	231.2	8091/35	3400	3000	5000	14	4.0	–	730	97
15	1317	1477	15	2.3	PH931_0060K513_0320 EZ701U	3560	–	9000	193.8	62031/320	3400	3000	5000	10	4.0	–	730	95
15	2135	2562	25	1.4	PH931_0060K513_0320 EZ702U	4500	–	9000	193.8	62031/320	3400	3000	5000	16	4.0	–	730	97
15	2402	2846	28	1.2	PH931_0060K513_0320 EZ505U	4500	–	9000	193.8	62031/320	3400	3000	5000	14	4.0	–	730	97
21	992	1113	14	3.0	PH931_0060K513_0240 EZ701U	2680	–	9000	146.1	11687/80	2800	2500	4200	11	4.0	–	730	95
21	1609	1931	23	1.9	PH931_0060K513_0240 EZ702U	4500	–	9000	146.1	11687/80	2800	2500	4200	17	4.0	–	730	97
21	1810	2145	26	1.7	PH931_0060K513_0240 EZ505U	4500	–	9000	146.1	11687/80	2800	2500	4200	15	4.0	–	730	97
21	2212	2789	32	1.4	PH931_0060K513_0240 EZ703U	4500	–	9000	146.1	11687/80	2800	2500	4200	25	4.0	–	730	99
26	789	885	13	3.8	PH931_0060K513_0195 EZ701U	2130	–	8670	116.1	27869/240	2800	2500	4200	13	4.0	–	730	95
26	1279	1535	21	2.3	PH931_0060K513_0195 EZ702U	4370	–	8670	116.1	27869/240	2800	2500	4200	18	4.0	–	730	97
26	1439	1705	24	2.1	PH931_0060K513_0195 EZ505U	4500	–	8670	116.1	27869/240	2800	2500	4200	16	4.0	–	730	97
26	1758	2217	29	1.7	PH931_0060K513_0195 EZ703U	4500	–	8670	116.1	27869/240	2800	2500	4200	26	4.0	–	730	99
26	2270	3218	38	1.3	PH931_0060K513_0195 EZ705U	4500	–	9000	116.1	27869/240	2800	2500	4200	38	4.0	–	730	105
31	656	736	13	4.6	PH931_0060K513_0160 EZ701U	1770	–	7210	96.56	26071/270	2300	2200	3600	14	4.0	–	730	95
31	1063	1276	20	2.8	PH931_0060K513_0160 EZ702U	3630	–	7210	96.56	26071/270	2300	2200	3600	19	4.0	–	730	97
31	1196	1418	23	2.5	PH931_0060K513_0160 EZ505U	4500	–	7210	96.56	26071/270	2300	2200	3600	18	4.0	–	730	97
31	1462	1843	28	2.1	PH931_0060K513_0160 EZ703U	4500	–	7210	96.56	26071/270	2300	2200	3600	27	4.0	–	730	99
31	1888	2676	36	1.6	PH931_0060K513_0160 EZ705U	4500	–	9000	96.56	26071/270	2300	2200	3600	39	4.0	–	730	105
31	1976	3288	38	1.5	PH931_0060K513_0160 EZ802U	4500	–	9000	96.56	26071/270	2300	2200	3600	63	4.0	–	730	113
39	1502	2130	34	2.0	PH931_0060K513_0130 EZ705U	4500	–	9000	76.85	1537/20	2300	2200	3600	42	4.0	–	730	105
39	1573	2617	35	1.9	PH931_0060K513_0130 EZ802U	4500	–	9000	76.85	1537/20	2300	2200	3600	66	4.0	–	730	113
39	1876	3399	42	1.6	PH931_0060K513_0130 EZ803U	4500	–	9000	76.85	1537/20	2300	2200	3600	91	4.0	–	730	119
49	1190	1688	31	2.5	PH931_0060K513_0100 EZ705U	4500	–	9000	60.90	609/10	1900	1800	3200	45	4.0	–	730	105
49	1246	2074	33	2.4	PH931_0060K513_0100 EZ802U	4500	–	9000	60.90	609/10	1900	1800	3200	69	4.0	–	730	113
49	1487	2694	39	2.0	PH931_0060K513_0100 EZ803U	4500	–	9000	60.90	609/10	1900	1800	3200	94	4.0	–	730	119
61	954	1353	29	3.1	PH931_0060K513_0081 EZ705U	4500	–	9000	48.80	17081/350	1900	1800	3200	49	4.0	–	730	105
61	999	1662	31	3.0	PH931_0060K513_0081 EZ802U	4480	–	9000	48.80	17081/350	1900	1800	3200	73	4.0	–	730	113
61	1191	2159	37	2.5	PH931_0060K513_0081 EZ803U	4500	–	9000	48.80	17081/350	1900	1800	3200	98	4.0	–	730	119
74	794	1125	27	3.0	PH931_0040K513_0100 EZ705U	3840	–	7500	40.60	203/5	1900	1800	3200	45	4.5	–	525	105
74	831	1382	28	2.8	PH931_0040K513_0100 EZ802U	3730	–	7500	40.60	203/5	1900	1800	3200	69	4.5	–	525	113
74	991	1796	33	2.4	PH931_0040K513_0100 EZ803U	3840	–	7500	40.60	203/5	1900	1800	3200	95	4.5	–	525	119
92	636	902	27	3.4	PH931_0040K513_0081 EZ705U	3110	–	6480	32.54	17081/525	1900	1800	3200	49	4.5	–	525	105
92	666	1108	28	3.3	PH931_0040K513_0081 EZ802U	2990	–	6480	32.54	17081/525	1900	1800	3200	73	4.5	–	525	113
92	794	1439	33	2.8	PH931_0040K513_0081 EZ803U	3840	–	6480	32.54	17081/525	1900	1800	3200	99	4.5	–	525	119
PH931K (n_{1N} = 4500 rpm, $M_{2acc,max}$ = 4500 Nm)																		
19	2016	3246	21	1.5	PH931_0060K513_0390 EZ505U	4500	–	9000	231.2	8091/35	3400	3000	5000	14	4.0	–	730	97
23	1690	2722	20	1.8	PH931_0060K513_0320 EZ505U	4500	–	9000	193.8	62031/320	3400	3000	5000	14	4.0	–	730	97
PH1031K (n_{1N} = 2000 rpm, $M_{2acc,max}$ = 7500 Nm)																		
21	3818	5776	49	1.3	PH1031_0060K613_0160 EZ805U	7500	–	15000	95.21	54839/576	2200	2000	3500	143	4.0	–	1210	177
26	3039	4597	45	1.6	PH1031_0060K613_0125 EZ805U	7500	–	15000	75.77	9699/128	2200	2000	3500	147	4.0	–	1210	177
41	1951	2951	40	2.5	PH1031_0060K613_0081 EZ805U	7500	–	15000	48.64	255285/5248	1800	1700	3000	161	4.0	–	1210	177
PH1031K (n_{1N} = 3000 rpm, $M_{2acc,max}$ = 7500 Nm)																		
6.6	1803	1971	7.6	2.8	PH1031_0060K613_0760 EZ501U	6710	–	9380	456.8	380091/832	3100	2800	4500	3.7	4.0	–	1210	136
6.6	3103	3354	13	1.6	PH1031_0060K613_0760 EZ502U	6920	–	9380	456.8	380091/832	3100	2800	4500	6.0	4.0	–	1210	137
6.6	3103	3480	13	1.6	PH1031_0060K613_0760 EZ701U	7500	–	15000	456.8	380091/832	3100	2800	4500	9.3	4.0	–	1210	139
6.6	4067	4654	17	1.2	PH1031_0060K613_0760 EZ503U	6920	–	9380	456.8	380091/832	3100	2800	4500	8.4	4.0	–	1210	139
7.8	2596	2912	12	1.9	PH1031_0060K613_0640 EZ701U	7020	–	15000	382.3	391437/1024	3100	2800	4500	9.6	4.0	–	1210	139
7.8	4210	5052	20	1.2	PH1031_0060K613_0640 EZ702U	7500	–	15000	382.3	391437/1024	3100	2800	4500	15	4.0	–	1210	142
7.8	4736	5613	23	1.1	PH1031_0060K613_0640 EZ505U	7500	–	15000	382.3	391437/1024	3100	2800	4500	13	4.0	–	1210	142
10	1945	2181	11	2.6	PH1031_0060K613_0480 EZ701U	5260	–	14340	286.4	119133/416	3100	2800	4500	10	4.0	–	1210	139
10	3154	3785	19	1.6	PH1031_0060K613_0480 EZ702U	7500	–	14340	286.4	119133/416	3100	2800	4500	16	4.0	–	1210	142
10	3548	4205	21	1.4	PH1031_0060K613_0480 EZ505U	7500	–	14340	286.4	119133/416	3100	2800	4500	14	4.0	–	1210	142
10	4337	5467	25	1.2	PH1031_0060K613_0480 EZ703U	7500	–	14340	286.4	119133/416	3100	2800	4500	24	4.0	–	1210	144
13	1561	1751	11	3.2	PH1031_0060K613_0380 EZ701U	4220	–	13590	229.9	470859/2048	3100	2800	4500	11	4.0	–	1210	139
13	2532	3038	17	2.0	PH1031_0060K613_0380 EZ702U	7500	–	13590	229.9	470859/2048	3100	2800	4500	16	4.0	–	1210	142
13	2849	3376	20	1.8	PH1031_0060K613_0380 EZ505U	7500	–	13590	229.9	470859/2048	3100	2800	4500	15	4.0	–	1210	142
13	3482	4389	24	1.4	PH1031_0060K613_0380 EZ703U	7500	–	13590	229.9	470859/2048	3100	2800	4500	24	4.0	–	1210	144

n_{2N} [rpm]	M_{2N} [Nm]	$M_{2,0}$ [Nm]	a_{th}	S	Type	M_{2acc} [Nm]	M_{2accHT} [Nm]	M_{2NOT} [Nm]	i	i_{exakt}	n_{1maxDB} EL1,2 [rpm]	n_{1maxDB} EL3,4,5,6 [rpm]	n_{1maxZB} [rpm]	J_1 [kgcm²]	$\Delta\varphi_2$ [arcmin]	$\Delta\varphi_{2red}$ [arcmin]	C_2 [Nm/arcmin]	m [kg]
PH1031K (n_{1N} = 3000 rpm, $M_{2acc,max}$ = 7500 Nm)																		
16	1298	1456	10	3.9	PH1031_0060K613_0320 EZ701U	3510	–	12520	191.1	391437/2048	3100	2800	4500	12	4.0	–	1210	139
16	2105	2526	16	2.4	PH1031_0060K613_0320 EZ702U	7190	–	12520	191.1	391437/2048	3100	2800	4500	17	4.0	–	1210	142
16	2368	2807	18	2.1	PH1031_0060K613_0320 EZ505U	7500	–	12520	191.1	391437/2048	3100	2800	4500	16	4.0	–	1210	142
16	2894	3649	23	1.7	PH1031_0060K613_0320 EZ703U	7500	–	12520	191.1	391437/2048	3100	2800	4500	25	4.0	–	1210	144
16	3736	5297	29	1.3	PH1031_0060K613_0320 EZ705U	7500	–	15000	191.1	391437/2048	3100	2800	4500	38	4.0	–	1210	149
21	2816	3992	27	1.8	PH1031_0060K613_0240 EZ705U	7500	–	15000	144.0	73749/512	2600	2300	4000	40	4.0	–	1210	149
21	2948	4904	28	1.7	PH1031_0060K613_0240 EZ802U	7500	–	15000	144.0	73749/512	2600	2300	4000	64	4.0	–	1210	157
26	1255	1506	14	4.0	PH1031_0060K613_0190 EZ702U	4290	–	8510	114.0	51057/448	2600	2300	4000	22	4.0	–	1210	142
26	1412	1673	16	3.5	PH1031_0060K613_0190 EZ505U	6270	–	8510	114.0	51057/448	2600	2300	4000	20	4.0	–	1210	142
26	1726	2176	19	2.9	PH1031_0060K613_0190 EZ703U	6270	–	8510	114.0	51057/448	2600	2300	4000	29	4.0	–	1210	144
26	2228	3159	25	2.2	PH1031_0060K613_0190 EZ705U	7500	–	15000	114.0	51057/448	2600	2300	4000	42	4.0	–	1210	149
26	2332	3880	26	2.1	PH1031_0060K613_0190 EZ802U	7500	–	15000	114.0	51057/448	2600	2300	4000	66	4.0	–	1210	157
26	2782	5041	31	1.8	PH1031_0060K613_0190 EZ803U	7500	–	15000	114.0	51057/448	2600	2300	4000	91	4.0	–	1210	164
32	1861	2639	24	2.7	PH1031_0060K613_0160 EZ705U	7500	–	15000	95.21	54839/576	2200	2000	3500	44	4.0	–	1210	149
32	1949	3242	25	2.6	PH1031_0060K613_0160 EZ802U	7500	–	15000	95.21	54839/576	2200	2000	3500	68	4.0	–	1210	157
32	2324	4212	30	2.2	PH1031_0060K613_0160 EZ803U	7500	–	15000	95.21	54839/576	2200	2000	3500	94	4.0	–	1210	164
40	1481	2100	22	3.4	PH1031_0060K613_0125 EZ705U	7230	–	15000	75.77	9699/128	2200	2000	3500	48	4.0	–	1210	149
40	1551	2580	23	3.2	PH1031_0060K613_0125 EZ802U	6950	–	15000	75.77	9699/128	2200	2000	3500	73	4.0	–	1210	157
40	1850	3352	28	2.7	PH1031_0060K613_0125 EZ803U	7500	–	15000	75.77	9699/128	2200	2000	3500	98	4.0	–	1210	164
62	951	1348	22	4.6	PH1031_0060K613_0081 EZ705U	4640	–	9690	48.64	255285/5248	1800	1700	3000	62	4.0	–	1210	149
62	996	1656	23	4.4	PH1031_0060K613_0081 EZ802U	4460	–	9690	48.64	255285/5248	1800	1700	3000	86	4.0	–	1210	157
62	1187	2152	28	3.7	PH1031_0060K613_0081 EZ803U	6470	–	15000	48.64	255285/5248	1800	1700	3000	111	4.0	–	1210	164
PH1031K (n_{1N} = 4500 rpm, $M_{2acc,max}$ = 7500 Nm)																		
12	3333	5368	16	1.5	PH1031_0060K613_0640 EZ505U	7500	–	15000	382.3	391437/1024	3100	2800	4500	13	4.0	–	1210	142
16	2497	4021	15	2.0	PH1031_0060K613_0480 EZ505U	7500	–	14340	286.4	119133/416	3100	2800	4500	14	4.0	–	1210	142
16	3180	5257	19	1.6	PH1031_0060K613_0480 EZ703U	7500	–	14340	286.4	119133/416	3100	2800	4500	24	4.0	–	1210	144
20	2005	3228	14	2.5	PH1031_0060K613_0380 EZ505U	7500	–	13590	229.9	470859/2048	3100	2800	4500	15	4.0	–	1210	142
20	2553	4220	18	2.0	PH1031_0060K613_0380 EZ703U	7500	–	13590	229.9	470859/2048	3100	2800	4500	24	4.0	–	1210	144
24	1666	2684	13	3.0	PH1031_0060K613_0320 EZ505U	7500	–	12520	191.1	391437/2048	3100	2800	4500	16	4.0	–	1210	142
24	2122	3508	17	2.4	PH1031_0060K613_0320 EZ703U	7500	–	12520	191.1	391437/2048	3100	2800	4500	25	4.0	–	1210	144
24	2877	5262	22	1.7	PH1031_0060K613_0320 EZ705U	7500	–	15000	191.1	391437/2048	3100	2800	4500	38	4.0	–	1210	149

13.3 Dimensional drawings

In this chapter you can find the dimensions of the geared motors.

There is a dimensional drawing for every possible shaft/housing design, each with the tables for gear unit dimensions, motor dimensions and geared motor dimensions.

Dimensions can exceed the specifications of ISO 2768-mK due to casting tolerances or accumulation of individual tolerances.

We reserve the right to make dimensional changes due to ongoing technical development.

You can download 3D models of our standard drives at http://configurator.stoeber.de.

Combination options and the dimensions of forced ventilated geared motors can also be found at http://configurator.stoeber.de.

13.3.1 F shaft design (flange shaft)

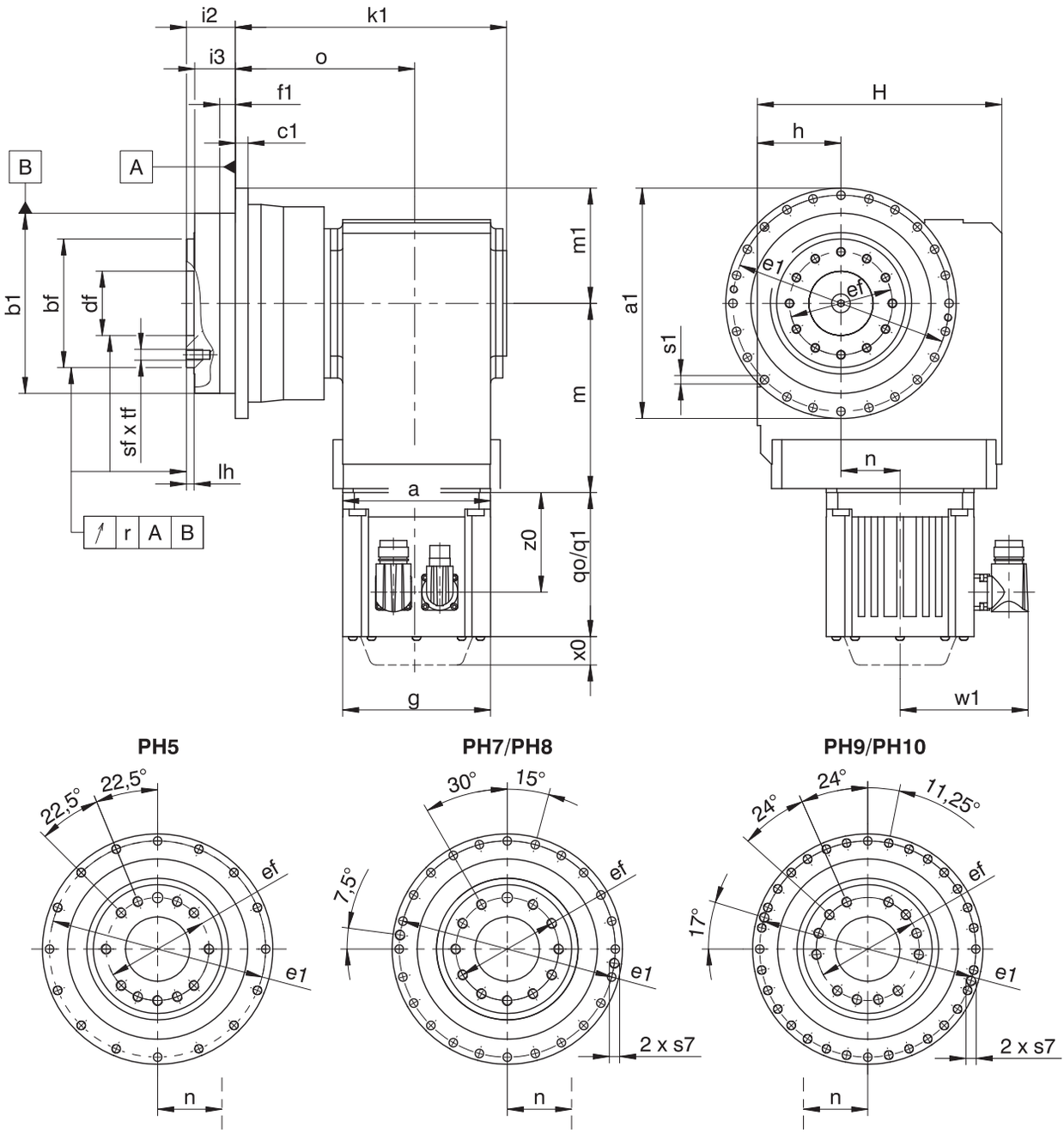

q0	Applies to motors without brake.	q1	Applies to motors with brake.
x0	Applies to encoders using an optical measuring method.	w1	Different for the One Cable Solution (OCS), see the chapter [▸ 17.4]

Dimensions of gear units

Type	Øa1	Øb1	Øbf	c1	Ødf	Øe1	Øef	f1	h	H	i2	i3	k1	lh	m1	o	r	Øs1	s7	sf	tf
PH531_K102_	145_{h7}	110_{h7}	80_{h7}	8	40^{H6}	135	63	12	60	160	29	23	180.0	6	72.5	124.0	0.020	5.5	–	M6	11
PH731_K102_	179_{h7}	140_{h7}	100_{h7}	10	50^{H6}	168	80	12	60	160	38	32	183.0	6	89.5	127.0	0.025	6.6	–	M8	14
PH731_K202_	179_{h7}	140_{h7}	100_{h7}	10	50^{H6}	168	80	12	65	190	38	32	211.0	6	89.5	141.0	0.025	6.6	–	M8	14
PH831_K202_	247_{h7}	200_{h7}	160_{h7}	12	80^{H6}	233	125	15	65	190	50	42	246.0	8	123.5	176.0	0.030	9.0	M10	M10	18
PH831_K302_	247_{h7}	200_{h7}	160_{h7}	12	80^{H6}	233	125	15	75	213	50	42	259.5	8	123.5	183.5	0.030	9.0	M10	M10	18
PH931_K513_	300	255_{h7}	180_{h7}	18	90^{H6}	280	140	20	160	260	66	55	292.5	12	150.0	196.5	0.030	13.5	M8	M16	24
PH1031_K613_	330	285_{h7}	200_{h7}	20	95^{H6}	310	160	20	190	310	75	60	318.5	10	165.0	215.0	0.040	13.5	M10	M20	30

Dimensions of motors

Type	□g	q0	q1	w1	x0	z0
EZ301U	72	114.0	154.0	55.5	21	78.5
EZ302U	72	136.0	176.0	55.5	21	100.5
EZ303U	72	158.0	198.0	55.5	21	122.5
EZ401U	98	118.5	167.0	91.0	22	76.5
EZ402U	98	143.5	192.0	91.0	22	101.5
EZ404U	98	193.5	242.0	91.0	22	151.5
EZ501U	115	112.0	166.5	100.0	22	77.5
EZ502U	115	137.0	191.5	100.0	22	102.5
EZ503U	115	162.0	216.5	100.0	22	127.5
EZ505U	115	212.0	266.5	100.0	22	177.5
EZ701U	145	125.0	184.0	115.0	22	87.0
EZ702U	145	150.0	209.0	115.0	22	112.0
EZ703U	145	175.0	234.0	115.0	22	137.0
EZ705U	145	230.0	289.0	134.0	22	188.0
EZ802U	190	232.5	309.5	156.5	22	178.5
EZ803U	190	273.5	350.5	156.5	22	219.5
EZ805U	190	355.5	432.5	156.5	22	301.5

Dimensions of geared motors

Type	EZ3			EZ4			EZ5			EZ7			EZ8		
	a	m	n	a	m	n	a	m	n	a	m	n	a	m	n
PH531_K102_	□72	124	36.0	□98	124	36.0	□115	128	36.0	□145	130	36.0	–	–	–
PH731_K102_	□72	124	36.0	□98	124	36.0	□115	128	36.0	□145	130	36.0	–	–	–
PH731_K202_	□72	143	46.0	□98	143	46.0	□115	147	46.0	□145	149	46.0	–	–	–
PH831_K202_	□72	143	46.0	□98	143	46.0	□115	147	46.0	□145	149	46.0	–	–	–
PH831_K302_	–	–	–	∅140	163	52.5	□115	167	52.5	□145	169	52.5	–	–	–
PH931_K513_	–	–	–	–	–	–	∅160	172	15.0	□145	174	15.0	□190	177	15.0
PH1031_K613_	–	–	–	–	–	–	∅160	191	18.0	∅200	193	18.0	□190	196	18.0

13.4 Type designation

13.4.1 Type designation PH5K_ – PH8K_

In this chapter, you can find an explanation of the type designation with the associated options.

Additional ordering information not included in the type designation can be found at the end of the chapter.

Example code

PH	**7**	**3**	**1**	**S**	**F**	**S**	**S**	**0100**	**K102VF**	**0115**	**EZ302U**

Explanation

Code	Designation	Design
PH	Type	Planetary gear unit
7	Size	7 (example)
3	Generation	Generation 3
1	Stages	Single-stage
S	Housing	Standard
F	Shaft	Flange shaft
S V	Bearing	Standard bearing Reinforced bearing (PH3 – PH5)
S R	Backlash	Standard Reduced
0100	Transmission ratio of output (i x 10)	i = 10 (example)
K102VF	Input	K1 right-angle geared motor (example)
0115	Transmission ratio of input (i x 10 rounded)	i = 11.57 (example)
EZ302U	Motor	EZ synchronous servo motor

To complete the type designation, also specify the following in your order:

- For a detailed type designation of the motor, see the chapter [▸ 17]
- For the mounting position, see the chapter [▸ 13.5.3]
- Output gear unit side 3 or 4, see the chapter [▸ 13.5.3]
- Radial shaft seal rings at the output made of NBR or FKM (option), see the chapter [▸ 13.6.3]
- Position of the plug connectors, see the chapter [▸ 13.5.5]
- Reverse operation of the output shaft from ±20° to ±90° and horizontal installation, note the chapter Reverse operation

13.4.2 Type designation PH9K_ – PH10K_

In this chapter, you can find an explanation of the type designation with the associated options.

Additional ordering information not included in the type designation can be found at the end of the chapter.

Example code

PH	9	3	1	F	0040	K513VF	0100	EZ802U

Explanation

Code	Designation	Design
PH	Type	Planetary gear unit
9	Size	9 (example)
3	Generation	Generation 3
1	Stages	Single-stage
F	Shaft	Flange shaft
0040	Transmission ratio of output (i x 10)	i = 4 (example)
K513VF	Input	K5 right-angle gear unit (example)
0100	Transmission ratio of input (i x 10)	i = 10 (example)
EZ802U	Motor	EZ synchronous servo motor

To complete the type designation, also specify the following in your order:

- For a detailed type designation of the motor, see the chapter [▸ 17]
- For the mounting position, see the chapter [▸ 13.5.3]
- Output gear unit side 3 or 4, see the chapter [▸ 13.5.3]
- Radial shaft seal rings at the output made of NBR or FKM (option), see the chapter [▸ 13.6.3]
- Position of the plug connectors, see the chapter [▸ 13.5.5]
- Reverse operation of the output shaft from ±20° to ±90° and horizontal installation, note the chapter Reverse operation

13.4.3 Nameplate

An example gear unit nameplate is explained in the figure below.

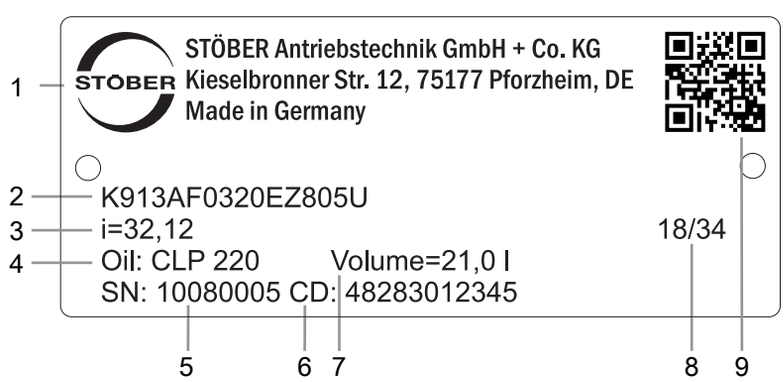

Code	Designation
1	Name of manufacturer
2	Type designation
3	Gear ratio of the gear unit
4	Lubricant specification
5	Serial number of the gear unit
6	Customer-specific data
7	Lubricant fill volume
8	Date of manufacture (year/calendar week)
9	QR code (link to product information)

13.4.3.1 Supporting documents

You can view or download supporting documents for the product by reading off the serial number on the nameplate of the product and entering it at the following address online:
https://id.stober.com

Alternatively, you can use a suitable mobile device to scan in the QR code on the nameplate of the product in order to be linked to the supporting documents.

13.5 Product description

13.5.1 Input options

EZ synchronous servo motor

http://www.stoeber.de/en/PHKEZ

13.5.2 Installation conditions

The torque and force values listed in this catalog are valid under the following conditions:

- When the flange shaft and gear housing are fastened on the machine side using screws of strength class 12.9
- When the gear housings are adjusted at pilot øb1. The machine-side fit must be H7.
- When the flange shaft is adjusted using the connecting element at pilot øbf or ødf

13.5.3 Mounting positions

The following table shows the standard mounting positions.

The numbers identify the gear unit sides. The mounting position is defined by the gear side facing downwards.

EL1	EL2	EL3
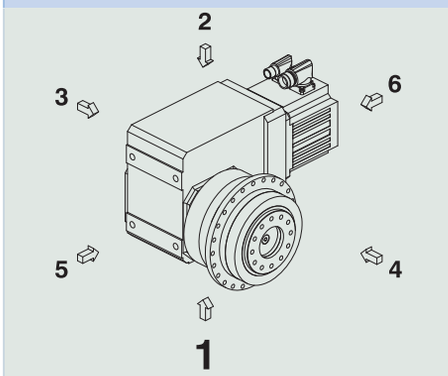	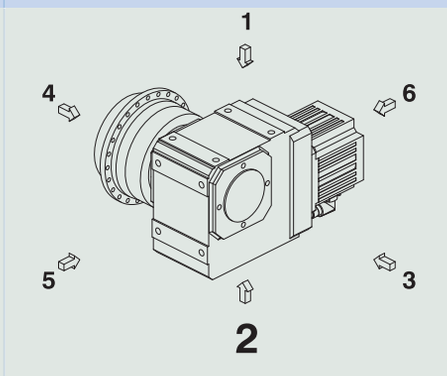	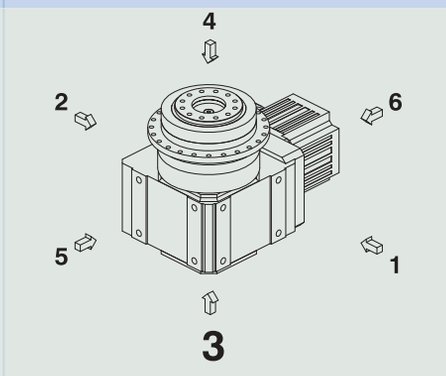
EL4	**EL5**	**EL6**
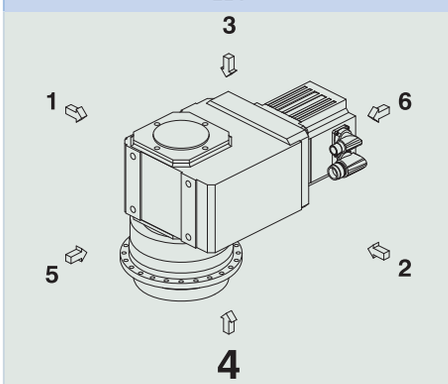	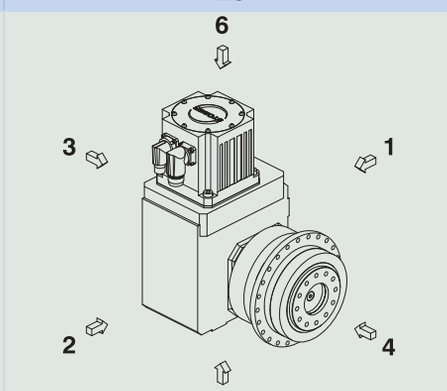	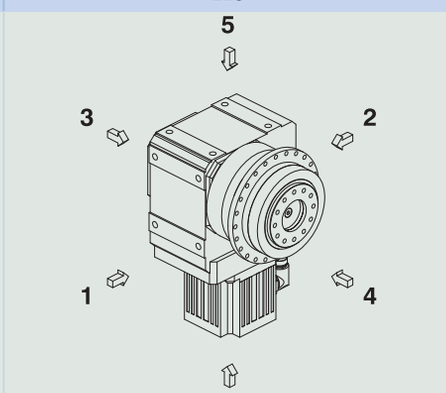

Since the lubricant filling volume of the gear unit depends on the mounting position, the mounting position must be specified when ordering.

13.5.4 Lubricants

STOBER fills the gear units with the amount and type of lubricant specified on the nameplate. The filling volume and the structure of the gear units depend on the mounting position.

Only install the gear units in the intended mounting position! Reposition the gear units only after consulting STOBER. Otherwise, STOBER assumes no liability for the gear units.

You will receive lubricants for use in the food industry upon request.

13.5.5 Position of the plug connectors

Mounting position EL1 Plug connector in 270° position (standard)	Mounting position EL4 Plug connector in 270° position (standard)
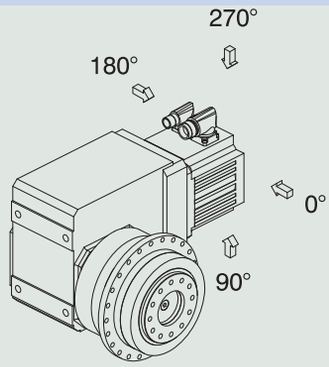	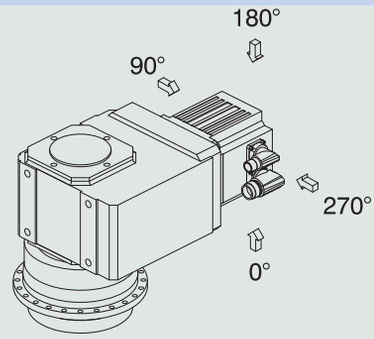

Indicate variations for your geared motor in the order.

Note that the plug connector position rotates along with the geared motor if the geared motor is in another mounting position.

13.5.6 Other product features

Feature	Value
Max. permitted gear unit temperature (on the surface of the gear unit)	≤ 90 °C
Paint	Black RAL 9005
Explosion-proof design in accordance with (ATEX) Directive 2014/34/EU (optional)	Not available
Efficiency:	
η_{get} three-stage	93%
η_{get} four-stage	92%
Protection class:[1]	
Gear unit	IP65
Motor	IP56, optionally IP66

13.5.7 Direction of rotation

Output side 4	Output side 3
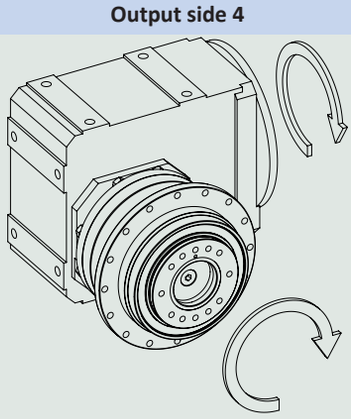	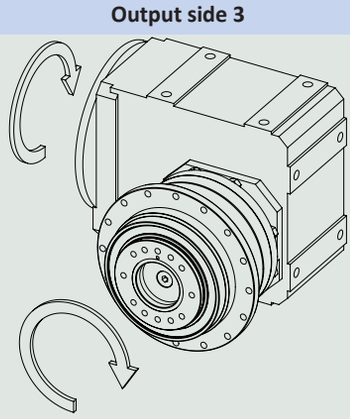

The pictures show mounting position EL1.

13.6 Project configuration

Project your drives using our SERVOsoft designing software. Download SERVOsoft for free at https://www.stoeber.de/en/ServoSoft.

Observe the limit conditions in this chapter to ensure a safe design for your drives.

An explanation of the formula symbols can be found in Chapter [▶ 23.1].

[1] Observe the protection class of all the components.

The formula symbols for values actually present in the application are marked with *.

13.6.1 Calculation of the operating point

Check the following conditions for operating points other than the nominal point M_{2N} specified in the selection tables.

For continuous operation in mounting positions EL1, EL2:

$$n_{1m*} \leq \frac{n_{1maxDBEL1,2}}{fB_T}$$

For continuous operation in mounting positions EL3, EL4, EL5, EL6:

$$n_{1m*} \leq \frac{n_{1maxDBEL3,4,5,6}}{fB_T}$$

For all mounting positions:

$$n_{1max*} \leq \frac{n_{1maxZB}}{fB_T}$$

$$M_{2eff*} \leq M_{2th}$$

$$M_{2acc*} \leq \frac{M_{2acc}}{fB_{ZB}}$$

$$M_{2NOT*} \leq M_{2NOT}$$

$$M_{2eq*} \leq M_{2N} \cdot \frac{S}{fB_{op} \cdot fB_t}$$

Refer to the selection tables for the values for $n_{1maxDBEL1,2}$ and $n_{1maxDBEL3,4,5,6}$, n_{1maxZB}, M_{2acc} (M_{2accHT} for reduced backlash), M_{2NOT}, M_{2N} and S.

The values for fB_T, fB_{op}, fB_t and fB_{ZB} can be found in the corresponding tables in this chapter.

Calculate the thermal limit torque M_{2th} for a duty cycle > 50%.

Example of cyclic operation

The following calculations are based on a representation of the power taken from the output based in accordance with the following example:

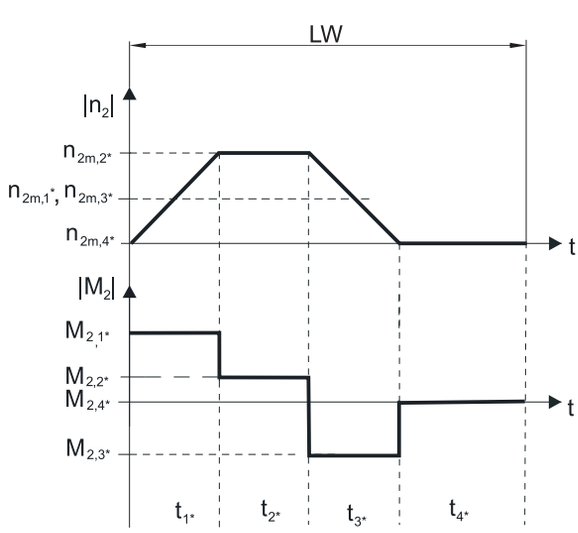

Calculation of the actual average input speed

$$n_{1m*} = n_{2m*} \cdot i$$

$$n_{2m*} = \frac{|n_{2m,1*}| \cdot t_{1*} + \ldots + |n_{2m,n*}| \cdot t_{n*}}{t_{1*} + \ldots + t_{n*}}$$

If $t_{1*} + ... + t_{3*} \geq 6$ min, calculate n_{2m*} without the rest phase t_{4*}.

The values for the ratio i can be found in the selection tables.

Calculation of the actual effective torque

$$M_{2eff*} = \sqrt{\frac{t_{1*} \cdot M_{2,1*}^{2} + ... + t_{n*} \cdot M_{2,n*}^{2}}{t_{1*} + ... + t_{n*}}}$$

Calculation of the actual equivalent torque

$$M_{2eq*} = \sqrt[3]{\frac{\left|n_{2m,1*}\right| \cdot t_{1*} \cdot \left|M_{2,1*}^{3}\right| + ... + \left|n_{2m,n*}\right| \cdot t_{n*} \cdot \left|M_{2,n*}^{3}\right|}{\left|n_{2m,1*}\right| \cdot t_{1*} + ... + \left|n_{2m,n*}\right| \cdot t_{n*}}}$$

Calculation of the thermal limit torque

Calculate the thermal limit torque M_{2th} for a duty cycle $ED_{10} > 50\%$ and the actual average input speed n_{1m*}. (At $K_{mot,th} \leq 0$ you must reduce the average input speed n_{1m*} accordingly or select another geared motor size.)

$$M_{2th} = M_{op} \cdot i \cdot K_{mot,th}$$

$$K_{mot,th} = 0{,}93 - \frac{a_{th}}{1000} \cdot athEL \cdot fB_T \cdot \left(\frac{n_{1m*}}{1000}\right)^2$$

The values for i and a_{th} can be found in the selection tables.

The values for a_{thEL} and fB_T can be found in the corresponding tables in this chapter.

The value for the torque of the motor at operating point M_{op} with the determined average input speed n_{1m*} can be found in the motor curve of Chapter [▶ 17.3]. Note the size, nominal speed n_N and cooling type of the motor. The figure below shows an example of reading the torque M_{op} of a motor with convection cooling at the operating point.

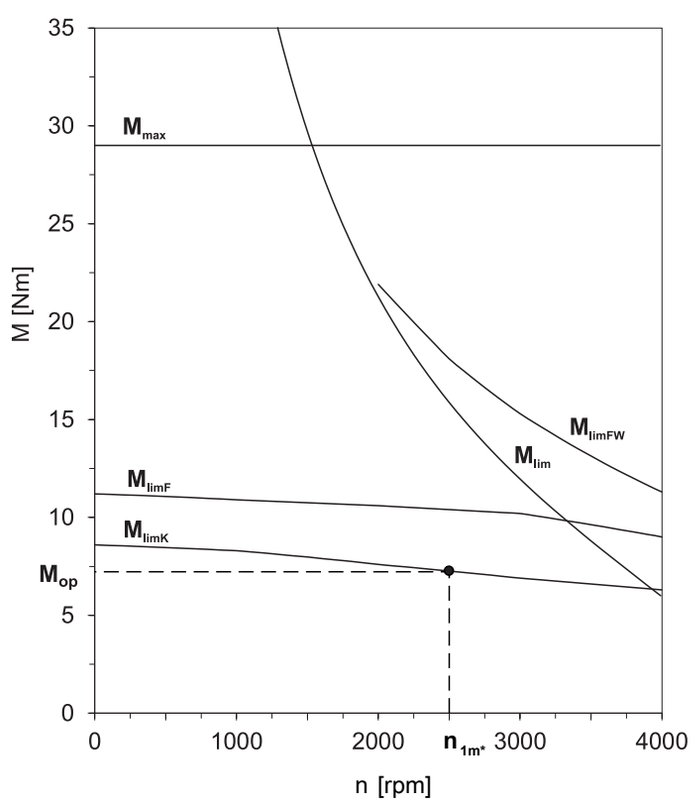

Operating factors

Parameter a_{thEL}

Mounting position	a_{thEL}
EL1, 2	1.0
EL3, 4, 5, 6	1.1

Operating mode	fB_{op}
Uniform continuous operation	1.00
Cyclic operation	1.25
Reversing load cyclic operation	1.40

Run time	fB_t
Daily runtime ≤ 8 h	1.00
Daily runtime ≤ 16 h	1.15
Daily runtime ≤ 24 h	1.20

Cyclic operation	fB_{ZB}
≤ 1000 load changes/hour (LW/h)	1.00
> 1000 load changes/hour (LW/h)	1.15

Temperature		fB_T
Motor cooling	**Surrounding temperature**	
Motor with forced ventilation	≤ 20 °C	0.9
	≤ 30 °C	1.0
	≤ 40 °C	1.15
Motor with convection cooling	≤ 20 °C	1.0
	≤ 30 °C	1.1
	≤ 40 °C	1.25

Notes

- The maximum permitted gear unit temperature (see the "Other product features" chapter) must not be exceeded. Doing so may result in damage to the geared motor.
- For braking from full speed (for example when the power fails or when setting up the machine), note the permitted gear unit torques (M_{2acc}, M_{2NOT}) in the selection tables.

13.6.2 Permitted shaft loads for the output shaft

The values specified in the tables apply to the permitted shaft loads:

- For shaft dimensions in accordance with the catalog
- For output speeds n_{2m*} ≤ 100 rpm ($F^{2axN} = F_{2ax100}$; $F_{2radN} = F_{2rad100}$; $M_{2kN} = M_{2k100}$)
- Only if radial forces on the gear unit are stabilized by its pilots (housing, flange shaft)

Permitted shaft loads for standard bearing S

Type	z_2 [mm]	F_{2ax100} [N]	$F_{2rad100}$ [N]	$F_{2rad,acc}$ [N]	M_{2k100} [Nm]	$M_{2k,acc}$ [Nm]	C_{2k} [Nm/arcmin]
PH3	62.5	1650	1613	1613	101	101	75
PH4	83.0	2150	3095	3571	257	296	192
PH5	97.0	4150	4536	4897	440	475	429
PH7	86.0	6150	17045	17045	1466	1466	500
PH8	125.5	10050	27778	27778	3486	3486	1550
PH9	155.0	33000	48387	70968	7500	11000	7500
PH10	171.0	50000	51462	73099	8800	12500	9500

Permitted shaft loads for reinforced bearing V

Type	z_2 [mm]	F_{2ax100} [N]	$F_{2rad100}$ [N]	$F_{2rad,acc}$ [N]	M_{2k100} [Nm]	$M_{2k,acc}$ [Nm]	C_{2k} [Nm/arcmin]
PH3	66.5	2200	2250	2250	150	150	80
PH4	88.5	2900	4000	4000	354	354	217
PH5	104.0	5000	5500	5500	572	572	478

For other output speeds, download diagrams at http://configurator.stoeber.de.

The following applies to output speeds n_{2m*} > 100 rpm:

$$F_{2axN} = \frac{F_{2ax100}}{\sqrt[3]{\frac{n_{2m*}}{100\ \text{rpm}}}} \qquad F_{2radN} = \frac{F_{2rad100}}{\sqrt[3]{\frac{n_{2m*}}{100\ \text{rpm}}}} \qquad M_{2kN} = \frac{M_{2k100}}{\sqrt[3]{\frac{n_{2m*}}{100\ \text{rpm}}}}$$

The values for F_{2ax100}, $F_{2rad100}$ and M_{2k100} can be found in the table "Permitted shaft loads" in this chapter.

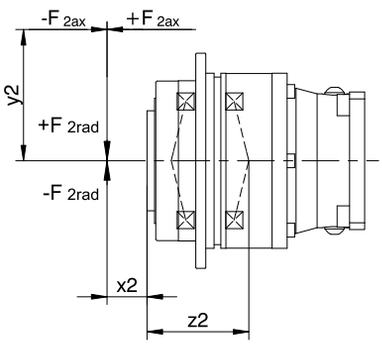

Fig. 1: Force application points

You can determine the permitted radial forces from the permitted breakdown torque M_{2kN} and $M_{2k,acc}$. The actual radial forces may not exceed the permitted radial forces. The permitted radial forces pertain to the shaft end (x2 = 0).

$$M_{2k,acc*} = \frac{2 \cdot F_{2ax*} \cdot y_2 + F_{2rad,acc*} \cdot (x_2 + z_2)}{1000} \leq M_{2k,acc}$$

For applications with multiple axial and/or radial forces, you must add the forces as vectors.

In the event of EMERGENCY OFF operation (max. 1000 load changes), you can multiply the permitted forces and torques for F_{2ax100}, $F_{2rad100}$ and M_{2k100} by a factor of two.

Also note the calculation for equivalent values:

$$M_{2k,eq*} = \sqrt[3]{\frac{|n_{2m,1*}| \cdot t_{1*} \cdot |M_{2k,acc,1*}{}^3| + \ldots + |n_{2m,n*}| \cdot t_{n*} \cdot |M_{2k,acc,n*}{}^3|}{|n_{2m,1*}| \cdot t_{1*} + \ldots + |n_{2m,n*}| \cdot t_{n*}}} \leq M_{2kN}$$

$$F_{2rad,eq*} = \sqrt[3]{\frac{|n_{2m,1*}| \cdot t_{1*} \cdot |F_{2rad,acc,1*}{}^3| + \ldots + |n_{2m,n*}| \cdot t_{n*} \cdot |F_{2rad,acc,n*}{}^3|}{|n_{2m,1*}| \cdot t_{1*} + \ldots + |n_{2m,n*}| \cdot t_{n*}}} \leq F_{2radN}$$

$$F_{2ax,eq*} \leq F_{2axN}$$

The following apply to the bearing service life L_{10h} (ED_{10} ≤ 40%):

L_{10h} > 10000 h with 1 < M_{2kN}/M_{2k*} < 1.25

L_{10h} > 20000 h with 1.25 < M_{2kN}/M_{2k*} < 1.5

L_{10h} > 30000 h with 1.5 < M_{2kN}/M_{2k*}

For different duty cycles:

$$L_{10h} > L_{10h(ED_{10}=40\%)} \cdot \frac{40\%}{ED_{10}}$$

13.6.3 Recommendation for radial shaft seal rings

For a duty cycle > 60% and higher surrounding temperatures, we recommend radial shaft seal rings made of FKM at the output.

Properties:

- Excellent temperature resistance
- High chemical stability
- Very good resistance to aging
- Excellent resistance in oils and greases
- For use in the food, beverage and pharmaceutical industries

Leak-proofness

Our gear units are equipped with high-quality radial shaft seal rings and checked for leaks. However, a leak cannot be fully ruled out over the length of use of a gear unit. If you use a gear unit with goods incompatible with the lubricant, you must take measures to prevent direct contact with the gear unit lubricant in case of a leak.

13.6.4 Reverse operation

To ensure lubrication for circulating gearing parts during cyclic reverse operation from ± 20° to ± 90° at the output, pay careful attention to the position of the output shaft for the horizontal mounting of the gear unit, as shown in the diagrams below.

The images show the center position of reverse operation.

Cyclic reverse operation ≤ ± 20° on request.

Size 3 – 10

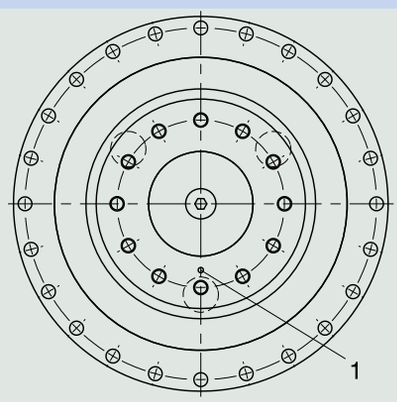

1 Position of the mark: bottom

Please note that the hole pattern may be different, depending on the size of the planetary gear unit.

13.7 Additional documentation

Additional documentation related to the product can be found at
http://www.stoeber.de/en/downloads/

Enter the ID of the documentation in the Search... field.

Documentation	ID
Operating manual for KL/KS/PHK/PHKX/PHQK/PK/PKX right-angle servo gear units and right-angle servo geared motors	443150_en

14 PHQK right-angle planetary geared motors

Table of contents

14.1 Overview ... 362

14.2 Selection tables ... 363

14.3 Dimensional drawings ... 375

14.3.1 PHQ5 – PHQ10 F shaft design (flange shaft) ... 376

14.3.2 PHQ11 – PHQ12 F shaft design (flange shaft) ... 378

14.4 Type designation ... 380

14.4.1 Type designation PHQ5K_ – PHQ8K_ ... 380

14.4.2 Type designation PHQ9K_ – PHQ12K_ ... 381

14.4.3 Nameplate ... 381

14.5 Product description ... 382

14.5.1 Input options ... 382

14.5.2 Installation conditions ... 382

14.5.3 Mounting positions ... 382

14.5.4 Lubricants ... 383

14.5.5 Position of the plug connectors ... 383

14.5.6 Other product features ... 384

14.5.7 Direction of rotation ... 384

14.6 Project configuration ... 384

14.6.1 Calculation of the operating point ... 384

14.6.2 Permitted shaft loads for the output shaft ... 387

14.6.3 Recommendation for radial shaft seal rings ... 388

14.6.4 Reverse operation ... 389

14.7 Additional documentation ... 389

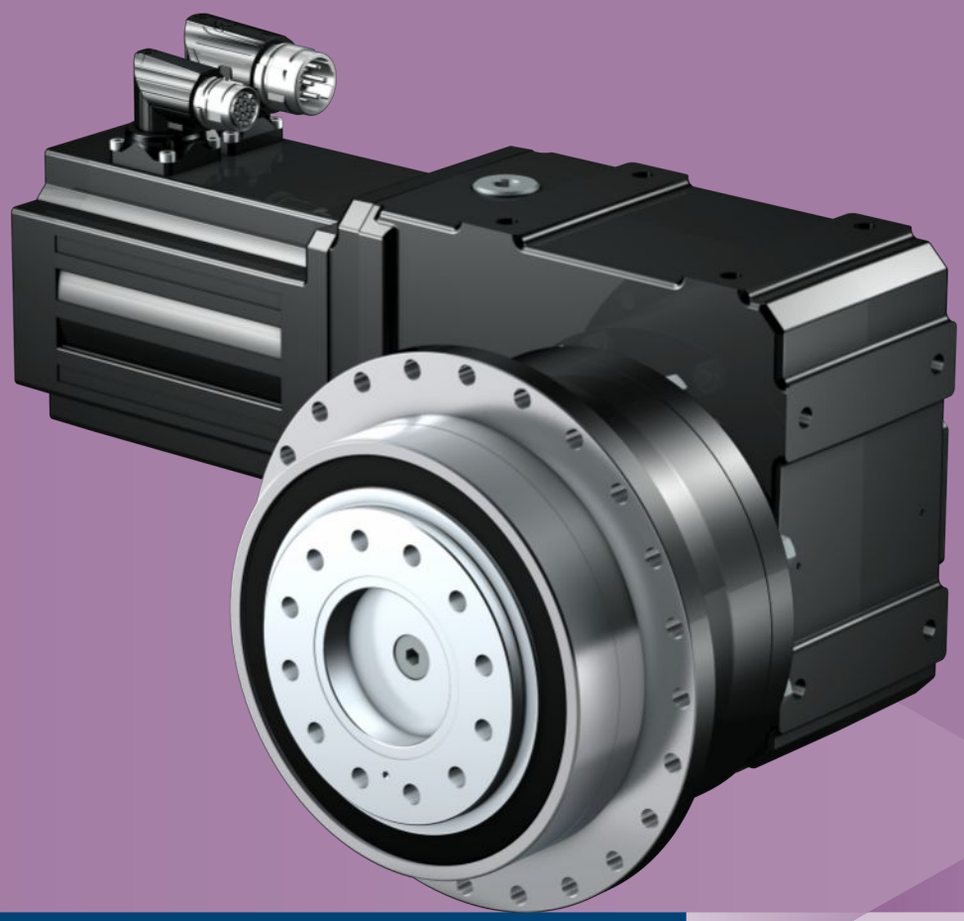

14 Right-angle planetary geared motors PHQK

14.1 Overview

Quattro-Power precision right-angle planetary geared motors

Features

Power density	★★★★★
Backlash	★★★★★
Price category	€€€€€
Shaft load	★★★★★
Smooth operation	★★★☆☆
Torsional stiffness	★★★★★
Mass moment of inertia	★★★★★
Helical gearing	✓
Maintenance-free	✓
High power density	✓
Continuous operation without cooling	✓
Stiff output bearings due to pretension	✓
Reinforced output bearing (PHQ4 – PHQ5)	✓ (optional)
Compact and highly dynamic due to direct motor attachment	✓

Key ★☆☆☆☆ good | ★★★★★ excellent
€ Economy | €€€€€ Premium

Technical data

i	22 – 2242
M_{2acc}	123 – 43000 Nm
$\Delta\phi_2$	1.5 – 4 arcmin
η_{get}	90 – 93 %

14.2 Selection tables

The technical data specified in the selection tables applies to:

- Installation altitudes up to 1000 m above sea level
- Surrounding temperatures from 0 °C to 40 °C
- Drives with convection-cooled motors (e.g. EZ401**U**)

For the technical data on drives with forced ventilated motors (e.g. EZ401**B**), refer to http://configurator.stoeber.de.

An explanation of the formula symbols can be found in Chapter [▶ 23.1].

n_{2N} [rpm]	M_{2N} [Nm]	$M_{2,0}$ [Nm]	a_{th}	S	Type	M_{2acc} [Nm]	M_{2accHT} [Nm]	M_{2NOT} [Nm]	i	i_{exakt}	n_{1maxDB} EL1,2 [rpm]	n_{1maxDB} EL3,4,5,6 [rpm]	n_{1maxZB} [rpm]	J_1 [kgcm²]	$\Delta\varphi_2$ [arc min]	$\Delta\varphi_{2red}$ [arc min]	C_2 [Nm/ arcmin]	m [kg]
PHQ531K (n_{1N} = 3000 rpm, $M_{2acc,max}$ = 550 Nm)																		
9.7	267	273	10	1.0	PHQ531_0055K102_0560 EZ301U	540	540	950	308.5	6479/21	4000	4000	7000	0.21	4.0	2.0	70	17
12	223	228	10	1.3	PHQ531_0055K102_0470 EZ301U	550	550	950	258.0	25289/98	4000	4000	7000	0.22	4.0	2.0	70	17
14	192	196	9.6	1.5	PHQ531_0055K102_0400 EZ301U	390	390	700	221.7	4433/20	4000	4000	7000	0.21	4.0	2.0	70	17
16	167	171	9.3	1.7	PHQ531_0055K102_0350 EZ301U	500	500	950	193.1	20273/105	4000	4000	7000	0.23	4.0	2.0	70	17
16	161	164	9.2	1.7	PHQ531_0055K102_0340 EZ301U	460	460	840	185.4	51909/280	4000	4000	7000	0.22	4.0	2.0	70	17
16	274	290	16	1.0	PHQ531_0055K102_0340 EZ302U	460	460	840	185.4	51909/280	4000	4000	7000	0.32	4.0	2.0	70	18
19	134	136	8.8	2.1	PHQ531_0055K102_0280 EZ301U	400	400	950	154.3	6479/42	4000	4000	7000	0.26	4.0	2.0	70	17
19	228	241	15	1.2	PHQ531_0055K102_0280 EZ302U	550	550	950	154.3	6479/42	4000	4000	7000	0.36	4.0	2.0	70	18
22	120	123	8.6	2.3	PHQ531_0055K102_0250 EZ301U	360	360	810	138.7	13871/100	4000	4000	7000	0.24	4.0	2.0	70	17
22	205	217	15	1.4	PHQ531_0055K102_0250 EZ302U	550	550	810	138.7	13871/100	4000	4000	7000	0.34	4.0	2.0	70	18
22	267	283	19	1.0	PHQ531_0055K102_0250 EZ303U	550	550	810	138.7	13871/100	4000	4000	7000	0.45	4.0	2.0	70	18
23	111	113	8.4	2.5	PHQ531_0055K102_0230 EZ301U	330	330	910	128.0	6270/49	4000	4000	7000	0.28	4.0	2.0	70	17
23	189	200	14	1.5	PHQ531_0055K102_0230 EZ302U	550	550	910	128.0	6270/49	4000	4000	7000	0.38	4.0	2.0	70	18
23	247	261	19	1.1	PHQ531_0055K102_0230 EZ303U	550	550	910	128.0	6270/49	4000	4000	7000	0.49	4.0	2.0	70	18
27	96	98	8.1	2.9	PHQ531_0055K102_0200 EZ301U	290	290	690	110.8	4433/40	4000	4000	7000	0.26	4.0	2.0	70	17
27	164	173	14	1.7	PHQ531_0055K102_0200 EZ302U	510	510	690	110.8	4433/40	4000	4000	7000	0.36	4.0	2.0	70	18
27	214	226	18	1.3	PHQ531_0055K102_0200 EZ303U	510	510	690	110.8	4433/40	4000	4000	7000	0.47	4.0	2.0	70	18
31	84	85	7.8	3.3	PHQ531_0055K102_0175 EZ301U	250	250	730	96.60	11495/119	4000	3800	6000	0.32	4.0	2.0	70	17
31	143	151	13	2.0	PHQ531_0055K102_0175 EZ302U	450	450	730	96.60	11495/119	4000	3800	6000	0.42	4.0	2.0	70	18
31	186	197	17	1.5	PHQ531_0055K102_0175 EZ303U	540	540	730	96.60	11495/119	4000	3800	6000	0.53	4.0	2.0	70	18
31	252	270	24	1.1	PHQ531_0055K102_0175 EZ401U	550	550	950	96.60	11495/119	4000	3800	6000	1.1	4.0	2.0	70	20
33	80	81	7.7	3.5	PHQ531_0055K102_0165 EZ301U	240	240	650	91.93	1287/14	4000	4000	7000	0.29	4.0	2.0	70	17
33	136	144	13	2.1	PHQ531_0055K102_0165 EZ302U	430	430	650	91.93	1287/14	4000	4000	7000	0.39	4.0	2.0	70	18
33	177	187	17	1.6	PHQ531_0055K102_0165 EZ303U	480	480	650	91.93	1287/14	4000	4000	7000	0.50	4.0	2.0	70	18
33	240	257	23	1.2	PHQ531_0055K102_0165 EZ401U	550	550	950	91.93	1287/14	4000	4000	7000	1.0	4.0	2.0	70	20
39	67	69	7.4	4.2	PHQ531_0055K102_0140 EZ301U	200	200	590	77.63	2717/35	4000	3800	6000	0.37	4.0	2.0	70	17
39	115	121	13	2.4	PHQ531_0055K102_0140 EZ302U	360	360	590	77.63	2717/35	4000	3800	6000	0.47	4.0	2.0	70	18
39	150	158	17	1.9	PHQ531_0055K102_0140 EZ303U	430	430	590	77.63	2717/35	4000	3800	6000	0.58	4.0	2.0	70	18
39	202	217	22	1.4	PHQ531_0055K102_0140 EZ401U	550	550	950	77.63	2717/35	4000	3800	6000	1.1	4.0	2.0	70	20
43	60	61	7.2	4.7	PHQ531_0055K102_0125 EZ301U	180	180	530	69.40	4719/68	4000	3800	6000	0.35	4.0	2.0	70	17
43	103	109	12	2.7	PHQ531_0055K102_0125 EZ302U	320	320	530	69.40	4719/68	4000	3800	6000	0.45	4.0	2.0	70	18
43	134	142	16	2.1	PHQ531_0055K102_0125 EZ303U	390	390	530	69.40	4719/68	4000	3800	6000	0.56	4.0	2.0	70	18
43	181	194	22	1.5	PHQ531_0055K102_0125 EZ401U	550	550	950	69.40	4719/68	4000	3800	6000	1.1	4.0	2.0	70	20
43	278	304	33	1.0	PHQ531_0055K102_0125 EZ501U	550	550	950	69.40	4719/68	4000	3800	6000	3.1	4.0	2.0	70	21
47	94	100	12	3.0	PHQ531_0055K102_0115 EZ302U	300	300	480	63.61	1463/23	3600	3300	5500	0.53	4.0	2.0	70	18
47	123	130	16	2.3	PHQ531_0055K102_0115 EZ303U	360	360	480	63.61	1463/23	3600	3300	5500	0.64	4.0	2.0	70	18
47	166	178	21	1.7	PHQ531_0055K102_0115 EZ401U	500	500	950	63.61	1463/23	3600	3300	5500	1.2	4.0	2.0	70	20
47	255	278	33	1.1	PHQ531_0055K102_0115 EZ501U	550	550	950	63.61	1463/23	3600	3300	5500	3.1	4.0	2.0	70	21
47	278	308	36	1.0	PHQ531_0055K102_0115 EZ402U	550	550	950	63.61	1463/23	3600	3300	5500	1.9	4.0	2.0	70	21
54	83	87	12	3.4	PHQ531_0055K102_0100 EZ302U	260	260	420	55.77	5577/100	4000	3800	6000	0.51	4.0	2.0	70	18
54	108	114	15	2.6	PHQ531_0055K102_0100 EZ303U	310	310	420	55.77	5577/100	4000	3800	6000	0.62	4.0	2.0	70	18
54	145	156	21	1.9	PHQ531_0055K102_0100 EZ401U	440	440	950	55.77	5577/100	4000	3800	6000	1.2	4.0	2.0	70	20
54	223	244	32	1.3	PHQ531_0055K102_0100 EZ501U	550	550	950	55.77	5577/100	4000	3800	6000	3.1	4.0	2.0	70	21
54	244	270	35	1.1	PHQ531_0055K102_0100 EZ402U	550	550	950	55.77	5577/100	4000	3800	6000	1.9	4.0	2.0	70	21
59	75	80	11	3.7	PHQ531_0055K102_0092 EZ302U	240	240	390	50.87	9614/189	3600	3300	5500	0.63	4.0	2.0	70	18
59	98	104	15	2.9	PHQ531_0055K102_0092 EZ303U	280	280	390	50.87	9614/189	3600	3300	5500	0.74	4.0	2.0	70	18
59	133	142	20	2.1	PHQ531_0055K102_0092 EZ401U	400	400	950	50.87	9614/189	3600	3300	5500	1.3	4.0	2.0	70	20
59	204	223	31	1.4	PHQ531_0055K102_0092 EZ501U	550	550	950	50.87	9614/189	3600	3300	5500	3.2	4.0	2.0	70	21
59	223	246	34	1.3	PHQ531_0055K102_0092 EZ402U	550	550	950	50.87	9614/189	3600	3300	5500	2.0	4.0	2.0	70	21
66	68	71	12	3.8	PHQ531_0055K102_0083 EZ302U	210	210	350	45.70	21021/460	3600	3300	5500	0.59	4.0	2.0	70	18
66	88	93	16	2.9	PHQ531_0055K102_0083 EZ303U	260	260	350	45.70	21021/460	3600	3300	5500	0.70	4.0	2.0	70	18
66	119	128	20	2.4	PHQ531_0055K102_0083 EZ401U	360	360	950	45.70	21021/460	3600	3300	5500	1.2	4.0	2.0	70	20

n_{2N} [rpm]	M_{2N} [Nm]	$M_{2,0}$ [Nm]	a_{th}	S	Type	M_{2acc} [Nm]	M_{2accHT} [Nm]	M_{2NOT} [Nm]	i	i_{exakt}	n_{1maxDB} EL1,2 [rpm]	n_{1maxDB} EL3,4,5,6 [rpm]	n_{1maxZB} [rpm]	J_1 [kgcm²]	$\Delta\varphi_2$ [arc min]	$\Delta\varphi_{2red}$ [arc min]	C_2 [Nm/ arcmin]	m [kg]
PHQ531K (n_{1N} = 3000 rpm, $M_{2acc,max}$ = 550 Nm)																		
66	183	200	30	1.5	PHQ531_0055K102_0083 EZ501U	550	550	950	45.70	21021/460	3600	3300	5500	3.2	4.0	2.0	70	21
66	200	221	33	1.4	PHQ531_0055K102_0083 EZ402U	550	550	950	45.70	21021/460	3600	3300	5500	1.9	4.0	2.0	70	21
82	54	57	14	3.8	PHQ531_0055K102_0066 EZ302U	170	170	280	36.54	3289/90	3600	3300	5500	0.71	4.0	2.0	70	18
82	70	75	19	2.9	PHQ531_0055K102_0066 EZ303U	200	200	280	36.54	3289/90	3600	3300	5500	0.82	4.0	2.0	70	18
82	95	102	18	2.9	PHQ531_0055K102_0066 EZ401U	290	290	950	36.54	3289/90	3600	3300	5500	1.4	4.0	2.0	70	20
82	146	160	28	1.9	PHQ531_0055K102_0066 EZ501U	540	540	950	36.54	3289/90	3600	3300	5500	3.3	4.0	2.0	70	21
82	160	177	31	1.8	PHQ531_0055K102_0066 EZ402U	540	540	950	36.54	3289/90	3600	3300	5500	2.1	4.0	2.0	70	21
82	235	293	46	1.2	PHQ531_0055K102_0066 EZ404U	550	550	950	36.54	3289/90	3600	3300	5500	3.4	4.0	2.0	70	23
82	252	272	49	1.1	PHQ531_0055K102_0066 EZ502U	550	550	950	36.54	3289/90	3600	3300	5500	5.6	4.0	2.0	70	22
82	252	282	49	1.1	PHQ531_0055K102_0066 EZ701U	550	550	950	36.54	3289/90	3600	3300	5500	8.9	4.0	2.0	70	24
91	86	92	18	3.3	PHQ531_0055K102_0060 EZ401U	260	260	950	33.00	33/1	3300	2800	5000	1.4	4.0	2.0	70	20
91	132	144	28	2.1	PHQ531_0055K102_0060 EZ501U	490	490	950	33.00	33/1	3300	2800	5000	3.4	4.0	2.0	70	21
91	144	160	30	1.9	PHQ531_0055K102_0060 EZ402U	490	490	950	33.00	33/1	3300	2800	5000	2.1	4.0	2.0	70	21
91	212	264	44	1.3	PHQ531_0055K102_0060 EZ404U	550	550	950	33.00	33/1	3300	2800	5000	3.5	4.0	2.0	70	23
91	227	246	48	1.2	PHQ531_0055K102_0060 EZ502U	550	550	950	33.00	33/1	3300	2800	5000	5.7	4.0	2.0	70	22
91	227	255	48	1.2	PHQ531_0055K102_0060 EZ701U	550	550	950	33.00	33/1	3300	2800	5000	9.0	4.0	2.0	70	24
98	45	48	16	3.8	PHQ531_0055K102_0056 EZ302U	140	140	230	30.62	8360/273	3300	2800	5000	0.97	4.0	2.0	70	18
98	59	62	21	2.9	PHQ531_0055K102_0056 EZ303U	170	170	230	30.62	8360/273	3300	2800	5000	1.1	4.0	2.0	70	18
98	80	86	18	3.5	PHQ531_0055K102_0056 EZ401U	240	240	930	30.62	8360/273	3300	2800	5000	1.6	4.0	2.0	70	20
98	123	134	27	2.3	PHQ531_0055K102_0056 EZ501U	460	460	930	30.62	8360/273	3300	2800	5000	3.6	4.0	2.0	70	21
98	134	148	30	2.1	PHQ531_0055K102_0056 EZ402U	460	460	930	30.62	8360/273	3300	2800	5000	2.3	4.0	2.0	70	21
98	197	245	44	1.4	PHQ531_0055K102_0056 EZ404U	550	550	930	30.62	8360/273	3300	2800	5000	3.7	4.0	2.0	70	23
98	211	228	47	1.3	PHQ531_0055K102_0056 EZ502U	550	550	930	30.62	8360/273	3300	2800	5000	5.9	4.0	2.0	70	22
98	211	237	47	1.3	PHQ531_0055K102_0056 EZ701U	550	550	930	30.62	8360/273	3300	2800	5000	9.2	4.0	2.0	70	24
98	277	317	61	1.0	PHQ531_0055K102_0056 EZ503U	550	550	930	30.62	8360/273	3300	2800	5000	8.3	4.0	2.0	70	24
136	42	45	27	2.9	PHQ531_0055K102_0040 EZ303U	120	120	170	22.00	22/1	3300	2800	5000	1.3	4.0	2.0	70	18
136	57	61	17	4.8	PHQ531_0055K102_0040 EZ401U	170	170	670	22.00	22/1	3300	2800	5000	1.8	4.0	2.0	70	20
136	88	96	26	3.1	PHQ531_0055K102_0040 EZ501U	330	330	670	22.00	22/1	3300	2800	5000	3.8	4.0	2.0	70	21
136	96	107	28	2.8	PHQ531_0055K102_0040 EZ402U	330	330	670	22.00	22/1	3300	2800	5000	2.5	4.0	2.0	70	21
136	141	176	41	1.9	PHQ531_0055K102_0040 EZ404U	490	490	670	22.00	22/1	3300	2800	5000	3.9	4.0	2.0	70	23
136	152	164	44	1.8	PHQ531_0055K102_0040 EZ502U	490	490	670	22.00	22/1	3300	2800	5000	6.1	4.0	2.0	70	22
136	152	170	44	1.8	PHQ531_0055K102_0040 EZ701U	410	410	670	22.00	22/1	3300	2800	5000	9.4	4.0	2.0	70	24
136	199	227	58	1.4	PHQ531_0055K102_0040 EZ503U	490	490	670	22.00	22/1	3300	2800	5000	8.5	4.0	2.0	70	24
PHQ531K (n_{1N} = 6000 rpm, $M_{2acc,max}$ = 550 Nm)																		
19	256	273	10	1.1	PHQ531_0055K102_0560 EZ301U	540	540	950	308.5	6479/21	4000	4000	7000	0.21	4.0	2.0	70	17
23	214	228	9.6	1.3	PHQ531_0055K102_0470 EZ301U	550	550	950	258.0	25289/98	4000	4000	7000	0.22	4.0	2.0	70	17
27	184	196	9.2	1.5	PHQ531_0055K102_0400 EZ301U	390	390	700	221.7	4433/20	4000	4000	7000	0.21	4.0	2.0	70	17
31	160	171	8.9	1.8	PHQ531_0055K102_0350 EZ301U	500	500	950	193.1	20273/105	4000	4000	7000	0.23	4.0	2.0	70	17
31	270	302	15	1.0	PHQ531_0055K102_0350 EZ302U	550	550	950	193.1	20273/105	4000	4000	7000	0.33	4.0	2.0	70	18
32	154	164	8.8	1.8	PHQ531_0055K102_0340 EZ301U	460	460	840	185.4	51909/280	4000	4000	7000	0.22	4.0	2.0	70	17
32	259	290	15	1.1	PHQ531_0055K102_0340 EZ302U	460	460	840	185.4	51909/280	4000	4000	7000	0.32	4.0	2.0	70	18
39	128	136	8.4	2.2	PHQ531_0055K102_0280 EZ301U	400	400	950	154.3	6479/42	4000	4000	7000	0.26	4.0	2.0	70	17
39	215	241	14	1.3	PHQ531_0055K102_0280 EZ302U	550	550	950	154.3	6479/42	4000	4000	7000	0.36	4.0	2.0	70	18
43	115	123	8.2	2.4	PHQ531_0055K102_0250 EZ301U	360	360	810	138.7	13871/100	4000	4000	7000	0.24	4.0	2.0	70	17
43	194	217	14	1.4	PHQ531_0055K102_0250 EZ302U	550	550	810	138.7	13871/100	4000	4000	7000	0.34	4.0	2.0	70	18
43	253	291	18	1.1	PHQ531_0055K102_0250 EZ303U	550	550	810	138.7	13871/100	4000	4000	7000	0.45	4.0	2.0	70	18
47	106	113	8.0	2.6	PHQ531_0055K102_0230 EZ301U	330	330	910	128.0	6270/49	4000	4000	7000	0.28	4.0	2.0	70	17
47	179	200	14	1.6	PHQ531_0055K102_0230 EZ302U	550	550	910	128.0	6270/49	4000	4000	7000	0.38	4.0	2.0	70	18
47	234	268	18	1.2	PHQ531_0055K102_0230 EZ303U	550	550	910	128.0	6270/49	4000	4000	7000	0.49	4.0	2.0	70	18
47	274	334	21	1.0	PHQ531_0055K102_0230 EZ401U	550	550	950	128.0	6270/49	4000	4000	7000	1.0	4.0	2.0	70	20
54	92	98	7.8	3.0	PHQ531_0055K102_0200 EZ301U	290	290	690	110.8	4433/40	4000	4000	7000	0.26	4.0	2.0	70	17
54	155	173	13	1.8	PHQ531_0055K102_0200 EZ302U	510	510	690	110.8	4433/40	4000	4000	7000	0.36	4.0	2.0	70	18
54	202	232	17	1.4	PHQ531_0055K102_0200 EZ303U	510	510	690	110.8	4433/40	4000	4000	7000	0.47	4.0	2.0	70	18
54	237	289	20	1.2	PHQ531_0055K102_0200 EZ401U	550	550	950	110.8	4433/40	4000	4000	7000	1.0	4.0	2.0	70	20
62	80	85	7.5	3.5	PHQ531_0055K102_0175 EZ301U	250	250	730	96.60	11495/119	4000	3800	6000	0.32	4.0	2.0	70	17
62	135	151	13	2.1	PHQ531_0055K102_0175 EZ302U	450	450	730	96.60	11495/119	4000	3800	6000	0.42	4.0	2.0	70	18
62	176	202	17	1.6	PHQ531_0055K102_0175 EZ303U	540	540	730	96.60	11495/119	4000	3800	6000	0.53	4.0	2.0	70	18
62	207	252	19	1.4	PHQ531_0055K102_0175 EZ401U	550	550	950	96.60	11495/119	4000	3800	6000	1.1	4.0	2.0	70	20
65	76	81	7.4	3.7	PHQ531_0055K102_0165 EZ301U	240	240	650	91.93	1287/14	4000	4000	7000	0.29	4.0	2.0	70	17
65	128	144	12	2.2	PHQ531_0055K102_0165 EZ302U	430	430	650	91.93	1287/14	4000	4000	7000	0.39	4.0	2.0	70	18
65	168	193	16	1.7	PHQ531_0055K102_0165 EZ303U	480	480	650	91.93	1287/14	4000	4000	7000	0.50	4.0	2.0	70	18
65	197	240	19	1.4	PHQ531_0055K102_0165 EZ401U	550	550	950	91.93	1287/14	4000	4000	7000	1.0	4.0	2.0	70	20
77	64	69	7.1	4.4	PHQ531_0055K102_0140 EZ301U	200	200	590	77.63	2717/35	4000	3800	6000	0.37	4.0	2.0	70	17
77	108	121	12	2.6	PHQ531_0055K102_0140 EZ302U	360	360	590	77.63	2717/35	4000	3800	6000	0.47	4.0	2.0	70	18

n_{2N} [rpm]	M_{2N} [Nm]	$M_{2,0}$ [Nm]	a_{th}	S	Type	M_{2acc} [Nm]	M_{2accHT} [Nm]	M_{2NOT} [Nm]	i	i_{exakt}	n_{1maxDB} EL1,2 [rpm]	n_{1maxDB} EL3,4,5,6 [rpm]	n_{1maxZB} [rpm]	J_1 [kgcm²]	$\Delta\varphi_2$ [arc min]	$\Delta\varphi_{2red}$ [arc min]	C_2 [Nm/ arcmin]	m [kg]
PHQ531K (n_{1N} = 6000 rpm, $M_{2acc,max}$ = 550 Nm)																		
77	142	163	16	2.0	PHQ531_0055K102_0140 EZ303U	430	430	590	77.63	2717/35	4000	3800	6000	0.58	4.0	2.0	70	18
77	166	202	18	1.7	PHQ531_0055K102_0140 EZ401U	550	550	950	77.63	2717/35	4000	3800	6000	1.1	4.0	2.0	70	20
77	246	318	27	1.1	PHQ531_0055K102_0140 EZ501U	550	550	950	77.63	2717/35	4000	3800	6000	3.1	4.0	2.0	70	21
77	253	354	28	1.1	PHQ531_0055K102_0140 EZ402U	550	550	950	77.63	2717/35	4000	3800	6000	1.8	4.0	2.0	70	21
86	97	109	12	2.9	PHQ531_0055K102_0125 EZ302U	320	320	530	69.40	4719/68	4000	3800	6000	0.45	4.0	2.0	70	18
86	127	145	15	2.2	PHQ531_0055K102_0125 EZ303U	390	390	530	69.40	4719/68	4000	3800	6000	0.56	4.0	2.0	70	18
86	149	181	18	1.9	PHQ531_0055K102_0125 EZ401U	550	550	950	69.40	4719/68	4000	3800	6000	1.1	4.0	2.0	70	20
86	220	284	26	1.3	PHQ531_0055K102_0125 EZ501U	550	550	950	69.40	4719/68	4000	3800	6000	3.1	4.0	2.0	70	21
86	226	317	27	1.2	PHQ531_0055K102_0125 EZ402U	550	550	950	69.40	4719/68	4000	3800	6000	1.8	4.0	2.0	70	21
108	78	87	11	3.6	PHQ531_0055K102_0100 EZ302U	260	260	420	55.77	5577/100	4000	3800	6000	0.51	4.0	2.0	70	18
108	102	117	14	2.8	PHQ531_0055K102_0100 EZ303U	310	310	420	55.77	5577/100	4000	3800	6000	0.62	4.0	2.0	70	18
108	119	145	17	2.3	PHQ531_0055K102_0100 EZ401U	440	440	950	55.77	5577/100	4000	3800	6000	1.2	4.0	2.0	70	20
108	177	229	25	1.6	PHQ531_0055K102_0100 EZ501U	550	550	950	55.77	5577/100	4000	3800	6000	3.1	4.0	2.0	70	21
108	182	254	26	1.5	PHQ531_0055K102_0100 EZ402U	550	550	950	55.77	5577/100	4000	3800	6000	1.9	4.0	2.0	70	21
108	270	405	38	1.0	PHQ531_0055K102_0100 EZ502U	550	550	950	55.77	5577/100	4000	3800	6000	5.4	4.0	2.0	70	22
108	270	410	38	1.0	PHQ531_0055K102_0100 EZ701U	550	550	950	55.77	5577/100	4000	3800	6000	8.7	4.0	2.0	70	24
PHQ731K (n_{1N} = 3000 rpm, $M_{2acc,max}$ = 1050 Nm)																		
9.8	452	478	11	1.1	PHQ731_0055K202_0560 EZ302U	1010	1010	1560	305.5	14663/48	4000	3900	6500	0.34	4.0	2.0	136	30
11	411	434	11	1.2	PHQ731_0055K202_0500 EZ302U	610	610	1060	277.7	6665/24	4000	3900	6500	0.33	4.0	2.0	136	30
12	376	398	11	1.3	PHQ731_0055K202_0460 EZ302U	1050	1050	1480	254.2	20339/80	4000	3900	6500	0.36	4.0	2.0	136	30
12	490	518	14	1.0	PHQ731_0055K202_0460 EZ303U	1050	1050	1480	254.2	20339/80	4000	3900	6500	0.47	4.0	2.0	136	31
14	329	348	10	1.5	PHQ731_0055K202_0400 EZ302U	730	730	1130	222.2	1333/6	4000	3900	6500	0.35	4.0	2.0	136	30
14	428	453	13	1.2	PHQ731_0055K202_0400 EZ303U	730	730	1130	222.2	1333/6	4000	3900	6500	0.46	4.0	2.0	136	31
16	281	297	9.9	1.8	PHQ731_0055K202_0350 EZ302U	880	880	1230	190.0	21285/112	4000	3900	6500	0.41	4.0	2.0	136	30
16	366	388	13	1.4	PHQ731_0055K202_0350 EZ303U	910	910	1230	190.0	21285/112	4000	3900	6500	0.52	4.0	2.0	136	31
16	496	531	17	1.0	PHQ731_0055K202_0350 EZ401U	1050	1050	2100	190.0	21285/112	4000	3900	6500	1.1	4.0	2.0	136	32
16	274	289	9.8	1.8	PHQ731_0055K202_0340 EZ302U	790	790	1070	184.9	1849/10	4000	3900	6500	0.37	4.0	2.0	136	30
16	356	377	13	1.4	PHQ731_0055K202_0340 EZ303U	790	790	1070	184.9	1849/10	4000	3900	6500	0.48	4.0	2.0	136	31
16	482	517	17	1.0	PHQ731_0055K202_0340 EZ401U	980	980	1760	184.9	1849/10	4000	3900	6500	1.0	4.0	2.0	136	32
20	401	429	16	1.2	PHQ731_0055K202_0280 EZ401U	1050	1050	2100	153.7	6149/40	4000	3900	6500	1.1	4.0	2.0	136	32
22	205	216	9.1	2.4	PHQ731_0055K202_0250 EZ302U	640	640	890	138.2	1935/14	4000	3900	6500	0.43	4.0	2.0	136	30
22	266	282	12	1.9	PHQ731_0055K202_0250 EZ303U	660	660	890	138.2	1935/14	4000	3900	6500	0.54	4.0	2.0	136	31
22	360	386	16	1.4	PHQ731_0055K202_0250 EZ401U	1050	1050	2100	138.2	1935/14	4000	3900	6500	1.1	4.0	2.0	136	32
24	189	199	8.9	2.6	PHQ731_0055K202_0230 EZ302U	590	590	970	127.5	32637/256	4000	3900	6500	0.53	4.0	2.0	136	30
24	246	260	12	2.0	PHQ731_0055K202_0230 EZ303U	710	710	970	127.5	32637/256	4000	3900	6500	0.64	4.0	2.0	136	31
24	332	356	16	1.5	PHQ731_0055K202_0230 EZ401U	1010	1010	2100	127.5	32637/256	4000	3900	6500	1.2	4.0	2.0	136	32
27	291	312	15	1.7	PHQ731_0055K202_0200 EZ401U	880	880	2100	111.8	559/5	4000	3900	6500	1.1	4.0	2.0	136	32
27	448	489	23	1.1	PHQ731_0055K202_0200 EZ501U	1050	1050	2100	111.8	559/5	4000	3900	6500	3.1	4.0	2.0	136	33
27	489	541	26	1.0	PHQ731_0055K202_0200 EZ402U	1050	1050	2100	111.8	559/5	4000	3900	6500	1.8	4.0	2.0	136	33
31	142	150	8.3	3.5	PHQ731_0055K202_0175 EZ302U	450	450	730	96.08	6149/64	3900	3500	5500	0.66	4.0	2.0	136	30
31	185	196	11	2.7	PHQ731_0055K202_0175 EZ303U	540	540	730	96.08	6149/64	3900	3500	5500	0.77	4.0	2.0	136	31
31	251	268	15	2.0	PHQ731_0055K202_0175 EZ401U	760	760	2100	96.08	6149/64	3900	3500	5500	1.3	4.0	2.0	136	32
31	385	421	23	1.3	PHQ731_0055K202_0175 EZ501U	1050	1050	2100	96.08	6149/64	3900	3500	5500	3.3	4.0	2.0	136	33
31	421	465	25	1.2	PHQ731_0055K202_0175 EZ402U	1050	1050	2100	96.08	6149/64	3900	3500	5500	2.0	4.0	2.0	136	33
32	137	145	8.3	3.6	PHQ731_0055K202_0170 EZ302U	430	430	700	92.72	2967/32	4000	3900	6500	0.56	4.0	2.0	136	30
32	179	189	11	2.8	PHQ731_0055K202_0170 EZ303U	520	520	700	92.72	2967/32	4000	3900	6500	0.67	4.0	2.0	136	31
32	242	259	15	2.1	PHQ731_0055K202_0170 EZ401U	730	730	2100	92.72	2967/32	4000	3900	6500	1.2	4.0	2.0	136	32
32	371	406	22	1.3	PHQ731_0055K202_0170 EZ501U	1050	1050	2100	92.72	2967/32	4000	3900	6500	3.2	4.0	2.0	136	33
32	406	449	24	1.2	PHQ731_0055K202_0170 EZ402U	1050	1050	2100	92.72	2967/32	4000	3900	6500	1.9	4.0	2.0	136	33
39	199	213	14	2.5	PHQ731_0055K202_0140 EZ401U	600	600	2100	76.18	31691/416	3900	3500	5500	1.4	4.0	2.0	136	32
39	305	333	21	1.6	PHQ731_0055K202_0140 EZ501U	1050	1050	2100	76.18	31691/416	3900	3500	5500	3.4	4.0	2.0	136	33
39	333	369	23	1.5	PHQ731_0055K202_0140 EZ402U	1050	1050	2100	76.18	31691/416	3900	3500	5500	2.1	4.0	2.0	136	33
39	489	610	34	1.0	PHQ731_0055K202_0140 EZ404U	1050	1050	2100	76.18	31691/416	3900	3500	5500	3.5	4.0	2.0	136	35
43	103	109	9.8	3.8	PHQ731_0055K202_0125 EZ302U	330	330	530	69.88	559/8	3900	3500	5500	0.71	4.0	2.0	136	30
43	135	143	13	2.9	PHQ731_0055K202_0125 EZ303U	390	390	530	69.88	559/8	3900	3500	5500	0.82	4.0	2.0	136	31
43	182	195	14	2.7	PHQ731_0055K202_0125 EZ401U	550	550	2100	69.88	559/8	3900	3500	5500	1.4	4.0	2.0	136	32
43	280	306	21	1.8	PHQ731_0055K202_0125 EZ501U	1040	1040	2100	69.88	559/8	3900	3500	5500	3.3	4.0	2.0	136	33
43	306	338	23	1.6	PHQ731_0055K202_0125 EZ402U	1040	1040	2100	69.88	559/8	3900	3500	5500	2.1	4.0	2.0	136	33
43	449	560	33	1.1	PHQ731_0055K202_0125 EZ404U	1050	1050	2100	69.88	559/8	3900	3500	5500	3.4	4.0	2.0	136	35
43	482	521	36	1.0	PHQ731_0055K202_0125 EZ502U	1050	1050	2100	69.88	559/8	3900	3500	5500	5.6	4.0	2.0	136	35
43	482	540	36	1.0	PHQ731_0055K202_0125 EZ701U	1050	1050	2100	69.88	559/8	3900	3500	5500	8.9	4.0	2.0	136	37
47	94	99	11	3.8	PHQ731_0055K202_0115 EZ302U	300	300	480	63.50	13717/216	3500	3100	5000	0.97	4.0	2.0	136	30
47	122	130	14	2.9	PHQ731_0055K202_0115 EZ303U	350	350	480	63.50	13717/216	3500	3100	5000	1.1	4.0	2.0	136	31
47	166	177	13	3.0	PHQ731_0055K202_0115 EZ401U	500	500	1930	63.50	13717/216	3500	3100	5000	1.6	4.0	2.0	136	32

n_{2N} [rpm]	M_{2N} [Nm]	$M_{2,0}$ [Nm]	a_{th}	S	Type	M_{2acc} [Nm]	M_{2accHT} [Nm]	M_{2NOT} [Nm]	i	i_{exakt}	n_{1maxDB} EL1,2 [rpm]	n_{1maxDB} EL3,4,5,6 [rpm]	n_{1maxZB} [rpm]	J_1 [kgcm²]	$\Delta\varphi_2$ [arc min]	$\Delta\varphi_{2red}$ [arc min]	C_2 [Nm/ arcmin]	m [kg]
PHQ731K (n_{1N} = 3000 rpm, $M_{2acc,max}$ = 1050 Nm)																		
47	254	278	20	2.0	PHQ731_0055K202_0115 EZ501U	950	950	1930	63.50	13717/216	3500	3100	5000	3.6	4.0	2.0	136	33
47	278	307	22	1.8	PHQ731_0055K202_0115 EZ402U	950	950	1930	63.50	13717/216	3500	3100	5000	2.3	4.0	2.0	136	33
47	408	509	33	1.2	PHQ731_0055K202_0115 EZ404U	1050	1050	1930	63.50	13717/216	3500	3100	5000	3.7	4.0	2.0	136	35
47	438	473	35	1.1	PHQ731_0055K202_0115 EZ502U	1050	1050	1930	63.50	13717/216	3500	3100	5000	5.9	4.0	2.0	136	35
47	438	491	35	1.1	PHQ731_0055K202_0115 EZ701U	1050	1050	2100	63.50	13717/216	3500	3100	5000	9.2	4.0	2.0	136	37
54	144	155	13	3.5	PHQ731_0055K202_0100 EZ401U	440	440	1680	55.40	2881/52	3900	3500	5500	1.5	4.0	2.0	136	32
54	222	242	20	2.3	PHQ731_0055K202_0100 EZ501U	830	830	1680	55.40	2881/52	3900	3500	5500	3.5	4.0	2.0	136	33
54	242	268	21	2.1	PHQ731_0055K202_0100 EZ402U	830	830	1680	55.40	2881/52	3900	3500	5500	2.2	4.0	2.0	136	33
54	356	444	31	1.4	PHQ731_0055K202_0100 EZ404U	1050	1050	1680	55.40	2881/52	3900	3500	5500	3.6	4.0	2.0	136	35
54	382	413	34	1.3	PHQ731_0055K202_0100 EZ502U	1050	1050	1680	55.40	2881/52	3900	3500	5500	5.8	4.0	2.0	136	35
54	382	428	34	1.3	PHQ731_0055K202_0100 EZ701U	1030	1030	2100	55.40	2881/52	3900	3500	5500	9.1	4.0	2.0	136	37
59	132	141	12	3.8	PHQ731_0055K202_0092 EZ401U	400	400	1530	50.55	25069/496	3500	3100	5000	1.9	4.0	2.0	136	32
59	202	221	19	2.5	PHQ731_0055K202_0092 EZ501U	750	750	1530	50.55	25069/496	3500	3100	5000	3.8	4.0	2.0	136	33
59	221	245	21	2.3	PHQ731_0055K202_0092 EZ402U	750	750	1530	50.55	25069/496	3500	3100	5000	2.6	4.0	2.0	136	33
59	325	405	31	1.5	PHQ731_0055K202_0092 EZ404U	1050	1050	1530	50.55	25069/496	3500	3100	5000	3.9	4.0	2.0	136	35
59	348	377	33	1.4	PHQ731_0055K202_0092 EZ502U	1050	1050	1530	50.55	25069/496	3500	3100	5000	6.1	4.0	2.0	136	35
59	348	391	33	1.4	PHQ731_0055K202_0092 EZ701U	940	940	2100	50.55	25069/496	3500	3100	5000	9.4	4.0	2.0	136	37
59	457	522	43	1.1	PHQ731_0055K202_0092 EZ503U	1050	1050	1530	50.55	25069/496	3500	3100	5000	8.5	4.0	2.0	136	36
65	89	94	17	2.9	PHQ731_0055K202_0084 EZ303U	260	260	350	46.18	1247/27	3500	3100	5000	1.2	4.0	2.0	136	31
65	120	129	12	4.2	PHQ731_0055K202_0084 EZ401U	370	370	1400	46.18	1247/27	3500	3100	5000	1.7	4.0	2.0	136	32
65	185	202	19	2.7	PHQ731_0055K202_0084 EZ501U	690	690	1400	46.18	1247/27	3500	3100	5000	3.7	4.0	2.0	136	33
65	202	224	20	2.5	PHQ731_0055K202_0084 EZ402U	690	690	1400	46.18	1247/27	3500	3100	5000	2.4	4.0	2.0	136	33
65	297	370	30	1.7	PHQ731_0055K202_0084 EZ404U	1030	1030	1400	46.18	1247/27	3500	3100	5000	3.8	4.0	2.0	136	35
65	318	344	32	1.6	PHQ731_0055K202_0084 EZ502U	1030	1030	1400	46.18	1247/27	3500	3100	5000	6.0	4.0	2.0	136	35
65	318	357	32	1.6	PHQ731_0055K202_0084 EZ701U	860	860	2100	46.18	1247/27	3500	3100	5000	9.3	4.0	2.0	136	37
65	417	477	42	1.2	PHQ731_0055K202_0084 EZ503U	1030	1030	1400	46.18	1247/27	3500	3100	5000	8.4	4.0	2.0	136	36
77	270	303	31	1.9	PHQ731_0055K202_0071 EZ701U	730	730	2100	39.15	23177/592	3000	2600	4500	9.9	4.0	2.0	136	37
77	437	525	50	1.1	PHQ731_0055K202_0071 EZ702U	1050	1050	2100	39.15	23177/592	3000	2600	4500	15	4.0	2.0	136	39
77	492	583	56	1.0	PHQ731_0055K202_0071 EZ505U	1050	1050	2100	39.15	23177/592	3000	2600	4500	14	4.0	2.0	136	39
82	147	161	18	3.4	PHQ731_0055K202_0067 EZ501U	550	550	1110	36.76	2279/62	3500	3100	5000	4.0	4.0	2.0	136	33
82	161	178	19	3.1	PHQ731_0055K202_0067 EZ402U	550	550	1110	36.76	2279/62	3500	3100	5000	2.8	4.0	2.0	136	33
82	236	294	28	2.1	PHQ731_0055K202_0067 EZ404U	820	820	1110	36.76	2279/62	3500	3100	5000	4.1	4.0	2.0	136	35
82	253	274	30	2.0	PHQ731_0055K202_0067 EZ502U	820	820	1110	36.76	2279/62	3500	3100	5000	6.3	4.0	2.0	136	35
82	253	284	30	2.0	PHQ731_0055K202_0067 EZ701U	680	680	2100	36.76	2279/62	3500	3100	5000	9.6	4.0	2.0	136	37
82	332	380	40	1.5	PHQ731_0055K202_0067 EZ503U	820	820	1110	36.76	2279/62	3500	3100	5000	8.7	4.0	2.0	136	36
82	411	493	49	1.2	PHQ731_0055K202_0067 EZ702U	1050	1050	2100	36.76	2279/62	3500	3100	5000	15	4.0	2.0	136	39
82	462	548	56	1.1	PHQ731_0055K202_0067 EZ505U	1050	1050	2100	36.76	2279/62	3500	3100	5000	13	4.0	2.0	136	39
91	132	144	17	3.8	PHQ731_0055K202_0060 EZ501U	490	490	1000	33.00	33/1	3000	2600	4500	4.7	4.0	2.0	136	33
91	144	160	19	3.5	PHQ731_0055K202_0060 EZ402U	490	490	1000	33.00	33/1	3000	2600	4500	3.4	4.0	2.0	136	33
91	212	264	28	2.4	PHQ731_0055K202_0060 EZ404U	740	740	1000	33.00	33/1	3000	2600	4500	4.7	4.0	2.0	136	35
91	227	246	30	2.2	PHQ731_0055K202_0060 EZ502U	740	740	1000	33.00	33/1	3000	2600	4500	7.0	4.0	2.0	136	35
91	227	255	30	2.2	PHQ731_0055K202_0060 EZ701U	610	610	2100	33.00	33/1	3000	2600	4500	10	4.0	2.0	136	37
91	298	341	39	1.7	PHQ731_0055K202_0060 EZ503U	740	740	1000	33.00	33/1	3000	2600	4500	9.3	4.0	2.0	136	36
91	369	443	48	1.4	PHQ731_0055K202_0060 EZ702U	1050	1050	2100	33.00	33/1	3000	2600	4500	15	4.0	2.0	136	39
91	415	492	54	1.2	PHQ731_0055K202_0060 EZ505U	1050	1050	2100	33.00	33/1	3000	2600	4500	14	4.0	2.0	136	39
105	196	220	29	2.5	PHQ731_0055K202_0052 EZ701U	530	530	2100	28.47	2107/74	3000	2600	4500	10	4.0	2.0	136	37
105	318	382	46	1.6	PHQ731_0055K202_0052 EZ702U	1000	1000	2100	28.47	2107/74	3000	2600	4500	15	4.0	2.0	136	39
105	358	424	52	1.4	PHQ731_0055K202_0052 EZ505U	1000	1000	2100	28.47	2107/74	3000	2600	4500	14	4.0	2.0	136	39
105	437	552	64	1.1	PHQ731_0055K202_0052 EZ703U	1000	1000	2100	28.47	2107/74	3000	2600	4500	23	4.0	2.0	136	41
125	105	116	17	4.8	PHQ731_0055K202_0044 EZ402U	360	360	730	24.00	24/1	3000	2600	4500	3.8	4.0	2.0	136	33
125	154	192	26	3.2	PHQ731_0055K202_0044 EZ404U	540	540	730	24.00	24/1	3000	2600	4500	5.2	4.0	2.0	136	35
125	165	179	27	3.0	PHQ731_0055K202_0044 EZ502U	540	540	730	24.00	24/1	3000	2600	4500	7.4	4.0	2.0	136	35
125	165	186	27	3.0	PHQ731_0055K202_0044 EZ701U	450	450	1820	24.00	24/1	3000	2600	4500	11	4.0	2.0	136	37
125	217	248	36	2.3	PHQ731_0055K202_0044 EZ503U	540	540	730	24.00	24/1	3000	2600	4500	9.8	4.0	2.0	136	36
125	268	322	44	1.9	PHQ731_0055K202_0044 EZ702U	920	920	1820	24.00	24/1	3000	2600	4500	16	4.0	2.0	136	39
125	302	358	50	1.7	PHQ731_0055K202_0044 EZ505U	950	950	1820	24.00	24/1	3000	2600	4500	14	4.0	2.0	136	39
125	369	465	61	1.4	PHQ731_0055K202_0044 EZ703U	950	950	1820	24.00	24/1	3000	2600	4500	24	4.0	2.0	136	41
136	152	170	27	3.2	PHQ731_0055K202_0040 EZ701U	410	410	1670	22.00	22/1	3000	2600	4500	11	4.0	2.0	136	37
136	246	295	45	2.0	PHQ731_0055K202_0040 EZ702U	840	840	1670	22.00	22/1	3000	2600	4500	16	4.0	2.0	136	39
136	277	328	50	1.8	PHQ731_0055K202_0040 EZ505U	920	920	1670	22.00	22/1	3000	2600	4500	15	4.0	2.0	136	39
136	338	426	61	1.4	PHQ731_0055K202_0040 EZ703U	920	920	1670	22.00	22/1	3000	2600	4500	24	4.0	2.0	136	41
PHQ731K (n_{1N} = 4500 rpm, $M_{2acc,max}$ = 1050 Nm)																		
81	490	789	43	1.0	PHQ731_0055K202_0100 EZ505U	1050	1050	2100	55.40	2881/52	3900	3500	5500	13	4.0	2.0	136	39
89	447	720	42	1.1	PHQ731_0055K202_0092 EZ505U	1050	1050	2100	50.55	25069/496	3500	3100	5000	13	4.0	2.0	136	39

n_{2N} [rpm]	M_{2N} [Nm]	$M_{2,0}$ [Nm]	a_{th}	S	Type	M_{2acc} [Nm]	M_{2accHT} [Nm]	M_{2NOT} [Nm]	i	i_{exakt}	n_{1maxDB} EL1,2 [rpm]	n_{1maxDB} EL3,4,5,6 [rpm]	n_{1maxZB} [rpm]	J_1 [kgcm²]	$\Delta\varphi_2$ [arc min]	$\Delta\varphi_{2red}$ [arc min]	C_2 [Nm/ arcmin]	m [kg]
PHQ731K (n_{1N} = 4500 rpm, $M_{2acc,max}$ = 1050 Nm)																		
97	409	658	41	1.2	PHQ731_0055K202_0084 EZ505U	1050	1050	2100	46.18	1247/27	3500	3100	5000	13	4.0	2.0	136	39
115	346	558	40	1.4	PHQ731_0055K202_0071 EZ505U	1050	1050	2100	39.15	23177/592	3000	2600	4500	14	4.0	2.0	136	39
115	441	729	51	1.1	PHQ731_0055K202_0071 EZ703U	1050	1050	2100	39.15	23177/592	3000	2600	4500	23	4.0	2.0	136	41
122	325	524	39	1.5	PHQ731_0055K202_0067 EZ505U	1050	1050	2100	36.76	2279/62	3500	3100	5000	13	4.0	2.0	136	39
122	414	685	50	1.2	PHQ731_0055K202_0067 EZ703U	1050	1050	2100	36.76	2279/62	3500	3100	5000	23	4.0	2.0	136	41
136	292	470	39	1.7	PHQ731_0055K202_0060 EZ505U	1050	1050	2100	33.00	33/1	3000	2600	4500	14	4.0	2.0	136	39
136	372	615	50	1.3	PHQ731_0055K202_0060 EZ703U	1050	1050	2100	33.00	33/1	3000	2600	4500	23	4.0	2.0	136	41
158	252	406	40	1.8	PHQ731_0055K202_0052 EZ505U	1000	1000	2100	28.47	2107/74	3000	2600	4500	14	4.0	2.0	136	39
158	321	530	50	1.4	PHQ731_0055K202_0052 EZ703U	1000	1000	2100	28.47	2107/74	3000	2600	4500	23	4.0	2.0	136	41
187	212	342	40	2.1	PHQ731_0055K202_0044 EZ505U	950	950	1820	24.00	24/1	3000	2600	4500	14	4.0	2.0	136	39
187	270	447	51	1.6	PHQ731_0055K202_0044 EZ703U	950	950	1820	24.00	24/1	3000	2600	4500	24	4.0	2.0	136	41
205	195	313	40	2.2	PHQ731_0055K202_0040 EZ505U	920	920	1670	22.00	22/1	3000	2600	4500	15	4.0	2.0	136	39
205	248	410	51	1.7	PHQ731_0055K202_0040 EZ703U	920	920	1670	22.00	22/1	3000	2600	4500	24	4.0	2.0	136	41
PHQ731K (n_{1N} = 6000 rpm, $M_{2acc,max}$ = 1050 Nm)																		
20	427	478	10	1.2	PHQ731_0055K202_0560 EZ302U	1010	1010	1560	305.5	14663/48	4000	3900	6500	0.34	4.0	2.0	136	30
22	388	434	10	1.3	PHQ731_0055K202_0500 EZ302U	610	610	1060	277.7	6665/24	4000	3900	6500	0.33	4.0	2.0	136	30
24	355	398	10	1.4	PHQ731_0055K202_0460 EZ302U	1050	1050	1480	254.2	20339/80	4000	3900	6500	0.36	4.0	2.0	136	30
24	464	533	13	1.1	PHQ731_0055K202_0460 EZ303U	1050	1050	1480	254.2	20339/80	4000	3900	6500	0.47	4.0	2.0	136	31
27	310	348	9.7	1.6	PHQ731_0055K202_0400 EZ302U	730	730	1130	222.2	1333/6	4000	3900	6500	0.35	4.0	2.0	136	30
27	405	465	13	1.2	PHQ731_0055K202_0400 EZ303U	730	730	1130	222.2	1333/6	4000	3900	6500	0.46	4.0	2.0	136	31
32	265	297	9.3	1.9	PHQ731_0055K202_0350 EZ302U	880	880	1230	190.0	21285/112	4000	3900	6500	0.41	4.0	2.0	136	30
32	347	398	12	1.4	PHQ731_0055K202_0350 EZ303U	910	910	1230	190.0	21285/112	4000	3900	6500	0.52	4.0	2.0	136	31
32	407	496	14	1.2	PHQ731_0055K202_0350 EZ401U	1050	1050	2100	190.0	21285/112	4000	3900	6500	1.1	4.0	2.0	136	32
32	258	289	9.2	1.9	PHQ731_0055K202_0340 EZ302U	790	790	1070	184.9	1849/10	4000	3900	6500	0.37	4.0	2.0	136	30
32	337	387	12	1.5	PHQ731_0055K202_0340 EZ303U	790	790	1070	184.9	1849/10	4000	3900	6500	0.48	4.0	2.0	136	31
32	396	482	14	1.3	PHQ731_0055K202_0340 EZ401U	980	980	1760	184.9	1849/10	4000	3900	6500	1.0	4.0	2.0	136	32
39	329	401	14	1.5	PHQ731_0055K202_0280 EZ401U	1050	1050	2100	153.7	6149/40	4000	3900	6500	1.1	4.0	2.0	136	32
39	487	630	20	1.0	PHQ731_0055K202_0280 EZ501U	1050	1050	2100	153.7	6149/40	4000	3900	6500	3.1	4.0	2.0	136	33
43	193	216	8.6	2.6	PHQ731_0055K202_0250 EZ302U	640	640	890	138.2	1935/14	4000	3900	6500	0.43	4.0	2.0	136	30
43	252	290	11	2.0	PHQ731_0055K202_0250 EZ303U	660	660	890	138.2	1935/14	4000	3900	6500	0.54	4.0	2.0	136	31
43	296	360	13	1.7	PHQ731_0055K202_0250 EZ401U	1050	1050	2100	138.2	1935/14	4000	3900	6500	1.1	4.0	2.0	136	32
43	438	566	19	1.1	PHQ731_0055K202_0250 EZ501U	1050	1050	2100	138.2	1935/14	4000	3900	6500	3.0	4.0	2.0	136	33
43	450	631	20	1.1	PHQ731_0055K202_0250 EZ402U	1050	1050	2100	138.2	1935/14	4000	3900	6500	1.8	4.0	2.0	136	33
47	178	199	8.4	2.8	PHQ731_0055K202_0230 EZ302U	590	590	970	127.5	32637/256	4000	3900	6500	0.53	4.0	2.0	136	30
47	233	267	11	2.1	PHQ731_0055K202_0230 EZ303U	710	710	970	127.5	32637/256	4000	3900	6500	0.64	4.0	2.0	136	31
47	273	332	13	1.8	PHQ731_0055K202_0230 EZ401U	1010	1010	2100	127.5	32637/256	4000	3900	6500	1.2	4.0	2.0	136	32
47	404	522	19	1.2	PHQ731_0055K202_0230 EZ501U	1050	1050	2100	127.5	32637/256	4000	3900	6500	3.1	4.0	2.0	136	33
47	416	582	20	1.2	PHQ731_0055K202_0230 EZ402U	1050	1050	2100	127.5	32637/256	4000	3900	6500	1.9	4.0	2.0	136	33
54	239	291	13	2.1	PHQ731_0055K202_0200 EZ401U	880	880	2100	111.8	559/5	4000	3900	6500	1.1	4.0	2.0	136	32
54	354	458	18	1.4	PHQ731_0055K202_0200 EZ501U	1050	1050	2100	111.8	559/5	4000	3900	6500	3.1	4.0	2.0	136	33
54	364	510	19	1.4	PHQ731_0055K202_0200 EZ402U	1050	1050	2100	111.8	559/5	4000	3900	6500	1.8	4.0	2.0	136	33
65	130	145	7.8	3.9	PHQ731_0055K202_0170 EZ302U	430	430	700	92.72	2967/32	4000	3900	6500	0.56	4.0	2.0	136	30
65	169	194	10	3.0	PHQ731_0055K202_0170 EZ303U	520	520	700	92.72	2967/32	4000	3900	6500	0.67	4.0	2.0	136	31
65	199	242	12	2.5	PHQ731_0055K202_0170 EZ401U	730	730	2100	92.72	2967/32	4000	3900	6500	1.2	4.0	2.0	136	32
65	294	380	18	1.7	PHQ731_0055K202_0170 EZ501U	1050	1050	2100	92.72	2967/32	4000	3900	6500	3.2	4.0	2.0	136	33
65	302	423	18	1.7	PHQ731_0055K202_0170 EZ402U	1050	1050	2100	92.72	2967/32	4000	3900	6500	1.9	4.0	2.0	136	33
65	449	673	27	1.1	PHQ731_0055K202_0170 EZ502U	1050	1050	2100	92.72	2967/32	4000	3900	6500	5.5	4.0	2.0	136	35
65	449	682	27	1.1	PHQ731_0055K202_0170 EZ701U	1050	1050	2100	92.72	2967/32	4000	3900	6500	8.8	4.0	2.0	136	37
PHQ831K (n_{1N} = 2000 rpm, $M_{2acc,max}$ = 2770 Nm)																		
61	1343	2031	75	1.0	PHQ831_0055K402_0060 EZ805U	2770	2770	5090	33.00	33/1	2600	2200	3800	140	3.5	1.5	400	111
67	1214	1836	73	1.2	PHQ831_0055K402_0054 EZ805U	2680	2680	5090	29.82	1849/62	2600	2200	3800	139	3.5	1.5	400	111
83	977	1477	69	1.4	PHQ831_0055K402_0044 EZ805U	2490	2490	4850	24.00	24/1	2600	2200	3800	142	3.5	1.5	400	111
91	895	1354	68	1.6	PHQ831_0055K402_0040 EZ805U	2420	2420	4450	22.00	22/1	2600	2200	3800	143	3.5	1.5	400	111
PHQ831K (n_{1N} = 3000 rpm, $M_{2acc,max}$ = 2800 Nm)																		
9.8	1227	1341	13	1.1	PHQ831_0055K402_0560 EZ501U	2680	2680	4850	306.4	2451/8	3600	3300	5500	3.1	3.5	1.5	400	70
11	1111	1214	13	1.3	PHQ831_0055K402_0500 EZ501U	1710	1710	3090	277.3	5547/20	3600	3300	5500	3.1	3.5	1.5	400	70
12	1020	1115	12	1.4	PHQ831_0055K402_0460 EZ501U	2800	3170	5090	254.7	3311/13	3600	3300	5500	3.2	3.5	1.5	400	70
13	892	975	12	1.6	PHQ831_0055K402_0410 EZ501U	1950	1950	3530	222.8	2451/11	3600	3300	5500	3.1	3.5	1.5	400	70
16	765	837	11	1.8	PHQ831_0055K402_0350 EZ501U	2800	2850	4620	191.2	45881/240	3600	3300	5500	3.4	3.5	1.5	400	70
16	1317	1424	20	1.1	PHQ831_0055K402_0350 EZ502U	2800	3170	4620	191.2	45881/240	3600	3300	5500	5.7	3.5	1.5	400	72
16	1317	1478	20	1.1	PHQ831_0055K402_0350 EZ701U	2800	3170	5090	191.2	45881/240	3600	3300	5500	9.0	3.5	1.5	400	74
16	742	811	11	1.9	PHQ831_0055K402_0340 EZ501U	2460	2460	4100	185.2	2408/13	3600	3300	5500	3.2	3.5	1.5	400	70
16	1276	1380	20	1.1	PHQ831_0055K402_0340 EZ502U	2460	2460	4100	185.2	2408/13	3600	3300	5500	5.5	3.5	1.5	400	72

n_{2N} [rpm]	M_{2N} [Nm]	$M_{2,0}$ [Nm]	a_{th}	S	Type	M_{2acc} [Nm]	M_{2accHT} [Nm]	M_{2NOT} [Nm]	i	i_{exakt}	n_{1maxDB} EL1,2 [rpm]	n_{1maxDB} EL3,4,5,6 [rpm]	n_{1maxZB} [rpm]	J_1 [kgcm²]	$\Delta\varphi_2$ [arc min]	$\Delta\varphi_{2red}$ [arc min]	C_2 [Nm/ arcmin]	m [kg]
PHQ831K (n_{1N} = 3000 rpm, $M_{2acc,max}$ = 2800 Nm)																		
16	1276	1432	20	1.1	PHQ831_0055K402_0340 EZ701U	2460	2460	4100	185.2	2408/13	3600	3300	5500	8.8	3.5	1.5	400	74
20	612	668	11	2.3	PHQ831_0055K402_0280 EZ501U	2280	2280	4270	152.7	14663/96	3600	3300	5500	3.6	3.5	1.5	400	70
20	1053	1138	19	1.3	PHQ831_0055K402_0280 EZ502U	2800	3150	4270	152.7	14663/96	3600	3300	5500	5.9	3.5	1.5	400	72
20	1053	1181	19	1.3	PHQ831_0055K402_0280 EZ701U	2800	2840	5090	152.7	14663/96	3600	3300	5500	9.2	3.5	1.5	400	74
20	1380	1579	24	1.0	PHQ831_0055K402_0280 EZ503U	2800	3150	4270	152.7	14663/96	3600	3300	5500	8.2	3.5	1.5	400	73
22	557	609	11	2.5	PHQ831_0055K402_0250 EZ501U	2070	2070	3360	139.0	4171/30	3600	3300	5500	3.4	3.5	1.5	400	70
22	958	1036	18	1.5	PHQ831_0055K402_0250 EZ502U	2480	2480	3360	139.0	4171/30	3600	3300	5500	5.7	3.5	1.5	400	72
22	958	1075	18	1.5	PHQ831_0055K402_0250 EZ701U	2590	2590	5090	139.0	4171/30	3600	3300	5500	9.0	3.5	1.5	400	74
22	1256	1437	24	1.1	PHQ831_0055K402_0250 EZ503U	2480	2480	3360	139.0	4171/30	3600	3300	5500	8.1	3.5	1.5	400	73
23	513	561	10	2.7	PHQ831_0055K402_0230 EZ501U	1910	1910	3880	128.1	6149/48	3600	3300	5500	3.8	3.5	1.5	400	70
23	883	954	18	1.6	PHQ831_0055K402_0230 EZ502U	2800	2860	3880	128.1	6149/48	3600	3300	5500	6.1	3.5	1.5	400	72
23	883	990	18	1.6	PHQ831_0055K402_0230 EZ701U	2390	2390	5090	128.1	6149/48	3600	3300	5500	9.4	3.5	1.5	400	74
23	1157	1324	23	1.2	PHQ831_0055K402_0230 EZ503U	2800	2860	3880	128.1	6149/48	3600	3300	5500	8.5	3.5	1.5	400	73
27	445	486	10	3.1	PHQ831_0055K402_0200 EZ501U	1660	1660	3110	111.1	1333/12	3600	3300	5500	3.7	3.5	1.5	400	70
27	765	828	17	1.8	PHQ831_0055K402_0200 EZ502U	2290	2290	3110	111.1	1333/12	3600	3300	5500	6.0	3.5	1.5	400	72
27	765	859	17	1.8	PHQ831_0055K402_0200 EZ701U	2070	2070	5090	111.1	1333/12	3600	3300	5500	9.3	3.5	1.5	400	74
27	1003	1148	23	1.4	PHQ831_0055K402_0200 EZ503U	2290	2290	3110	111.1	1333/12	3600	3300	5500	8.3	3.5	1.5	400	73
27	1241	1490	28	1.1	PHQ831_0055K402_0200 EZ702U	2800	3170	5090	111.1	1333/12	3600	3300	5500	14	3.5	1.5	400	76
27	1396	1655	31	1.0	PHQ831_0055K402_0200 EZ505U	2800	3170	5090	111.1	1333/12	3600	3300	5500	13	3.5	1.5	400	76
31	660	740	17	2.1	PHQ831_0055K402_0175 EZ701U	1780	1780	5090	95.73	8041/84	3400	3000	5000	9.9	3.5	1.5	400	74
31	1070	1284	27	1.3	PHQ831_0055K402_0175 EZ702U	2800	3170	5090	95.73	8041/84	3400	3000	5000	15	3.5	1.5	400	76
31	1203	1426	30	1.2	PHQ831_0055K402_0175 EZ505U	2800	3170	5090	95.73	8041/84	3400	3000	5000	14	3.5	1.5	400	76
32	373	408	9.6	3.8	PHQ831_0055K402_0170 EZ501U	1390	1390	2820	93.16	559/6	3600	3300	5500	3.9	3.5	1.5	400	70
32	642	694	16	2.2	PHQ831_0055K402_0170 EZ502U	2080	2080	2820	93.16	559/6	3600	3300	5500	6.2	3.5	1.5	400	72
32	642	720	16	2.2	PHQ831_0055K402_0170 EZ701U	1740	1740	5090	93.16	559/6	3600	3300	5500	9.5	3.5	1.5	400	74
32	842	963	22	1.7	PHQ831_0055K402_0170 EZ503U	2080	2080	2820	93.16	559/6	3600	3300	5500	8.6	3.5	1.5	400	73
32	1041	1249	27	1.3	PHQ831_0055K402_0170 EZ702U	2800	3170	5090	93.16	559/6	3600	3300	5500	15	3.5	1.5	400	76
32	1171	1388	30	1.2	PHQ831_0055K402_0170 EZ505U	2800	3170	5090	93.16	559/6	3600	3300	5500	13	3.5	1.5	400	76
39	526	590	16	2.7	PHQ831_0055K402_0140 EZ701U	1420	1420	5090	76.37	14663/192	3400	3000	5000	11	3.5	1.5	400	74
39	853	1024	25	1.6	PHQ831_0055K402_0140 EZ702U	2800	2920	5090	76.37	14663/192	3400	3000	5000	16	3.5	1.5	400	76
39	960	1138	29	1.5	PHQ831_0055K402_0140 EZ505U	2800	3170	5090	76.37	14663/192	3400	3000	5000	14	3.5	1.5	400	76
39	1173	1479	35	1.2	PHQ831_0055K402_0140 EZ703U	2800	3170	5090	76.37	14663/192	3400	3000	5000	24	3.5	1.5	400	78
43	480	538	15	2.9	PHQ831_0055K402_0125 EZ701U	1300	1300	4980	69.62	1462/21	3400	3000	5000	10	3.5	1.5	400	74
43	778	934	25	1.8	PHQ831_0055K402_0125 EZ702U	2660	2660	4980	69.62	1462/21	3400	3000	5000	15	3.5	1.5	400	76
43	875	1037	28	1.6	PHQ831_0055K402_0125 EZ505U	2800	3170	4980	69.62	1462/21	3400	3000	5000	14	3.5	1.5	400	76
43	1070	1348	34	1.3	PHQ831_0055K402_0125 EZ703U	2800	3170	4980	69.62	1462/21	3400	3000	5000	23	3.5	1.5	400	78
43	1381	1958	44	1.0	PHQ831_0055K402_0125 EZ705U	2800	3170	5090	69.62	1462/21	3400	3000	5000	36	3.5	1.5	400	84
47	437	490	15	3.2	PHQ831_0055K402_0115 EZ701U	1180	1180	4800	63.35	7095/112	3000	2600	4500	11	3.5	1.5	400	74
47	708	849	24	2.0	PHQ831_0055K402_0115 EZ702U	2420	2420	4800	63.35	7095/112	3000	2600	4500	16	3.5	1.5	400	76
47	796	944	27	1.8	PHQ831_0055K402_0115 EZ505U	2800	3170	4800	63.35	7095/112	3000	2600	4500	15	3.5	1.5	400	76
47	973	1227	33	1.4	PHQ831_0055K402_0115 EZ703U	2800	3170	4800	63.35	7095/112	3000	2600	4500	24	3.5	1.5	400	78
47	1257	1782	43	1.1	PHQ831_0055K402_0115 EZ705U	2800	3170	5090	63.35	7095/112	3000	2600	4500	37	3.5	1.5	400	84
54	383	429	14	3.7	PHQ831_0055K402_0100 EZ701U	1030	1030	4210	55.54	1333/24	3400	3000	5000	11	3.5	1.5	400	74
54	621	745	23	2.3	PHQ831_0055K402_0100 EZ702U	2120	2120	4210	55.54	1333/24	3400	3000	5000	16	3.5	1.5	400	76
54	698	827	26	2.0	PHQ831_0055K402_0100 EZ505U	2800	3100	4210	55.54	1333/24	3400	3000	5000	15	3.5	1.5	400	76
54	853	1076	32	1.6	PHQ831_0055K402_0100 EZ703U	2800	3100	4210	55.54	1333/24	3400	3000	5000	24	3.5	1.5	400	78
54	1102	1562	42	1.3	PHQ831_0055K402_0100 EZ705U	2800	3170	5090	55.54	1333/24	3400	3000	5000	36	3.5	1.5	400	84
54	1153	1919	44	1.2	PHQ831_0055K402_0100 EZ802U	2800	3170	5090	55.54	1333/24	3400	3000	5000	60	3.5	1.5	400	92
59	350	393	14	4.0	PHQ831_0055K402_0092 EZ701U	950	950	3850	50.81	26015/512	3000	2600	4500	12	3.5	1.5	400	74
59	568	681	23	2.5	PHQ831_0055K402_0092 EZ702U	1940	1940	3850	50.81	26015/512	3000	2600	4500	17	3.5	1.5	400	76
59	639	757	26	2.2	PHQ831_0055K402_0092 EZ505U	2800	2840	3850	50.81	26015/512	3000	2600	4500	16	3.5	1.5	400	76
59	781	984	32	1.8	PHQ831_0055K402_0092 EZ703U	2800	2840	3850	50.81	26015/512	3000	2600	4500	25	3.5	1.5	400	78
59	1008	1429	41	1.4	PHQ831_0055K402_0092 EZ705U	2800	3170	5090	50.81	26015/512	3000	2600	4500	38	3.5	1.5	400	84
59	1055	1755	43	1.3	PHQ831_0055K402_0092 EZ802U	2800	3170	5090	50.81	26015/512	3000	2600	4500	62	3.5	1.5	400	92
65	317	356	14	4.4	PHQ831_0055K402_0084 EZ701U	860	860	3490	46.07	645/14	3000	2600	4500	12	3.5	1.5	400	74
65	515	618	22	2.7	PHQ831_0055K402_0084 EZ702U	1760	1760	3490	46.07	645/14	3000	2600	4500	17	3.5	1.5	400	76
65	579	686	25	2.4	PHQ831_0055K402_0084 EZ505U	2570	2570	3490	46.07	645/14	3000	2600	4500	15	3.5	1.5	400	76
65	708	892	31	2.0	PHQ831_0055K402_0084 EZ703U	2570	2570	3490	46.07	645/14	3000	2600	4500	25	3.5	1.5	400	78
65	914	1296	40	1.5	PHQ831_0055K402_0084 EZ705U	2800	3100	5090	46.07	645/14	3000	2600	4500	37	3.5	1.5	400	84
65	957	1592	42	1.5	PHQ831_0055K402_0084 EZ802U	2800	3100	5090	46.07	645/14	3000	2600	4500	61	3.5	1.5	400	92
65	1141	2068	50	1.2	PHQ831_0055K402_0084 EZ803U	2800	3100	5090	46.07	645/14	3000	2600	4500	87	3.5	1.5	400	98
73	813	1153	39	1.7	PHQ831_0055K402_0075 EZ705U	2800	2980	5090	41.01	20339/496	2600	2200	3800	39	3.5	1.5	400	84
73	852	1417	40	1.6	PHQ831_0055K402_0075 EZ802U	2800	2980	5090	41.01	20339/496	2600	2200	3800	63	3.5	1.5	400	92
73	1016	1841	48	1.4	PHQ831_0055K402_0075 EZ803U	2800	2980	5090	41.01	20339/496	2600	2200	3800	89	3.5	1.5	400	98

n_{2N} [rpm]	M_{2N} [Nm]	$M_{2,0}$ [Nm]	a_{th}	S	Type	M_{2acc} [Nm]	M_{2accHT} [Nm]	M_{2NOT} [Nm]	i	i_{exakt}	n_{1maxDB} EL1,2 [rpm]	n_{1maxDB} EL3,4,5,6 [rpm]	n_{1maxZB} [rpm]	J_1 [kgcm²]	$\Delta\varphi_2$ [arc min]	$\Delta\varphi_{2red}$ [arc min]	C_2 [Nm/ arcmin]	m [kg]
PHQ831K (n_{1N} = 3000 rpm, $M_{2acc,max}$ = 2800 Nm)																		
81	413	496	21	3.4	PHQ831_0055K402_0067 EZ702U	1410	1410	2800	36.95	2365/64	3000	2600	4500	18	3.5	1.5	400	76
81	465	551	24	3.0	PHQ831_0055K402_0067 EZ505U	2070	2070	2800	36.95	2365/64	3000	2600	4500	17	3.5	1.5	400	76
81	568	716	29	2.5	PHQ831_0055K402_0067 EZ703U	2070	2070	2800	36.95	2365/64	3000	2600	4500	26	3.5	1.5	400	78
81	733	1039	38	1.9	PHQ831_0055K402_0067 EZ705U	2800	2880	5090	36.95	2365/64	3000	2600	4500	39	3.5	1.5	400	84
81	767	1277	39	1.8	PHQ831_0055K402_0067 EZ802U	2800	2880	5090	36.95	2365/64	3000	2600	4500	63	3.5	1.5	400	92
81	915	1659	47	1.5	PHQ831_0055K402_0067 EZ803U	2800	2880	5090	36.95	2365/64	3000	2600	4500	88	3.5	1.5	400	98
91	655	928	37	2.1	PHQ831_0055K402_0060 EZ705U	2770	2770	5090	33.00	33/1	2600	2200	3800	41	3.5	1.5	400	84
91	685	1140	38	2.0	PHQ831_0055K402_0060 EZ802U	2770	2770	5090	33.00	33/1	2600	2200	3800	65	3.5	1.5	400	92
91	817	1481	46	1.7	PHQ831_0055K402_0060 EZ803U	2770	2770	5090	33.00	33/1	2600	2200	3800	91	3.5	1.5	400	98
101	591	839	36	2.4	PHQ831_0055K402_0054 EZ705U	2680	2680	5090	29.82	1849/62	2600	2200	3800	40	3.5	1.5	400	84
101	619	1030	37	2.3	PHQ831_0055K402_0054 EZ802U	2680	2680	5090	29.82	1849/62	2600	2200	3800	65	3.5	1.5	400	92
101	739	1338	45	1.9	PHQ831_0055K402_0054 EZ803U	2680	2680	5090	29.82	1849/62	2600	2200	3800	90	3.5	1.5	400	98
125	476	675	36	2.8	PHQ831_0055K402_0044 EZ705U	2320	2320	4850	24.00	24/1	2600	2200	3800	43	3.5	1.5	400	84
125	498	829	38	2.6	PHQ831_0055K402_0044 EZ802U	2240	2240	4850	24.00	24/1	2600	2200	3800	67	3.5	1.5	400	92
125	595	1077	45	2.2	PHQ831_0055K402_0044 EZ803U	2490	2490	4850	24.00	24/1	2600	2200	3800	93	3.5	1.5	400	98
136	436	619	36	2.9	PHQ831_0055K402_0040 EZ705U	2130	2130	4450	22.00	22/1	2600	2200	3800	44	3.5	1.5	400	84
136	457	760	38	2.8	PHQ831_0055K402_0040 EZ802U	2050	2050	4450	22.00	22/1	2600	2200	3800	69	3.5	1.5	400	92
136	545	987	45	2.4	PHQ831_0055K402_0040 EZ803U	2420	2420	4450	22.00	22/1	2600	2200	3800	94	3.5	1.5	400	98
PHQ831K (n_{1N} = 4500 rpm, $M_{2acc,max}$ = 2800 Nm)																		
32	1230	1981	23	1.1	PHQ831_0055K402_0250 EZ505U	2800	3170	5090	139.0	4171/30	3600	3300	5500	13	3.5	1.5	400	76
35	1133	1825	23	1.2	PHQ831_0055K402_0230 EZ505U	2800	3170	5090	128.1	6149/48	3600	3300	5500	13	3.5	1.5	400	76
41	983	1583	22	1.4	PHQ831_0055K402_0200 EZ505U	2800	3170	5090	111.1	1333/12	3600	3300	5500	13	3.5	1.5	400	76
41	1252	2069	28	1.1	PHQ831_0055K402_0200 EZ703U	2800	3170	5090	111.1	1333/12	3600	3300	5500	22	3.5	1.5	400	78
47	847	1364	21	1.7	PHQ831_0055K402_0175 EZ505U	2800	3170	5090	95.73	8041/84	3400	3000	5000	14	3.5	1.5	400	76
47	1079	1783	27	1.3	PHQ831_0055K402_0175 EZ703U	2800	3170	5090	95.73	8041/84	3400	3000	5000	23	3.5	1.5	400	78
48	824	1327	21	1.7	PHQ831_0055K402_0170 EZ505U	2800	3170	5090	93.16	559/6	3600	3300	5500	13	3.5	1.5	400	76
48	1050	1735	27	1.3	PHQ831_0055K402_0170 EZ703U	2800	3170	5090	93.16	559/6	3600	3300	5500	23	3.5	1.5	400	78
59	676	1088	20	2.1	PHQ831_0055K402_0140 EZ505U	2800	3170	5090	76.37	14663/192	3400	3000	5000	14	3.5	1.5	400	76
59	860	1422	26	1.6	PHQ831_0055K402_0140 EZ703U	2800	3170	5090	76.37	14663/192	3400	3000	5000	24	3.5	1.5	400	78
59	1166	2133	35	1.2	PHQ831_0055K402_0140 EZ705U	2800	3170	5090	76.37	14663/192	3400	3000	5000	36	3.5	1.5	400	84
65	616	992	20	2.3	PHQ831_0055K402_0125 EZ505U	2800	3170	4980	69.62	1462/21	3400	3000	5000	14	3.5	1.5	400	76
65	784	1297	25	1.8	PHQ831_0055K402_0125 EZ703U	2800	3170	4980	69.62	1462/21	3400	3000	5000	23	3.5	1.5	400	78
65	1063	1945	34	1.3	PHQ831_0055K402_0125 EZ705U	2800	3170	5090	69.62	1462/21	3400	3000	5000	36	3.5	1.5	400	84
71	560	903	19	2.5	PHQ831_0055K402_0115 EZ505U	2800	3170	4800	63.35	7095/112	3000	2600	4500	15	3.5	1.5	400	76
71	619	2035	21	2.3	PHQ831_0055K402_0115 EZ802U	2800	3170	5090	63.35	7095/112	3000	2600	4500	61	3.5	1.5	400	92
71	714	1180	24	2.0	PHQ831_0055K402_0115 EZ703U	2800	3170	4800	63.35	7095/112	3000	2600	4500	24	3.5	1.5	400	78
71	967	1770	33	1.4	PHQ831_0055K402_0115 EZ705U	2800	3170	5090	63.35	7095/112	3000	2600	4500	37	3.5	1.5	400	84
81	491	791	19	2.8	PHQ831_0055K402_0100 EZ505U	2800	3100	4210	55.54	1333/24	3400	3000	5000	15	3.5	1.5	400	76
81	543	1784	21	2.6	PHQ831_0055K402_0100 EZ802U	2800	3170	5090	55.54	1333/24	3400	3000	5000	60	3.5	1.5	400	92
81	626	1034	24	2.2	PHQ831_0055K402_0100 EZ703U	2800	3100	4210	55.54	1333/24	3400	3000	5000	24	3.5	1.5	400	78
81	848	1552	32	1.7	PHQ831_0055K402_0100 EZ705U	2800	3170	5090	55.54	1333/24	3400	3000	5000	36	3.5	1.5	400	84
89	449	724	18	3.1	PHQ831_0055K402_0092 EZ505U	2800	2840	3850	50.81	26015/512	3000	2600	4500	16	3.5	1.5	400	76
89	497	1632	20	2.8	PHQ831_0055K402_0092 EZ802U	2800	3170	5090	50.81	26015/512	3000	2600	4500	62	3.5	1.5	400	92
89	572	946	23	2.4	PHQ831_0055K402_0092 EZ703U	2800	2840	3850	50.81	26015/512	3000	2600	4500	25	3.5	1.5	400	78
89	776	1419	31	1.8	PHQ831_0055K402_0092 EZ705U	2800	3170	5090	50.81	26015/512	3000	2600	4500	38	3.5	1.5	400	84
98	408	656	18	3.4	PHQ831_0055K402_0084 EZ505U	2570	2570	3490	46.07	645/14	3000	2600	4500	15	3.5	1.5	400	76
98	450	1480	20	3.1	PHQ831_0055K402_0084 EZ802U	2800	3100	5090	46.07	645/14	3000	2600	4500	61	3.5	1.5	400	92
98	519	858	23	2.7	PHQ831_0055K402_0084 EZ703U	2570	2570	3490	46.07	645/14	3000	2600	4500	25	3.5	1.5	400	78
98	704	1287	31	2.0	PHQ831_0055K402_0084 EZ705U	2800	3100	5090	46.07	645/14	3000	2600	4500	37	3.5	1.5	400	84
122	327	527	18	4.1	PHQ831_0055K402_0067 EZ505U	2070	2070	2800	36.95	2365/64	3000	2600	4500	17	3.5	1.5	400	76
122	361	1187	20	3.7	PHQ831_0055K402_0067 EZ802U	2800	2880	5090	36.95	2365/64	3000	2600	4500	63	3.5	1.5	400	92
122	416	688	23	3.2	PHQ831_0055K402_0067 EZ703U	2070	2070	2800	36.95	2365/64	3000	2600	4500	26	3.5	1.5	400	78
122	564	1032	30	2.4	PHQ831_0055K402_0067 EZ705U	2800	2880	5090	36.95	2365/64	3000	2600	4500	39	3.5	1.5	400	84
PHQ931K (n_{1N} = 2000 rpm, $M_{2acc,max}$ = 5760 Nm)																		
29	2784	4211	53	1.4	PHQ931_0060K513_0115 EZ805U	5760	–	11250	69.41	10759/155	2300	2200	3600	141	4.0	–	771	133
33	2442	3694	51	1.6	PHQ931_0060K513_0100 EZ805U	5760	–	11250	60.90	609/10	1900	1800	3200	143	4.0	–	771	133
36	2206	3337	49	1.7	PHQ931_0060K513_0092 EZ805U	5760	–	10950	55.01	8526/155	1900	1800	3200	145	4.0	–	771	133
41	1957	2961	48	1.9	PHQ931_0060K513_0081 EZ805U	5760	–	9720	48.80	17081/350	1900	1800	3200	147	4.0	–	771	133
45	1768	2674	48	2.1	PHQ931_0060K513_0073 EZ805U	5760	–	8780	44.08	1102/25	1900	1800	3200	149	4.0	–	771	133
PHQ931K (n_{1N} = 3000 rpm, $M_{2acc,max}$ = 5760 Nm)																		
5.2	2288	2501	9.8	1.7	PHQ931_0060K513_0970 EZ501U	5280	–	9110	579.9	115971/200	3400	3000	5000	3.2	4.0	–	771	93
5.7	2067	2259	9.5	1.8	PHQ931_0060K513_0870 EZ501U	4760	–	8230	523.7	26187/50	3400	3000	5000	3.2	4.0	–	771	93
6.4	1837	2008	9.2	2.1	PHQ931_0060K513_0780 EZ501U	5760	–	8830	465.6	26071/56	3400	3000	5000	3.3	4.0	–	771	93

n_{2N} [rpm]	M_{2N} [Nm]	$M_{2,0}$ [Nm]	a_{th}	S	Type	M_{2acc} [Nm]	M_{2accHT} [Nm]	M_{2NOT} [Nm]	i	i_{exakt}	n_{1maxDB} EL1,2 [rpm]	n_{1maxDB} EL3,4,5,6 [rpm]	n_{1maxZB} [rpm]	J_1 [kgcm²]	$\Delta\varphi_2$ [arc min]	$\Delta\varphi_{2red}$ [arc min]	C_2 [Nm/ arcmin]	m [kg]
PHQ931K (n_{1N} = 3000 rpm, $M_{2acc,max}$ = 5760 Nm)																		
6.4	3162	3418	16	1.2	PHQ931_0060K513_0780 EZ502U	5760	–	8830	465.6	26071/56	3400	3000	5000	5.6	4.0	–	771	94
6.4	3162	3546	16	1.2	PHQ931_0060K513_0780 EZ701U	5760	–	8830	465.6	26071/56	3400	3000	5000	8.9	4.0	–	771	96
7.1	1659	1814	8.9	2.3	PHQ931_0060K513_0700 EZ501U	5670	–	7980	420.5	841/2	3400	3000	5000	3.4	4.0	–	771	93
7.1	2856	3087	15	1.3	PHQ931_0060K513_0700 EZ502U	5670	–	7980	420.5	841/2	3400	3000	5000	5.7	4.0	–	771	94
7.1	2856	3203	15	1.3	PHQ931_0060K513_0700 EZ701U	5670	–	7980	420.5	841/2	3400	3000	5000	9.0	4.0	–	771	96
7.1	3743	4284	20	1.0	PHQ931_0060K513_0700 EZ503U	5670	–	7980	420.5	841/2	3400	3000	5000	8.0	4.0	–	771	96
7.7	1528	1670	8.7	2.5	PHQ931_0060K513_0650 EZ501U	5690	–	7950	387.3	25172/65	3400	3000	5000	3.5	4.0	–	771	93
7.7	2630	2843	15	1.4	PHQ931_0060K513_0650 EZ502U	5760	–	7950	387.3	25172/65	3400	3000	5000	5.8	4.0	–	771	94
7.7	2630	2950	15	1.4	PHQ931_0060K513_0650 EZ701U	5760	–	11250	387.3	25172/65	3400	3000	5000	9.1	4.0	–	771	96
7.7	3448	3945	20	1.1	PHQ931_0060K513_0650 EZ503U	5760	–	7950	387.3	25172/65	3400	3000	5000	8.2	4.0	–	771	96
8.6	1380	1509	8.4	2.8	PHQ931_0060K513_0580 EZ501U	5140	–	7180	349.8	22736/65	3400	3000	5000	3.5	4.0	–	771	93
8.6	2376	2568	15	1.6	PHQ931_0060K513_0580 EZ502U	5300	–	7180	349.8	22736/65	3400	3000	5000	5.8	4.0	–	771	94
8.6	2376	2664	15	1.6	PHQ931_0060K513_0580 EZ701U	5760	–	11250	349.8	22736/65	3400	3000	5000	9.1	4.0	–	771	96
8.6	3114	3563	19	1.2	PHQ931_0060K513_0580 EZ503U	5300	–	7180	349.8	22736/65	3400	3000	5000	8.2	4.0	–	771	96
10	1140	1246	8.0	3.3	PHQ931_0060K513_0480 EZ501U	4240	–	6760	289.0	8091/28	3400	3000	5000	3.9	4.0	–	771	93
10	1962	2122	14	1.9	PHQ931_0060K513_0480 EZ502U	4990	–	6760	289.0	8091/28	3400	3000	5000	6.2	4.0	–	771	94
10	1962	2201	14	1.9	PHQ931_0060K513_0480 EZ701U	5300	–	11250	289.0	8091/28	3400	3000	5000	9.5	4.0	–	771	96
10	2572	2944	18	1.5	PHQ931_0060K513_0480 EZ503U	4990	–	6760	289.0	8091/28	3400	3000	5000	8.6	4.0	–	771	96
10	3182	3819	22	1.2	PHQ931_0060K513_0480 EZ702U	5760	–	11250	289.0	8091/28	3400	3000	5000	15	4.0	–	771	98
10	3580	4243	25	1.1	PHQ931_0060K513_0480 EZ505U	5760	–	11250	289.0	8091/28	3400	3000	5000	13	4.0	–	771	98
11	1030	1126	7.7	3.7	PHQ931_0060K513_0440 EZ501U	3830	–	6110	261.0	261/1	3400	3000	5000	4.0	4.0	–	771	93
11	1773	1916	13	2.1	PHQ931_0060K513_0440 EZ502U	4500	–	6110	261.0	261/1	3400	3000	5000	6.3	4.0	–	771	94
11	1773	1988	13	2.1	PHQ931_0060K513_0440 EZ701U	4790	–	11250	261.0	261/1	3400	3000	5000	9.6	4.0	–	771	96
11	2323	2659	17	1.6	PHQ931_0060K513_0440 EZ503U	4500	–	6110	261.0	261/1	3400	3000	5000	8.6	4.0	–	771	96
11	2874	3449	22	1.3	PHQ931_0060K513_0440 EZ702U	5760	–	11250	261.0	261/1	3400	3000	5000	15	4.0	–	771	98
11	3234	3833	24	1.2	PHQ931_0060K513_0440 EZ505U	5760	–	11250	261.0	261/1	3400	3000	5000	13	4.0	–	771	98
13	1570	1761	13	2.4	PHQ931_0060K513_0390 EZ701U	4240	–	11250	231.2	8091/35	3400	3000	5000	10	4.0	–	771	96
13	2546	3055	21	1.5	PHQ931_0060K513_0390 EZ702U	5760	–	11250	231.2	8091/35	3400	3000	5000	15	4.0	–	771	98
13	2864	3395	23	1.3	PHQ931_0060K513_0390 EZ505U	5760	–	11250	231.2	8091/35	3400	3000	5000	14	4.0	–	771	98
13	3501	4413	29	1.1	PHQ931_0060K513_0390 EZ703U	5760	–	11250	231.2	8091/35	3400	3000	5000	23	4.0	–	771	100
14	1418	1591	12	2.7	PHQ931_0060K513_0350 EZ701U	3830	–	11130	208.8	1044/5	3400	3000	5000	10	4.0	–	771	96
14	2300	2759	20	1.7	PHQ931_0060K513_0350 EZ702U	5760	–	11130	208.8	1044/5	3400	3000	5000	15	4.0	–	771	98
14	2587	3066	23	1.5	PHQ931_0060K513_0350 EZ505U	5760	–	11130	208.8	1044/5	3400	3000	5000	14	4.0	–	771	98
14	3162	3986	28	1.2	PHQ931_0060K513_0350 EZ703U	5760	–	11130	208.8	1044/5	3400	3000	5000	23	4.0	–	771	100
15	1317	1477	12	2.9	PHQ931_0060K513_0320 EZ701U	3560	–	11250	193.8	62031/320	3400	3000	5000	10	4.0	–	771	96
15	2135	2562	20	1.8	PHQ931_0060K513_0320 EZ702U	5760	–	11250	193.8	62031/320	3400	3000	5000	16	4.0	–	771	98
15	2402	2846	22	1.6	PHQ931_0060K513_0320 EZ505U	5760	–	11250	193.8	62031/320	3400	3000	5000	14	4.0	–	771	98
15	2935	3700	27	1.3	PHQ931_0060K513_0320 EZ703U	5760	–	11250	193.8	62031/320	3400	3000	5000	24	4.0	–	771	100
17	1189	1334	12	3.2	PHQ931_0060K513_0290 EZ701U	3210	–	10350	175.1	14007/80	3400	3000	5000	11	4.0	–	771	96
17	1928	2314	19	2.0	PHQ931_0060K513_0290 EZ702U	5760	–	10350	175.1	14007/80	3400	3000	5000	16	4.0	–	771	98
17	2169	2571	22	1.8	PHQ931_0060K513_0290 EZ505U	5760	–	10350	175.1	14007/80	3400	3000	5000	14	4.0	–	771	98
17	2651	3342	26	1.4	PHQ931_0060K513_0290 EZ703U	5760	–	10350	175.1	14007/80	3400	3000	5000	24	4.0	–	771	100
21	992	1113	11	3.8	PHQ931_0060K513_0240 EZ701U	2680	–	10140	146.1	11687/80	2800	2500	4200	11	4.0	–	771	96
21	1609	1931	18	2.4	PHQ931_0060K513_0240 EZ702U	5500	–	10140	146.1	11687/80	2800	2500	4200	17	4.0	–	771	98
21	1810	2145	20	2.1	PHQ931_0060K513_0240 EZ505U	5760	–	10140	146.1	11687/80	2800	2500	4200	15	4.0	–	771	98
21	2212	2789	25	1.7	PHQ931_0060K513_0240 EZ703U	5760	–	10140	146.1	11687/80	2800	2500	4200	25	4.0	–	771	100
21	2856	4049	32	1.3	PHQ931_0060K513_0240 EZ705U	5760	–	11250	146.1	11687/80	2800	2500	4200	37	4.0	–	771	106
23	896	1005	11	4.2	PHQ931_0060K513_0220 EZ701U	2420	–	9160	132.0	2639/20	2800	2500	4200	12	4.0	–	771	96
23	1453	1744	18	2.6	PHQ931_0060K513_0220 EZ702U	4970	–	9160	132.0	2639/20	2800	2500	4200	17	4.0	–	771	98
23	1635	1938	20	2.3	PHQ931_0060K513_0220 EZ505U	5760	–	9160	132.0	2639/20	2800	2500	4200	15	4.0	–	771	98
23	1998	2519	24	1.9	PHQ931_0060K513_0220 EZ703U	5760	–	9160	132.0	2639/20	2800	2500	4200	25	4.0	–	771	100
23	2579	3657	31	1.5	PHQ931_0060K513_0220 EZ705U	5760	–	11250	132.0	2639/20	2800	2500	4200	37	4.0	–	771	106
26	789	885	10	4.8	PHQ931_0060K513_0195 EZ701U	2130	–	8670	116.1	27869/240	2800	2500	4200	13	4.0	–	771	96
26	1279	1535	17	3.0	PHQ931_0060K513_0195 EZ702U	4370	–	8670	116.1	27869/240	2800	2500	4200	18	4.0	–	771	98
26	1439	1705	19	2.6	PHQ931_0060K513_0195 EZ505U	5760	–	8670	116.1	27869/240	2800	2500	4200	16	4.0	–	771	98
26	1758	2217	23	2.2	PHQ931_0060K513_0195 EZ703U	5760	–	8670	116.1	27869/240	2800	2500	4200	26	4.0	–	771	100
26	2270	3218	30	1.7	PHQ931_0060K513_0195 EZ705U	5760	–	11250	116.1	27869/240	2800	2500	4200	38	4.0	–	771	106
26	2376	3954	31	1.6	PHQ931_0060K513_0195 EZ802U	5760	–	11250	116.1	27869/240	2800	2500	4200	62	4.0	–	771	114
29	1155	1386	16	3.3	PHQ931_0060K513_0175 EZ702U	3950	–	7830	104.9	6293/60	2800	2500	4200	18	4.0	–	771	98
29	1300	1540	18	2.9	PHQ931_0060K513_0175 EZ505U	5760	–	7830	104.9	6293/60	2800	2500	4200	17	4.0	–	771	98
29	1588	2002	23	2.4	PHQ931_0060K513_0175 EZ703U	5760	–	7830	104.9	6293/60	2800	2500	4200	26	4.0	–	771	100
29	2050	2907	29	1.9	PHQ931_0060K513_0175 EZ705U	5760	–	11250	104.9	6293/60	2800	2500	4200	38	4.0	–	771	106
29	2147	3571	30	1.8	PHQ931_0060K513_0175 EZ802U	5760	–	11250	104.9	6293/60	2800	2500	4200	63	4.0	–	771	114
31	1063	1276	16	3.6	PHQ931_0060K513_0160 EZ702U	3630	–	7210	96.56	26071/270	2300	2200	3600	19	4.0	–	771	98

n_{2N} [rpm]	M_{2N} [Nm]	$M_{2,0}$ [Nm]	a_{th}	S	Type	M_{2acc} [Nm]	M_{2accHT} [Nm]	M_{2NOT} [Nm]	i	i_{exakt}	n_{1maxDB} EL1,2 [rpm]	n_{1maxDB} EL3,4,5,6 [rpm]	n_{1maxZB} [rpm]	J_1 [kgcm²]	$\Delta\varphi_2$ [arc min]	$\Delta\varphi_{2red}$ [arc min]	C_2 [Nm/ arcmin]	m [kg]
PHQ931K (n_{1N} = 3000 rpm, $M_{2acc,max}$ = 5760 Nm)																		
31	1196	1418	18	3.2	PHQ931_0060K513_0160 EZ505U	5320	–	7210	96.56	26071/270	2300	2200	3600	18	4.0	–	771	98
31	1462	1843	22	2.6	PHQ931_0060K513_0160 EZ703U	5320	–	7210	96.56	26071/270	2300	2200	3600	27	4.0	–	771	100
31	1888	2676	28	2.0	PHQ931_0060K513_0160 EZ705U	5760	–	11250	96.56	26071/270	2300	2200	3600	39	4.0	–	771	106
31	1976	3288	30	1.9	PHQ931_0060K513_0160 EZ802U	5760	–	11250	96.56	26071/270	2300	2200	3600	63	4.0	–	771	114
31	2357	4271	35	1.6	PHQ931_0060K513_0160 EZ803U	5760	–	11250	96.56	26071/270	2300	2200	3600	89	4.0	–	771	120
34	961	1153	16	4.0	PHQ931_0060K513_0145 EZ702U	3280	–	6510	87.22	11774/135	2300	2200	3600	20	4.0	–	771	98
34	1081	1281	17	3.5	PHQ931_0060K513_0145 EZ505U	4800	–	6510	87.22	11774/135	2300	2200	3600	18	4.0	–	771	98
34	1321	1665	21	2.9	PHQ931_0060K513_0145 EZ703U	4800	–	6510	87.22	11774/135	2300	2200	3600	28	4.0	–	771	100
34	1705	2417	28	2.2	PHQ931_0060K513_0145 EZ705U	5760	–	11250	87.22	11774/135	2300	2200	3600	40	4.0	–	771	106
34	1785	2970	29	2.1	PHQ931_0060K513_0145 EZ802U	5760	–	11250	87.22	11774/135	2300	2200	3600	64	4.0	–	771	114
34	2129	3858	34	1.8	PHQ931_0060K513_0145 EZ803U	5760	–	11250	87.22	11774/135	2300	2200	3600	89	4.0	–	771	120
39	1502	2130	27	2.5	PHQ931_0060K513_0130 EZ705U	5760	–	11250	76.85	1537/20	2300	2200	3600	42	4.0	–	771	106
39	1573	2617	28	2.4	PHQ931_0060K513_0130 EZ802U	5760	–	11250	76.85	1537/20	2300	2200	3600	66	4.0	–	771	114
39	1876	3399	33	2.0	PHQ931_0060K513_0130 EZ803U	5760	–	11250	76.85	1537/20	2300	2200	3600	91	4.0	–	771	120
43	1357	1924	26	2.7	PHQ931_0060K513_0115 EZ705U	5760	–	11250	69.41	10759/155	2300	2200	3600	42	4.0	–	771	106
43	1421	2363	28	2.6	PHQ931_0060K513_0115 EZ802U	5760	–	11250	69.41	10759/155	2300	2200	3600	66	4.0	–	771	114
43	1695	3071	33	2.2	PHQ931_0060K513_0115 EZ803U	5760	–	11250	69.41	10759/155	2300	2200	3600	92	4.0	–	771	120
49	1190	1688	27	3.0	PHQ931_0060K513_0100 EZ705U	5760	–	11250	60.90	609/10	1900	1800	3200	45	4.0	–	771	106
49	1246	2074	28	2.8	PHQ931_0060K513_0100 EZ802U	5590	–	11250	60.90	609/10	1900	1800	3200	69	4.0	–	771	114
49	1487	2694	33	2.4	PHQ931_0060K513_0100 EZ803U	5760	–	11250	60.90	609/10	1900	1800	3200	94	4.0	–	771	120
55	1075	1525	27	3.2	PHQ931_0060K513_0092 EZ705U	5250	–	10950	55.01	8526/155	1900	1800	3200	46	4.0	–	771	106
55	1126	1873	28	3.0	PHQ931_0060K513_0092 EZ802U	5050	–	10950	55.01	8526/155	1900	1800	3200	70	4.0	–	771	114
55	1343	2433	33	2.5	PHQ931_0060K513_0092 EZ803U	5760	–	10950	55.01	8526/155	1900	1800	3200	95	4.0	–	771	120
61	954	1353	27	3.4	PHQ931_0060K513_0081 EZ705U	4660	–	9720	48.80	17081/350	1900	1800	3200	49	4.0	–	771	106
61	999	1662	28	3.3	PHQ931_0060K513_0081 EZ802U	4480	–	9720	48.80	17081/350	1900	1800	3200	73	4.0	–	771	114
61	1191	2159	33	2.8	PHQ931_0060K513_0081 EZ803U	5760	–	9720	48.80	17081/350	1900	1800	3200	98	4.0	–	771	120
68	862	1222	27	3.7	PHQ931_0060K513_0073 EZ705U	4210	–	8780	44.08	1102/25	1900	1800	3200	51	4.0	–	771	106
68	902	1501	28	3.5	PHQ931_0060K513_0073 EZ802U	4050	–	8780	44.08	1102/25	1900	1800	3200	75	4.0	–	771	114
68	1076	1950	34	3.0	PHQ931_0060K513_0073 EZ803U	5760	–	8780	44.08	1102/25	1900	1800	3200	100	4.0	–	771	120
PHQ931K (n_{1N} = 4500 rpm, $M_{2acc,max}$ = 5760 Nm)																		
16	2519	4058	18	1.5	PHQ931_0060K513_0480 EZ505U	5760	–	11250	289.0	8091/28	3400	3000	5000	13	4.0	–	771	98
17	2276	3665	17	1.7	PHQ931_0060K513_0440 EZ505U	5760	–	11250	261.0	261/1	3400	3000	5000	13	4.0	–	771	98
19	2016	3246	16	1.9	PHQ931_0060K513_0390 EZ505U	5760	–	11250	231.2	8091/35	3400	3000	5000	14	4.0	–	771	98
19	2567	4243	21	1.5	PHQ931_0060K513_0390 EZ703U	5760	–	11250	231.2	8091/35	3400	3000	5000	23	4.0	–	771	100
22	1820	2932	16	2.1	PHQ931_0060K513_0350 EZ505U	5760	–	11130	208.8	1044/5	3400	3000	5000	14	4.0	–	771	98
22	2319	3833	20	1.6	PHQ931_0060K513_0350 EZ703U	5760	–	11130	208.8	1044/5	3400	3000	5000	23	4.0	–	771	100
23	1690	2722	16	2.2	PHQ931_0060K513_0320 EZ505U	5760	–	11250	193.8	62031/320	3400	3000	5000	14	4.0	–	771	98
23	2153	3558	20	1.8	PHQ931_0060K513_0320 EZ703U	5760	–	11250	193.8	62031/320	3400	3000	5000	24	4.0	–	771	100
26	1527	2459	15	2.5	PHQ931_0060K513_0290 EZ505U	5760	–	10350	175.1	14007/80	3400	3000	5000	14	4.0	–	771	98
26	1944	3214	19	2.0	PHQ931_0060K513_0290 EZ703U	5760	–	10350	175.1	14007/80	3400	3000	5000	24	4.0	–	771	100
PHQ1031K (n_{1N} = 2000 rpm, $M_{2acc,max}$ = 10000 Nm)																		
16	4869	7364	44	1.3	PHQ1031_0060K713_0200 EZ805U	10000	–	20000	121.4	357399/2944	2400	2200	3600	149	4.0	–	1561	193
18	4398	6652	42	1.5	PHQ1031_0060K713_0185 EZ805U	10000	–	20000	109.7	80703/736	2400	2200	3600	150	4.0	–	1561	193
20	3944	5965	41	1.6	PHQ1031_0060K713_0165 EZ805U	10000	–	20000	98.33	6293/64	2000	1900	3200	154	4.0	–	1561	193
23	3562	5388	40	1.8	PHQ1031_0060K713_0150 EZ805U	10000	–	20000	88.81	1421/16	2000	1900	3200	155	4.0	–	1561	193
26	3139	4747	38	2.1	PHQ1031_0060K713_0130 EZ805U	10000	–	20000	78.26	10017/128	2000	1900	3200	162	4.0	–	1561	193
28	2835	4288	37	2.3	PHQ1031_0060K713_0120 EZ805U	10000	–	20000	70.69	70119/992	2000	1900	3200	164	4.0	–	1561	193
33	2448	3702	36	2.7	PHQ1031_0060K713_0100 EZ805U	10000	–	20000	61.03	1953/32	1700	1600	2700	175	4.0	–	1561	193
36	2211	3344	35	2.9	PHQ1031_0060K713_0092 EZ805U	10000	–	20000	55.13	441/8	1700	1600	2700	178	4.0	–	1561	193
40	2015	3048	34	3.2	PHQ1031_0060K713_0084 EZ805U	9450	–	18760	50.24	263655/5248	1700	1600	2700	189	4.0	–	1561	193
44	1820	2753	33	3.6	PHQ1031_0060K713_0076 EZ805U	8540	–	16950	45.38	59535/1312	1700	1600	2700	193	4.0	–	1561	193
PHQ1031K (n_{1N} = 3000 rpm, $M_{2acc,max}$ = 10000 Nm)																		
5.1	4015	4504	12	1.6	PHQ1031_0060K713_0990 EZ701U	10000	–	20000	591.2	302715/512	2900	2600	4200	9.7	4.0	–	1561	156
5.6	3627	4068	12	1.8	PHQ1031_0060K713_0890 EZ701U	9800	–	18780	534.0	68355/128	2900	2600	4200	9.7	4.0	–	1561	156
5.6	5881	7058	19	1.1	PHQ1031_0060K713_0890 EZ702U	10000	–	18780	534.0	68355/128	2900	2600	4200	15	4.0	–	1561	158
6.3	3212	3603	11	2.0	PHQ1031_0060K713_0790 EZ701U	8680	–	19690	473.0	60543/128	2900	2600	4200	10	4.0	–	1561	156
6.3	5209	6251	18	1.2	PHQ1031_0060K713_0790 EZ702U	10000	–	19690	473.0	60543/128	2900	2600	4200	16	4.0	–	1561	158
7.0	2901	3254	11	2.2	PHQ1031_0060K713_0710 EZ701U	7840	–	17780	427.2	13671/32	2900	2600	4200	10	4.0	–	1561	156
7.0	4705	5646	18	1.4	PHQ1031_0060K713_0710 EZ702U	10000	–	17780	427.2	13671/32	2900	2600	4200	16	4.0	–	1561	158
7.7	2642	2964	11	2.5	PHQ1031_0060K713_0650 EZ701U	7140	–	17680	389.1	99603/256	2900	2600	4200	11	4.0	–	1561	156
7.7	4285	5142	17	1.5	PHQ1031_0060K713_0650 EZ702U	10000	–	17680	389.1	99603/256	2900	2600	4200	16	4.0	–	1561	158
7.7	5892	7427	23	1.1	PHQ1031_0060K713_0650 EZ703U	10000	–	17680	389.1	99603/256	2900	2600	4200	24	4.0	–	1561	160
8.5	2387	2677	10	2.7	PHQ1031_0060K713_0590 EZ701U	6450	–	15970	351.4	22491/64	2900	2600	4200	11	4.0	–	1561	156

n_{2N} [rpm]	M_{2N} [Nm]	$M_{2,0}$ [Nm]	a_{th}	S	Type	M_{2acc} [Nm]	M_{2accHT} [Nm]	M_{2NOT} [Nm]	i	i_{exakt}	n_{1maxDB} EL1,2 [rpm]	n_{1maxDB} EL3,4,5,6 [rpm]	n_{1maxZB} [rpm]	J_1 [kgcm²]	$\Delta\varphi_2$ [arc min]	$\Delta\varphi_{2red}$ [arc min]	C_2 [Nm/ arcmin]	m [kg]
PHQ1031K (n_{1N} = 3000 rpm, $M_{2acc,max}$ = 10000 Nm)																		
8.5	3870	4644	17	1.7	PHQ1031_0060K713_0590 EZ702U	10000	–	15970	351.4	22491/64	2900	2600	4200	16	4.0	–	1561	158
8.5	5322	6708	23	1.2	PHQ1031_0060K713_0590 EZ703U	10000	–	15970	351.4	22491/64	2900	2600	4200	24	4.0	–	1561	160
10	2033	2280	9.7	3.2	PHQ1031_0060K713_0500 EZ701U	5490	–	15140	299.3	498015/1664	2900	2600	4200	12	4.0	–	1561	156
10	3296	3955	16	2.0	PHQ1031_0060K713_0500 EZ702U	10000	–	15140	299.3	498015/1664	2900	2600	4200	18	4.0	–	1561	158
10	4532	5713	22	1.4	PHQ1031_0060K713_0500 EZ703U	10000	–	15140	299.3	498015/1664	2900	2600	4200	26	4.0	–	1561	160
11	1836	2059	9.4	3.5	PHQ1031_0060K713_0450 EZ701U	4960	–	13680	270.3	112455/416	2900	2600	4200	13	4.0	–	1561	156
11	2977	3573	15	2.2	PHQ1031_0060K713_0450 EZ702U	10000	–	13680	270.3	112455/416	2900	2600	4200	18	4.0	–	1561	158
11	4094	5160	21	1.6	PHQ1031_0060K713_0450 EZ703U	10000	–	13680	270.3	112455/416	2900	2600	4200	26	4.0	–	1561	160
11	5284	7492	27	1.2	PHQ1031_0060K713_0450 EZ705U	10000	–	20000	270.3	112455/416	2900	2600	4200	38	4.0	–	1561	166
13	1599	1793	9.0	4.1	PHQ1031_0060K713_0390 EZ701U	4320	–	14060	235.4	7533/32	2900	2600	4200	14	4.0	–	1561	156
13	2593	3111	15	2.5	PHQ1031_0060K713_0390 EZ702U	8860	–	14060	235.4	7533/32	2900	2600	4200	20	4.0	–	1561	158
13	3565	4494	20	1.8	PHQ1031_0060K713_0390 EZ703U	10000	–	14060	235.4	7533/32	2900	2600	4200	27	4.0	–	1561	160
13	4602	6525	26	1.4	PHQ1031_0060K713_0390 EZ705U	10000	–	20000	235.4	7533/32	2900	2600	4200	40	4.0	–	1561	166
14	1444	1620	8.8	4.5	PHQ1031_0060K713_0350 EZ701U	3900	–	12700	212.6	1701/8	2900	2600	4200	15	4.0	–	1561	156
14	2342	2810	14	2.8	PHQ1031_0060K713_0350 EZ702U	8000	–	12700	212.6	1701/8	2900	2600	4200	20	4.0	–	1561	158
14	3220	4059	20	2.0	PHQ1031_0060K713_0350 EZ703U	9360	–	12700	212.6	1701/8	2900	2600	4200	28	4.0	–	1561	160
14	4157	5893	25	1.6	PHQ1031_0060K713_0350 EZ705U	10000	–	20000	212.6	1701/8	2900	2600	4200	40	4.0	–	1561	166
14	4352	7240	26	1.5	PHQ1031_0060K713_0350 EZ802U	10000	–	20000	212.6	1701/8	2900	2600	4200	64	4.0	–	1561	174
15	3803	5392	25	1.7	PHQ1031_0060K713_0320 EZ705U	10000	–	20000	194.5	99603/512	2900	2600	4200	42	4.0	–	1561	166
15	3981	6624	26	1.6	PHQ1031_0060K713_0320 EZ802U	10000	–	20000	194.5	99603/512	2900	2600	4200	66	4.0	–	1561	174
17	3435	4870	24	1.9	PHQ1031_0060K713_0290 EZ705U	10000	–	20000	175.7	22491/128	2900	2600	4200	42	4.0	–	1561	166
17	3596	5983	25	1.8	PHQ1031_0060K713_0290 EZ802U	10000	–	20000	175.7	22491/128	2900	2600	4200	66	4.0	–	1561	174
20	2953	4187	23	2.2	PHQ1031_0060K713_0250 EZ705U	10000	–	20000	151.1	193347/1280	2400	2200	3600	46	4.0	–	1561	166
20	3091	5143	24	2.1	PHQ1031_0060K713_0250 EZ802U	10000	–	20000	151.1	193347/1280	2400	2200	3600	70	4.0	–	1561	174
20	3687	6682	28	1.8	PHQ1031_0060K713_0250 EZ803U	10000	–	20000	151.1	193347/1280	2400	2200	3600	95	4.0	–	1561	180
22	2667	3781	22	2.4	PHQ1031_0060K713_0230 EZ705U	10000	–	20000	136.4	43659/320	2400	2200	3600	46	4.0	–	1561	166
22	2792	4645	23	2.3	PHQ1031_0060K713_0230 EZ802U	10000	–	20000	136.4	43659/320	2400	2200	3600	70	4.0	–	1561	174
22	3331	6035	28	2.0	PHQ1031_0060K713_0230 EZ803U	10000	–	20000	136.4	43659/320	2400	2200	3600	96	4.0	–	1561	180
25	2373	3365	21	2.7	PHQ1031_0060K713_0200 EZ705U	10000	–	20000	121.4	357399/2944	2400	2200	3600	50	4.0	–	1561	166
25	2485	4133	22	2.6	PHQ1031_0060K713_0200 EZ802U	10000	–	20000	121.4	357399/2944	2400	2200	3600	74	4.0	–	1561	174
25	2964	5370	27	2.2	PHQ1031_0060K713_0200 EZ803U	10000	–	20000	121.4	357399/2944	2400	2200	3600	100	4.0	–	1561	180
27	2143	3039	21	3.0	PHQ1031_0060K713_0185 EZ705U	10000	–	20000	109.7	80703/736	2400	2200	3600	51	4.0	–	1561	166
27	2244	3733	22	2.9	PHQ1031_0060K713_0185 EZ802U	10000	–	20000	109.7	80703/736	2400	2200	3600	75	4.0	–	1561	174
27	2677	4850	26	2.4	PHQ1031_0060K713_0185 EZ803U	10000	–	20000	109.7	80703/736	2400	2200	3600	100	4.0	–	1561	180
31	1922	2725	20	3.4	PHQ1031_0060K713_0165 EZ705U	9390	–	19530	98.33	6293/64	2000	1900	3200	55	4.0	–	1561	166
31	2012	3348	21	3.2	PHQ1031_0060K713_0165 EZ802U	9020	–	19530	98.33	6293/64	2000	1900	3200	79	4.0	–	1561	174
31	2400	4350	25	2.7	PHQ1031_0060K713_0165 EZ803U	10000	–	20000	98.33	6293/64	2000	1900	3200	105	4.0	–	1561	180
34	1736	2462	19	3.7	PHQ1031_0060K713_0150 EZ705U	8480	–	17640	88.81	1421/16	2000	1900	3200	57	4.0	–	1561	166
34	1818	3024	20	3.6	PHQ1031_0060K713_0150 EZ802U	8150	–	17640	88.81	1421/16	2000	1900	3200	81	4.0	–	1561	174
34	2168	3929	24	3.0	PHQ1031_0060K713_0150 EZ803U	10000	–	20000	88.81	1421/16	2000	1900	3200	106	4.0	–	1561	180
38	1530	2169	19	4.2	PHQ1031_0060K713_0130 EZ705U	7470	–	15580	78.26	10017/128	2000	1900	3200	63	4.0	–	1561	166
38	1602	2665	20	4.1	PHQ1031_0060K713_0130 EZ802U	7180	–	15580	78.26	10017/128	2000	1900	3200	87	4.0	–	1561	174
38	1910	3462	23	3.4	PHQ1031_0060K713_0130 EZ803U	10000	–	20000	78.26	10017/128	2000	1900	3200	113	4.0	–	1561	180
42	1382	1959	18	4.7	PHQ1031_0060K713_0120 EZ705U	6750	–	14080	70.69	70119/992	2000	1900	3200	65	4.0	–	1561	166
42	1447	2407	19	4.5	PHQ1031_0060K713_0120 EZ802U	6490	–	14080	70.69	70119/992	2000	1900	3200	89	4.0	–	1561	174
42	1726	3127	23	3.8	PHQ1031_0060K713_0120 EZ803U	9410	–	20000	70.69	70119/992	2000	1900	3200	115	4.0	–	1561	180
PHQ1131K (n_{1N} = 2000 rpm, $M_{2acc,max}$ = 22000 Nm)																		
7.5	10648	16106	30	1.2	PHQ1131_0060K813_0440 EZ805U	22000	–	34110	265.5	531/2	2800	2500	4000	142	4.0	–	2623	334
8.3	9628	14563	29	1.4	PHQ1131_0060K813_0400 EZ805U	22000	–	44000	240.1	38409/160	2800	2500	4000	145	4.0	–	2623	334
9.2	8696	13154	28	1.5	PHQ1131_0060K813_0360 EZ805U	22000	–	44000	216.8	8673/40	2800	2500	4000	146	4.0	–	2623	334
10	7794	11789	27	1.7	PHQ1131_0060K813_0320 EZ805U	22000	–	44000	194.3	31093/160	2800	2500	4000	150	4.0	–	2623	334
11	7040	10648	26	1.8	PHQ1131_0060K813_0290 EZ805U	22000	–	44000	175.5	7021/40	2800	2500	4000	151	4.0	–	2623	334
13	6139	9286	25	2.1	PHQ1131_0060K813_0260 EZ805U	22000	–	44000	153.1	140833/920	2300	2100	3500	158	4.0	–	2623	334
14	5545	8388	25	2.3	PHQ1131_0060K813_0230 EZ805U	22000	–	44000	138.3	31801/230	2300	2100	3500	159	4.0	–	2623	334
17	4616	6982	23	2.8	PHQ1131_0060K813_0190 EZ805U	21650	–	42970	115.1	133517/1160	2300	2100	3500	171	4.0	–	2623	334
19	4170	6307	23	3.1	PHQ1131_0060K813_0175 EZ805U	19560	–	38800	104.0	30149/290	2300	2100	3500	173	4.0	–	2623	334
20	3954	5981	22	3.3	PHQ1131_0060K813_0165 EZ805U	18550	–	36800	98.59	126201/1280	1900	1800	3000	180	4.0	–	2623	334
22	3572	5402	22	3.6	PHQ1131_0060K813_0150 EZ805U	16750	–	33240	89.05	28497/320	1900	1800	3000	184	4.0	–	2623	334
PHQ1131K (n_{1N} = 3000 rpm, $M_{2acc,max}$ = 22000 Nm)																		
5.1	3959	4441	6.4	3.3	PHQ1131_0060K813_0970 EZ701U	10700	–	22810	583.0	93279/160	2800	2500	4000	11	4.0	–	2623	296
5.1	6421	7705	10	2.0	PHQ1131_0060K813_0970 EZ702U	16820	–	22810	583.0	93279/160	2800	2500	4000	16	4.0	–	2623	299
5.1	8828	11129	14	1.5	PHQ1131_0060K813_0970 EZ703U	16820	–	22810	583.0	93279/160	2800	2500	4000	24	4.0	–	2623	301
5.7	3576	4011	6.2	3.6	PHQ1131_0060K813_0880 EZ701U	9670	–	20600	526.6	21063/40	2800	2500	4000	11	4.0	–	2623	296
5.7	5799	6959	10	2.2	PHQ1131_0060K813_0880 EZ702U	15190	–	20600	526.6	21063/40	2800	2500	4000	17	4.0	–	2623	299

n_{2N} [rpm]	M_{2N} [Nm]	$M_{2,0}$ [Nm]	a_{th}	S	Type	M_{2acc} [Nm]	M_{2accHT} [Nm]	M_{2NOT} [Nm]	i	i_{exakt}	n_{1maxDB} EL1,2 [rpm]	n_{1maxDB} EL3,4,5,6 [rpm]	n_{1maxZB} [rpm]	J_1 [kgcm²]	$\Delta\varphi_2$ [arc min]	$\Delta\varphi_{2red}$ [arc min]	C_2 [Nm/ arcmin]	m [kg]
PHQ1131K (n_{1N} = 3000 rpm, $M_{2acc,max}$ = 22000 Nm)																		
5.7	7974	10052	14	1.6	PHQ1131_0060K813_0880 EZ703U	15190	–	20600	526.6	21063/40	2800	2500	4000	24	4.0	–	2623	301
6.3	3235	3628	6.1	4.0	PHQ1131_0060K813_0790 EZ701U	8740	–	20570	476.3	45725/96	2800	2500	4000	12	4.0	–	2623	296
6.3	5246	6295	9.8	2.5	PHQ1131_0060K813_0790 EZ702U	15160	–	20570	476.3	45725/96	2800	2500	4000	18	4.0	–	2623	299
6.3	7213	9092	14	1.8	PHQ1131_0060K813_0790 EZ703U	15160	–	20570	476.3	45725/96	2800	2500	4000	25	4.0	–	2623	301
6.3	9311	13201	17	1.4	PHQ1131_0060K813_0790 EZ705U	22000	–	44000	476.3	45725/96	2800	2500	4000	38	4.0	–	2623	306
6.3	9748	16218	18	1.3	PHQ1131_0060K813_0790 EZ802U	22000	–	44000	476.3	45725/96	2800	2500	4000	62	4.0	–	2623	314
7.0	2922	3277	5.9	4.4	PHQ1131_0060K813_0720 EZ701U	7900	–	18580	430.2	10325/24	2800	2500	4000	13	4.0	–	2623	296
7.0	4738	5685	9.5	2.7	PHQ1131_0060K813_0720 EZ702U	13700	–	18580	430.2	10325/24	2800	2500	4000	18	4.0	–	2623	299
7.0	6515	8212	13	2.0	PHQ1131_0060K813_0720 EZ703U	13700	–	18580	430.2	10325/24	2800	2500	4000	26	4.0	–	2623	301
7.0	8410	11924	17	1.5	PHQ1131_0060K813_0720 EZ705U	22000	–	43790	430.2	10325/24	2800	2500	4000	38	4.0	–	2623	306
7.0	8805	14648	18	1.5	PHQ1131_0060K813_0720 EZ802U	22000	–	43790	430.2	10325/24	2800	2500	4000	62	4.0	–	2623	314
7.6	7672	10878	16	1.7	PHQ1131_0060K813_0650 EZ705U	22000	–	44000	392.5	188387/480	2800	2500	4000	39	4.0	–	2623	306
7.6	8032	13363	17	1.6	PHQ1131_0060K813_0650 EZ802U	22000	–	44000	392.5	188387/480	2800	2500	4000	64	4.0	–	2623	314
8.5	6930	9825	16	1.9	PHQ1131_0060K813_0590 EZ705U	22000	–	39920	354.5	42539/120	2800	2500	4000	40	4.0	–	2623	306
8.5	7255	12070	17	1.8	PHQ1131_0060K813_0590 EZ802U	22000	–	39920	354.5	42539/120	2800	2500	4000	64	4.0	–	2623	314
8.5	8654	15681	20	1.5	PHQ1131_0060K813_0590 EZ803U	22000	–	39920	354.5	42539/120	2800	2500	4000	89	4.0	–	2623	320
10	3237	3885	8.9	3.8	PHQ1131_0060K813_0490 EZ702U	11060	–	16840	293.9	16461/56	2800	2500	4000	23	4.0	–	2623	299
10	4451	5611	12	2.8	PHQ1131_0060K813_0490 EZ703U	12410	–	16840	293.9	16461/56	2800	2500	4000	30	4.0	–	2623	301
10	5746	8147	15	2.3	PHQ1131_0060K813_0490 EZ705U	22000	–	37770	293.9	16461/56	2800	2500	4000	43	4.0	–	2623	306
10	6016	10009	16	2.2	PHQ1131_0060K813_0490 EZ802U	22000	–	37770	293.9	16461/56	2800	2500	4000	67	4.0	–	2623	314
10	7176	13003	19	1.8	PHQ1131_0060K813_0490 EZ803U	22000	–	37770	293.9	16461/56	2800	2500	4000	92	4.0	–	2623	320
11	2924	3509	9.6	3.8	PHQ1131_0060K813_0440 EZ702U	9990	–	15210	265.5	531/2	2800	2500	4000	23	4.0	–	2623	299
11	4020	5068	13	2.8	PHQ1131_0060K813_0440 EZ703U	11210	–	15210	265.5	531/2	2800	2500	4000	31	4.0	–	2623	301
11	5190	7359	15	2.5	PHQ1131_0060K813_0440 EZ705U	22000	–	34110	265.5	531/2	2800	2500	4000	43	4.0	–	2623	306
11	5434	9040	15	2.4	PHQ1131_0060K813_0440 EZ802U	22000	–	34110	265.5	531/2	2800	2500	4000	67	4.0	–	2623	314
11	6481	11745	18	2.0	PHQ1131_0060K813_0440 EZ803U	22000	–	34110	265.5	531/2	2800	2500	4000	93	4.0	–	2623	320
12	4693	6653	14	2.8	PHQ1131_0060K813_0400 EZ705U	22000	–	33610	240.1	38409/160	2800	2500	4000	46	4.0	–	2623	306
12	4913	8174	15	2.6	PHQ1131_0060K813_0400 EZ802U	22000	–	33610	240.1	38409/160	2800	2500	4000	70	4.0	–	2623	314
12	5860	10619	18	2.2	PHQ1131_0060K813_0400 EZ803U	22000	–	44000	240.1	38409/160	2800	2500	4000	96	4.0	–	2623	320
14	4239	6010	14	3.1	PHQ1131_0060K813_0360 EZ705U	20700	–	30350	216.8	8673/40	2800	2500	4000	47	4.0	–	2623	306
14	4438	7383	14	2.9	PHQ1131_0060K813_0360 EZ802U	19900	–	30350	216.8	8673/40	2800	2500	4000	71	4.0	–	2623	314
14	5293	9592	17	2.5	PHQ1131_0060K813_0360 EZ803U	22000	–	44000	216.8	8673/40	2800	2500	4000	96	4.0	–	2623	320
15	3799	5386	13	3.4	PHQ1131_0060K813_0320 EZ705U	18550	–	32420	194.3	31093/160	2800	2500	4000	51	4.0	–	2623	306
15	3977	6617	14	3.3	PHQ1131_0060K813_0320 EZ802U	17840	–	32420	194.3	31093/160	2800	2500	4000	75	4.0	–	2623	314
15	4744	8597	17	2.7	PHQ1131_0060K813_0320 EZ803U	22000	–	44000	194.3	31093/160	2800	2500	4000	101	4.0	–	2623	320
17	3431	4865	13	3.8	PHQ1131_0060K813_0290 EZ705U	16750	–	29280	175.5	7021/40	2800	2500	4000	52	4.0	–	2623	306
17	3592	5976	14	3.6	PHQ1131_0060K813_0290 EZ802U	16110	–	29280	175.5	7021/40	2800	2500	4000	76	4.0	–	2623	314
17	4285	7764	16	3.0	PHQ1131_0060K813_0290 EZ803U	22000	–	44000	175.5	7021/40	2800	2500	4000	102	4.0	–	2623	320
20	2992	4243	12	4.3	PHQ1131_0060K813_0260 EZ705U	14610	–	27100	153.1	140833/920	2300	2100	3500	59	4.0	–	2623	306
20	3133	5212	13	4.2	PHQ1131_0060K813_0260 EZ802U	14050	–	27100	153.1	140833/920	2300	2100	3500	83	4.0	–	2623	314
20	3737	6772	15	3.5	PHQ1131_0060K813_0260 EZ803U	20370	–	44000	153.1	140833/920	2300	2100	3500	109	4.0	–	2623	320
22	2703	3832	12	4.8	PHQ1131_0060K813_0230 EZ705U	13200	–	24480	138.3	31801/230	2300	2100	3500	61	4.0	–	2623	306
22	2830	4708	13	4.6	PHQ1131_0060K813_0230 EZ802U	12690	–	24480	138.3	31801/230	2300	2100	3500	85	4.0	–	2623	314
22	3375	6116	15	3.9	PHQ1131_0060K813_0230 EZ803U	18400	–	44000	138.3	31801/230	2300	2100	3500	110	4.0	–	2623	320
26	2810	5091	14	4.6	PHQ1131_0060K813_0190 EZ803U	15320	–	42970	115.1	133517/1160	2300	2100	3500	122	4.0	–	2623	320
PHQ1231K (n_{1N} = 2000 rpm, $M_{2acc,max}$ = 43000 Nm)																		
4.4	18049	27300	20	1.4	PHQ1231_0060K913_0750 EZ805U	39280	–	53280	450.0	187209/416	2600	2500	3800	142	4.0	–	4665	580
5.3	15177	22957	19	1.6	PHQ1231_0060K913_0630 EZ805U	43000	–	80000	378.4	629703/1664	2600	2500	3800	146	4.0	–	4665	580
6.8	11776	17812	17	2.1	PHQ1231_0060K913_0490 EZ805U	43000	–	80000	293.6	300669/1024	2600	2500	3800	153	4.0	–	4665	580
8.8	9154	13847	16	2.7	PHQ1231_0060K913_0380 EZ805U	42940	–	78150	228.3	584319/2560	2600	2500	3800	163	4.0	–	4665	580
10	7728	11690	15	3.2	PHQ1231_0060K913_0320 EZ805U	36250	–	71940	192.7	141825/736	2600	2500	3800	173	4.0	–	4665	580
14	5762	8715	14	4.3	PHQ1231_0060K913_0240 EZ805U	27030	–	53630	143.7	266631/1856	2200	2100	3300	195	4.0	–	4665	580
PHQ1231K (n_{1N} = 3000 rpm, $M_{2acc,max}$ = 43000 Nm)																		
1.3	14989	16812	5.3	1.7	PHQ1231_0060K914_3740 EZ701U	37150	–	57580	2242	13775935/6144	2600	2500	3800	9.4	4.0	–	4665	555
1.7	11783	13216	4.9	2.1	PHQ1231_0060K914_2940 EZ701U	31840	–	53280	1763	2932941/1664	2600	2500	3800	9.6	4.0	–	4665	555
1.7	19107	22928	8.0	1.3	PHQ1231_0060K914_2940 EZ702U	39280	–	53280	1763	2932941/1664	2600	2500	3800	15	4.0	–	4665	558
2.0	9908	11113	4.7	2.5	PHQ1231_0060K914_2470 EZ701U	26780	–	44780	1482	9865347/6656	2600	2500	3800	9.9	4.0	–	4665	555
2.0	16067	19281	7.6	1.6	PHQ1231_0060K914_2470 EZ702U	33010	–	44780	1482	9865347/6656	2600	2500	3800	15	4.0	–	4665	558
2.6	7688	8623	4.6	3.1	PHQ1231_0060K914_1920 EZ701U	20780	–	39630	1150	4710481/4096	2600	2500	3800	10	4.0	–	4665	555
2.6	12467	14960	7.4	1.9	PHQ1231_0060K914_1920 EZ702U	29220	–	39630	1150	4710481/4096	2600	2500	3800	16	4.0	–	4665	558
2.6	17142	21609	10	1.4	PHQ1231_0060K914_1920 EZ703U	29220	–	39630	1150	4710481/4096	2600	2500	3800	23	4.0	–	4665	560
3.4	5976	6703	4.5	3.8	PHQ1231_0060K914_1490 EZ701U	16150	–	35940	894.0	9154331/10240	2600	2500	3800	11	4.0	–	4665	555
3.4	9691	11629	7.3	2.3	PHQ1231_0060K914_1490 EZ702U	26500	–	35940	894.0	9154331/10240	2600	2500	3800	16	4.0	–	4665	558
3.4	13325	16798	10	1.7	PHQ1231_0060K914_1490 EZ703U	26500	–	35940	894.0	9154331/10240	2600	2500	3800	24	4.0	–	4665	560

n_{2N} [rpm]	M_{2N} [Nm]	$M_{2,0}$ [Nm]	a_{th}	S	Type	M_{2acc} [Nm]	M_{2accHT} [Nm]	M_{2NOT} [Nm]	i	i_{exakt}	n_{1maxDB} EL1,2 [rpm]	n_{1maxDB} EL3,4,5,6 [rpm]	n_{1maxZB} [rpm]	J_1 [kgcm²]	$\Delta\varphi_2$ [arc min]	$\Delta\varphi_{2red}$ [arc min]	C_2 [Nm/ arcmin]	m [kg]
PHQ1231K (n_{1N} = 3000 rpm, $M_{2acc,max}$ = 43000 Nm)																		
3.4	17735	29506	12	1.4	PHQ1231_0060K914_1470 EZ802U	43000	–	78150	880.4	15776613/17920	2600	2500	3800	62	4.0	–	4665	574
4.0	5045	5659	4.4	4.3	PHQ1231_0060K914_1260 EZ701U	13640	–	30460	754.7	2221925/2944	2600	2500	3800	12	4.0	–	4665	555
4.0	8181	9818	7.2	2.6	PHQ1231_0060K914_1260 EZ702U	22460	–	30460	754.7	2221925/2944	2600	2500	3800	17	4.0	–	4665	558
4.0	11250	14181	9.9	1.9	PHQ1231_0060K914_1260 EZ703U	22460	–	30460	754.7	2221925/2944	2600	2500	3800	25	4.0	–	4665	560
4.0	14973	24910	11	1.7	PHQ1231_0060K914_1240 EZ802U	43000	–	71940	743.3	3829275/5152	2600	2500	3800	62	4.0	–	4665	574
4.0	17860	32363	14	1.4	PHQ1231_0060K914_1240 EZ803U	43000	–	71940	743.3	3829275/5152	2600	2500	3800	88	4.0	–	4665	580
5.2	11716	19492	11	2.1	PHQ1231_0060K913_0950 EZ802U	37150	–	57580	572.5	293105/512	2600	2500	3800	64	4.0	–	4665	561
5.2	13975	25324	13	1.8	PHQ1231_0060K913_0950 EZ803U	37150	–	57580	572.5	293105/512	2600	2500	3800	90	4.0	–	4665	567
5.3	6099	7319	8.6	2.7	PHQ1231_0060K914_0940 EZ702U	16740	–	22710	562.7	4177219/7424	2600	2500	3800	18	4.0	–	4665	558
5.3	8387	10572	12	2.0	PHQ1231_0060K914_0940 EZ703U	16740	–	22710	562.7	4177219/7424	2600	2500	3800	26	4.0	–	4665	560
5.4	11163	18571	11	2.2	PHQ1231_0060K914_0920 EZ802U	39540	–	53630	554.1	7199037/12992	2600	2500	3800	64	4.0	–	4665	574
5.4	13315	24127	13	1.9	PHQ1231_0060K914_0920 EZ803U	39540	–	53630	554.1	7199037/12992	2600	2500	3800	89	4.0	–	4665	580
6.7	9210	15323	10	2.7	PHQ1231_0060K913_0750 EZ802U	39280	–	53280	450.0	187209/416	2600	2500	3800	68	4.0	–	4665	561
6.7	10986	19907	12	2.3	PHQ1231_0060K913_0750 EZ803U	39280	–	53280	450.0	187209/416	2600	2500	3800	93	4.0	–	4665	567
7.9	7745	12885	9.5	3.2	PHQ1231_0060K913_0630 EZ802U	33010	–	44780	378.4	629703/1664	2600	2500	3800	71	4.0	–	4665	561
7.9	9238	16740	11	2.7	PHQ1231_0060K913_0630 EZ803U	43000	–	80000	378.4	629703/1664	2600	2500	3800	97	4.0	–	4665	567
10	6009	9998	8.8	4.2	PHQ1231_0060K913_0490 EZ802U	26950	–	39630	293.6	300669/1024	2600	2500	3800	78	4.0	–	4665	561
10	7168	12989	11	3.5	PHQ1231_0060K913_0490 EZ803U	39070	–	80000	293.6	300669/1024	2600	2500	3800	104	4.0	–	4665	567
13	5572	10097	9.8	4.5	PHQ1231_0060K913_0380 EZ803U	30370	–	78150	228.3	584319/2560	2600	2500	3800	114	4.0	–	4665	567

14.3 Dimensional drawings

In this chapter you can find the dimensions of the geared motors.

There is a dimensional drawing for every possible shaft/housing design, each with the tables for gear unit dimensions, motor dimensions and geared motor dimensions.

Dimensions can exceed the specifications of ISO 2768-mK due to casting tolerances or accumulation of individual tolerances.

We reserve the right to make dimensional changes due to ongoing technical development.

You can download 3D models of our standard drives at http://configurator.stoeber.de.

Combination options and the dimensions of forced ventilated geared motors can also be found at http://configurator.stoeber.de.

14.3.1 PHQ5 – PHQ10 F shaft design (flange shaft)

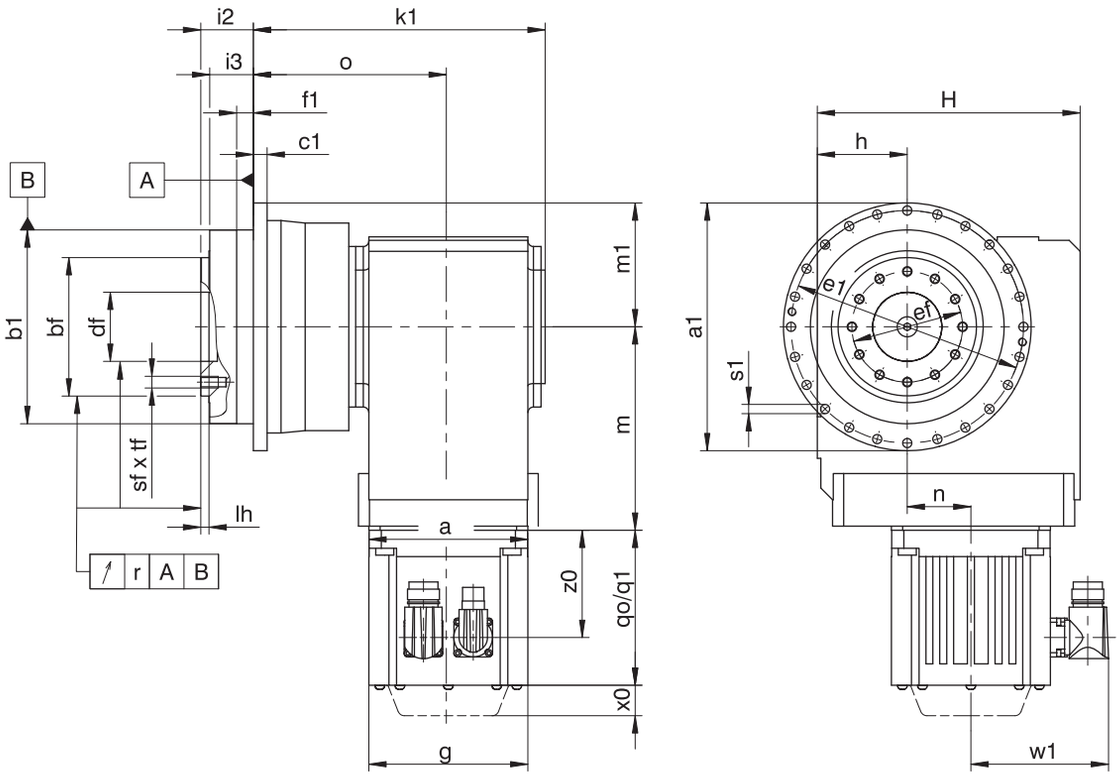

PHQ5

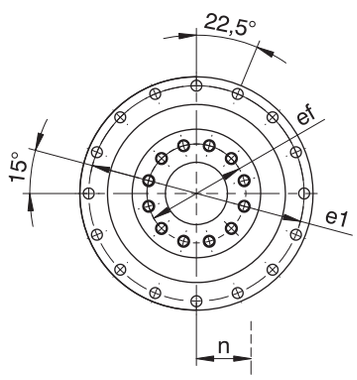

PHQ7/PHQ8

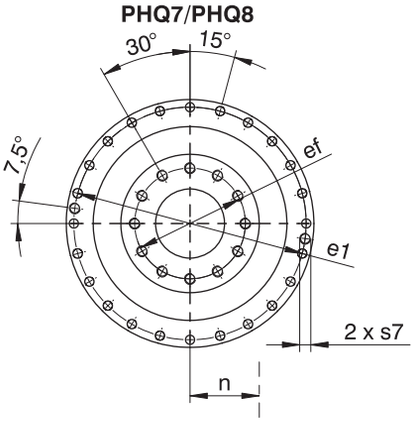

PHQ9

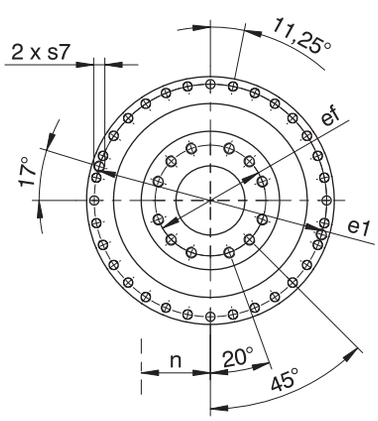

PHQ10

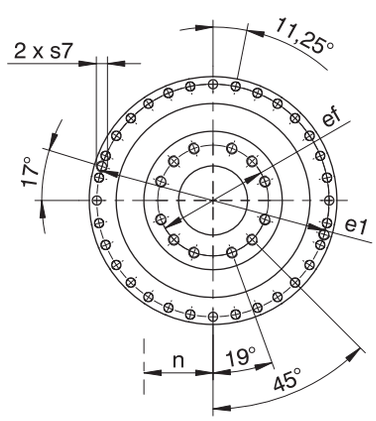

q0	Applies to motors without brake.	q1	Applies to motors with brake.
x0	Applies to encoders using an optical measuring method.	w1	Different for the One Cable Solution (OCS), see the chapter [▶ 17.4]

Dimensions of gear units

Type	Øa1	Øb1	Øbf	c1	Ødf	Øe1	Øef	f1	i2	i3	k1	lh	m1	o	r	Øs1	s7	sf	tf
PHQ531_K102_	145_{h7}	110_{h7}	80_{h7}	8	40^{H6}	135	63	10	29	23	180.0	6	72.5	124.0	0.020	5.5	–	M8	11.0
PHQ731_K202_	179_{h7}	140_{h7}	100_{h7}	10	50^{H6}	168	80	12	38	32	216.0	6	89.5	146.0	0.025	6.6	–	M10	16.0
PHQ831_K402_	247_{h7}	200_{h7}	160_{h7}	12	80^{H6}	233	125	15	50	42	289.0	8	123.5	199.0	0.030	9.0	M10	M12	17.0
PHQ931_K513_	300_{h7}	255_{h7}	180_{h7}	18	90^{H6}	280	145	20	66	55	292.5	12	150.0	196.5	0.030	13.5	M8	M20	28.0
PHQ1031_K713_	330_{h7}	285_{h7}	200_{h7}	20	95^{H6}	310	166	20	75	60	344.5	10	165.0	228.0	0.040	13.5	M10	M24	35.0

Dimensions of motors

Type	□g	q0	q1	w1	x0	z0
EZ301U	72	114.0	154.0	55.5	21	78.5
EZ302U	72	136.0	176.0	55.5	21	100.5
EZ303U	72	158.0	198.0	55.5	21	122.5
EZ401U	98	118.5	167.0	91.0	22	76.5
EZ402U	98	143.5	192.0	91.0	22	101.5
EZ404U	98	193.5	242.0	91.0	22	151.5
EZ501U	115	112.0	166.5	100.0	22	77.5
EZ502U	115	137.0	191.5	100.0	22	102.5
EZ503U	115	162.0	216.5	100.0	22	127.5
EZ505U	115	212.0	266.5	100.0	22	177.5
EZ701U	145	125.0	184.0	115.0	22	87.0
EZ702U	145	150.0	209.0	115.0	22	112.0
EZ703U	145	175.0	234.0	115.0	22	137.0
EZ705U	145	230.0	289.0	134.0	22	188.0
EZ802U	190	232.5	309.5	156.5	22	178.5
EZ803U	190	273.5	350.5	156.5	22	219.5
EZ805U	190	355.5	432.5	156.5	22	301.5

Dimensions of geared motors

Type	EZ3			EZ4			EZ5			EZ7			EZ8		
	a	m	n	a	m	n	a	m	n	a	m	n	a	m	n
PHQ531_K102_	□72	124	36.0	□98	124	36.0	□115	128	36.0	□145	130	36.0	–	–	–
PHQ731_K202_	□72	143	46.0	□98	143	46.0	□115	147	46.0	□145	149	46.0	–	–	–
PHQ831_K402_	–	–	–	–	–	–	∅160	187	60.0	□145	189	60.0	□190	192	60.0
PHQ931_K513_	–	–	–	–	–	–	∅160	172	15.0	□145	174	15.0	□190	177	15.0
PHQ1031_K713_	–	–	–	–	–	–	–	–	–	∅200	221	20.0	□190	224	20.0

14.3.2 PHQ11 – PHQ12 F shaft design (flange shaft)

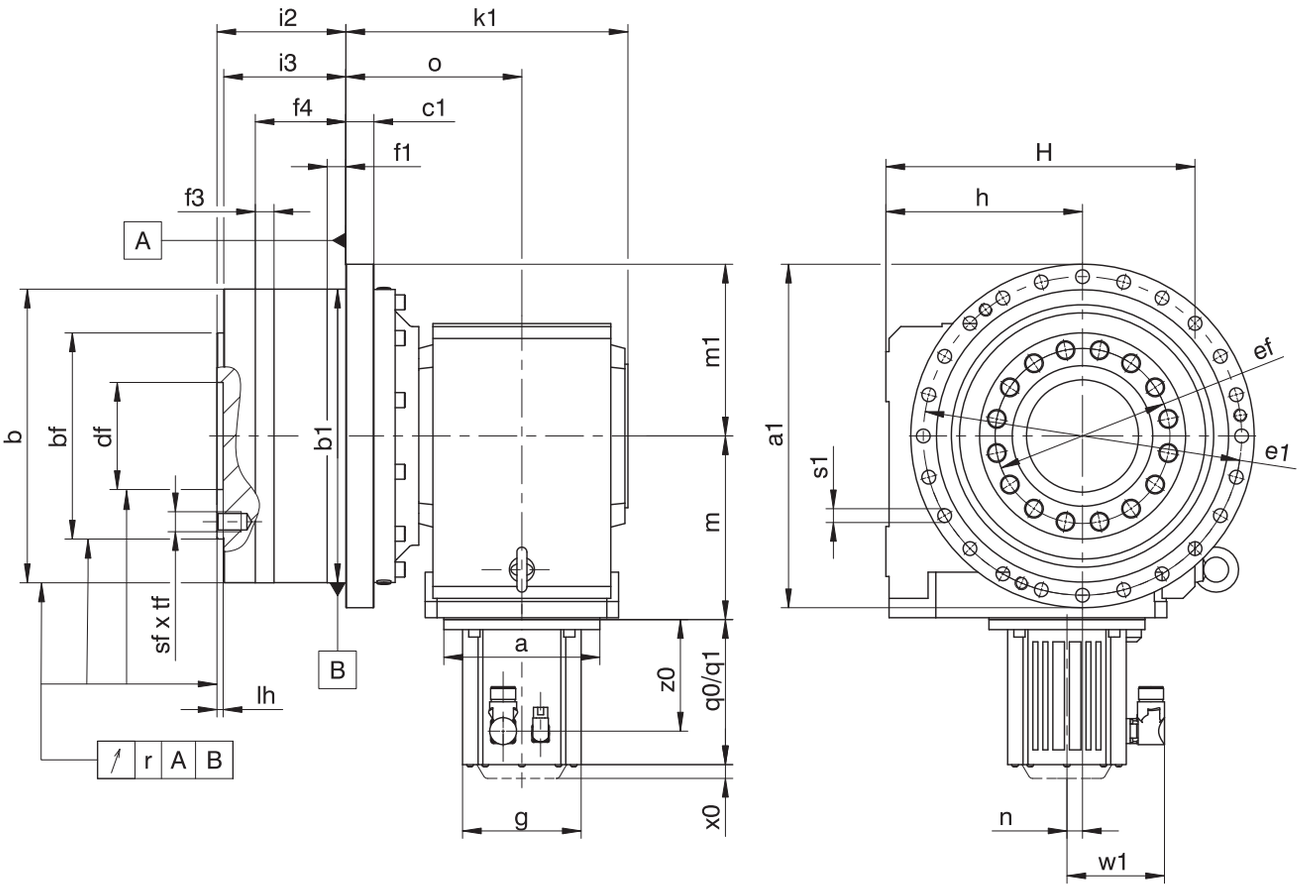

PHQ11

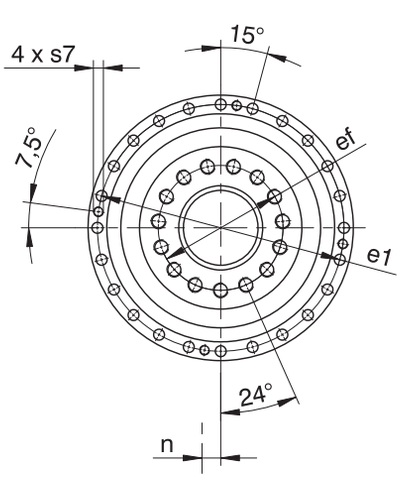

PHQ12

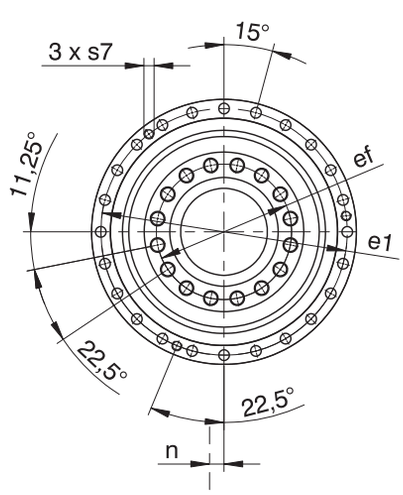

q0	Applies to motors without brake.	q1	Applies to motors with brake.
x0	Applies to encoders using an optical measuring method.	w1	Different for the One Cable Solution (OCS), see the chapter [▸ 17.4]

Dimensions of gear units

Type	Øa1	Øb	Øb1	Øbf	c1	Ødf	Øe1	Øef	f1	f3	f4	i2	i3	k1	lh	m1	o	r	Øs1	s7	sf	tf
PHQ1131_K813_	425	365_{g6}	365_{h6}	260_{h7}	32	120^{H6}	395	200	30	30	120	190	180	381.5	10	212.5	236.5	0.040	17.5	M16	M24	35.5
PHQ1231_K913_	550	470_{g6}	470_{h6}	330_{h7}	45	180^{H7}	510	280	30	30	145	206.5	195.5	452.0	10	275.0	282.0	0.040	22.0	M16	M30	48.0
PHQ1231_K914_	550	470_{g6}	470_{h6}	330_{h7}	45	180^{H7}	510	280	30	30	145	206.5	195.5	452.0	10	275.0	282.0	0.040	22.0	M16	M30	48.0

Dimensions of motors

Type	□g	q0	q1	w1	x0	z0
EZ701U	145	125.0	184.0	115.0	22	87.0
EZ702U	145	150.0	209.0	115.0	22	112.0
EZ703U	145	175.0	234.0	115.0	22	137.0
EZ705U	145	230.0	289.0	134.0	22	188.0
EZ802U	190	232.5	309.5	156.5	22	178.5
EZ803U	190	273.5	350.5	156.5	22	219.5
EZ805U	190	355.5	432.5	156.5	22	301.5

Dimensions of geared motors

Type	EZ7			EZ8		
	a	m	n	a	m	n
PHQ1131_K813_	∅200	247	24	∅250	249	24
PHQ1231_K913_	–	–	–	∅250	294	25
PHQ1231_K914_	∅200	353	25	∅250	365	25

14.4 Type designation

14.4.1 Type designation PHQ5K_ – PHQ8K_

In this chapter, you can find an explanation of the type designation with the associated options.

Additional ordering information not included in the type designation can be found at the end of the chapter.

Example code

PHQ	**7**	**3**	**1**	**S**	**F**	**S**	**S**	**0055**	**K202VF**	**0115**	**EZ401U**

Explanation

Code	Designation	Design
PHQ	Type	Planetary gear unit
7	Size	7 (example)
3	Generation	Generation 3
1	Stages	Single-stage
S	Housing	Standard
F	Shaft	Flange shaft
S V	Bearing	Standard bearing Reinforced bearing (PHQ4 – PHQ5)
S R	Backlash	Standard Reduced
0055	Transmission ratio of output (i x 10)	i = 5.5 (example)
K202VF	Input	K2 right-angle geared motor (example)
0115	Transmission ratio of input (i x 10 rounded)	i = 11.57 (example)
EZ401U	Motor	EZ synchronous servo motor

To complete the type designation, also specify the following in your order:

- For a detailed type designation of the motor, see the chapter [▸ 17]
- For the mounting position, see the chapter [▸ 14.5.3]
- Output gear unit side 3 or 4, see the chapter [▸ 14.5.3]
- Radial shaft seal rings at the output made of NBR or FKM (option), see the chapter [▸ 14.6.3]
- Position of the plug connectors, see the chapter [▸ 14.5.5]
- Reverse operation of the output shaft from ±20° to ±90° and horizontal installation, note the chapter [▸ 14.6.4]

14.4.2 Type designation PHQ9K_ – PHQ12K_

In this chapter, you can find an explanation of the type designation with the associated options.

Additional ordering information not included in the type designation can be found at the end of the chapter.

Example code

PHQ	9	3	1	F	0060	K513VF	0115	EZ802U

Explanation

Code	Designation	Design
PHQ	Type	Planetary gear unit
9	Size	9 (example)
3	Generation	Generation 3
1	Stages	Single-stage
F	Shaft	Flange shaft
0060	Transmission ratio of output (i x 10)	i = 6 (example)
K513VF	Input	K5 right-angle gear unit (example)
0115	Transmission ratio of input (i x 10 rounded)	i = 11.55 (example)
EZ802U	Motor	EZ synchronous servo motor

To complete the type designation, also specify the following in your order:

- For a detailed type designation of the motor, see the chapter [▸ 17]
- For the mounting position, see the chapter [▸ 14.5.3]
- Output gear unit side 3 or 4, see the chapter [▸ 14.5.3]
- Radial shaft seal rings at the output made of NBR or FKM (option), see the chapter [▸ 14.6.3]
- Position of the plug connectors, see the chapter [▸ 14.5.5]
- Reverse operation of the output shaft from ±20° to ±90° and horizontal installation, note the chapter [▸ 14.6.4]

14.4.3 Nameplate

An example gear unit nameplate is explained in the figure below.

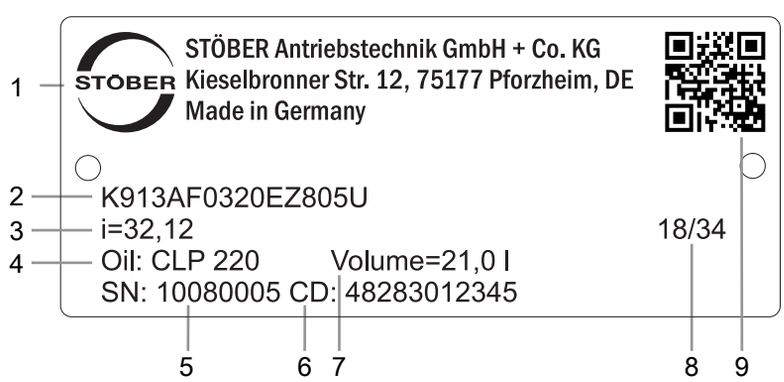

Code	Designation
1	Name of manufacturer
2	Type designation
3	Gear ratio of the gear unit
4	Lubricant specification
5	Serial number of the gear unit
6	Customer-specific data
7	Lubricant fill volume
8	Date of manufacture (year/calendar week)
9	QR code (link to product information)

14.4.3.1 Supporting documents

You can view or download supporting documents for the product by reading off the serial number on the nameplate of the product and entering it at the following address online:
https://id.stober.com

Alternatively, you can use a suitable mobile device to scan in the QR code on the nameplate of the product in order to be linked to the supporting documents.

14.5 Product description

14.5.1 Input options

EZ synchronous servo motor

http://www.stoeber.de/en/PHQKEZ

14.5.2 Installation conditions

The torque and force values listed in this catalog are valid under the following conditions:

- When the flange shaft and gear housing are fastened on the machine side using screws of strength class 12.9
- When the gear housings are adjusted at pilot øb1, and also at pilot Øb for sizes PHQ11 and PHQ12. The machine-side fit must be H7.
- When the flange shaft is adjusted using the connecting element at pilot øbf or ødf

14.5.3 Mounting positions

The following table shows the standard mounting positions.

The numbers identify the gear unit sides. The mounting position is defined by the gear side facing downwards.

EL1	EL2	EL3
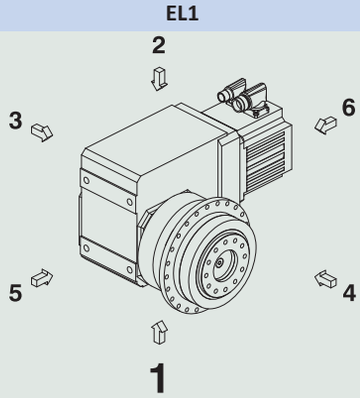	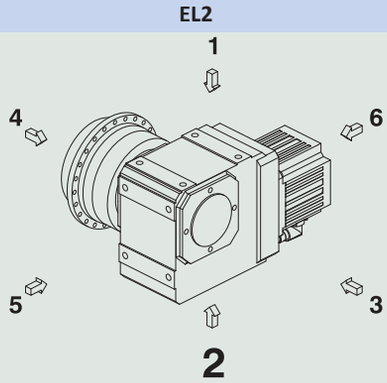	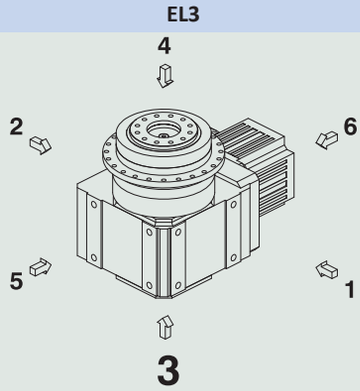

EL4	EL5	EL6
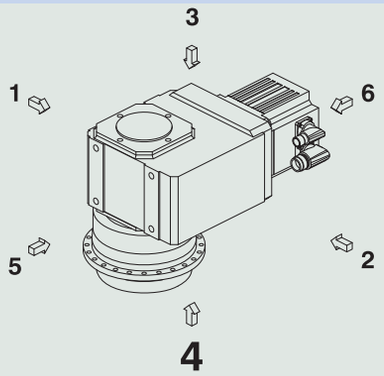	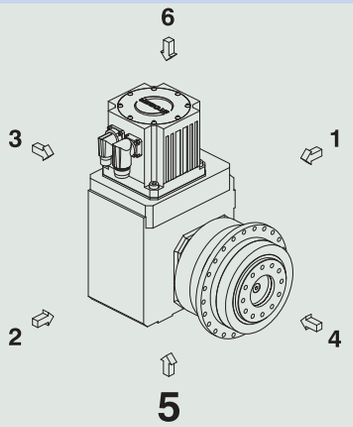	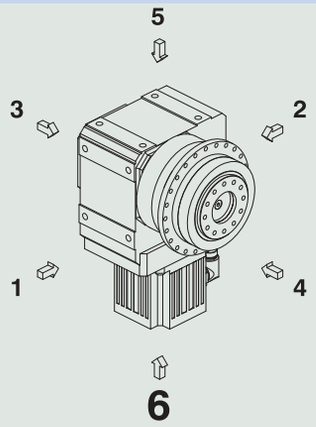

Since the lubricant filling volume of the gear unit depends on the mounting position, the mounting position must be specified when ordering.

14.5.4 Lubricants

STOBER fills the gear units with the amount and type of lubricant specified on the nameplate. The filling volume and the structure of the gear units depend on the mounting position.

Only install the gear units in the intended mounting position! Reposition the gear units only after consulting STOBER. Otherwise, STOBER assumes no liability for the gear units.

You will receive lubricants for use in the food industry upon request.

14.5.5 Position of the plug connectors

Mounting position EL1	Mounting position EL4
Plug connector in 270° position (standard)	Plug connector in 270° position (standard)
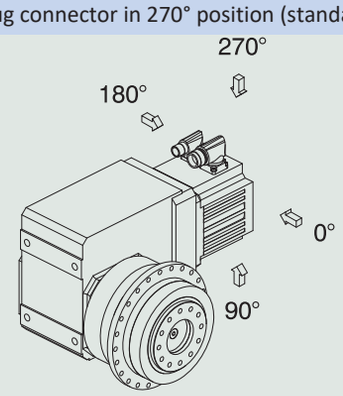	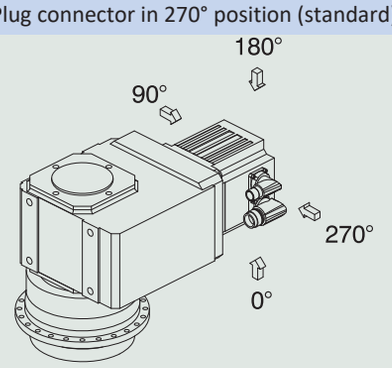

Indicate variations for your geared motor in the order.

Note that the plug connector position rotates along with the geared motor if the geared motor is in another mounting position.

14.5.6 Other product features

Feature	Value
Max. permitted gear unit temperature (on the surface of the gear unit)	≤ 90 °C
Paint	Black RAL 9005
Explosion-proof design in accordance with (ATEX) Directive 2014/34/EU (optional)	Not available
Efficiency:	
η_{get} three-stage	93%
η_{get} four-stage	92%
η_{get} five-stage	90%
Protection class:[1]	
Gear unit	IP65
Motor	IP56, optionally IP66

14.5.7 Direction of rotation

Output side 4	Output side 3
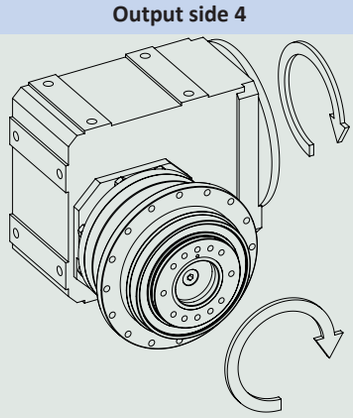	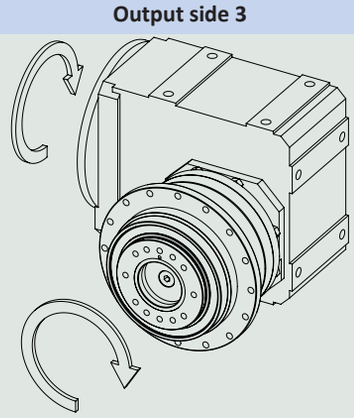

The pictures show mounting position EL1.

14.6 Project configuration

Project your drives using our SERVOsoft designing software. Download SERVOsoft for free at https://www.stoeber.de/en/ServoSoft.

Observe the limit conditions in this chapter to ensure a safe design for your drives.

An explanation of the formula symbols can be found in Chapter [▸ 23.1].

The formula symbols for values actually present in the application are marked with *.

14.6.1 Calculation of the operating point

Check the following conditions for operating points other than the nominal point M_{2N} specified in the selection tables.

For continuous operation in mounting positions EL1, EL2:

$$n_{1m*} \leq \frac{n_{1maxDBEL1,2}}{fB_T}$$

For continuous operation in mounting positions EL3, EL4, EL5, EL6:

$$n_{1m*} \leq \frac{n_{1maxDBEL3,4,5,6}}{fB_T}$$

[1] Observe the protection class of all the components.

For all mounting positions:

$$n_{1max*} \leq \frac{n_{1max\,ZB}}{fB_T}$$

$$M_{2eff*} \leq M_{2th}$$

$$M_{2acc*} \leq \frac{M_{2acc}}{fB_{ZB}}$$

$$M_{2NOT*} \leq M_{2NOT}$$

$$M_{2eq*} \leq M_{2N} \cdot \frac{S}{fB_{op} \cdot fB_t}$$

Refer to the selection tables for the values for $n_{1maxDBEL1,2}$ and $n_{1maxDBEL3,4,5,6}$, n_{1maxZB}, M_{2acc} (M_{2accHT} for reduced backlash), M_{2NOT}, M_{2N} and S.

The values for fB_T, fB_{op}, fB_t and fB_{ZB} can be found in the corresponding tables in this chapter.

Calculate the thermal limit torque M_{2th} for a duty cycle > 50%.

Example of cyclic operation

The following calculations are based on a representation of the power taken from the output based in accordance with the following example:

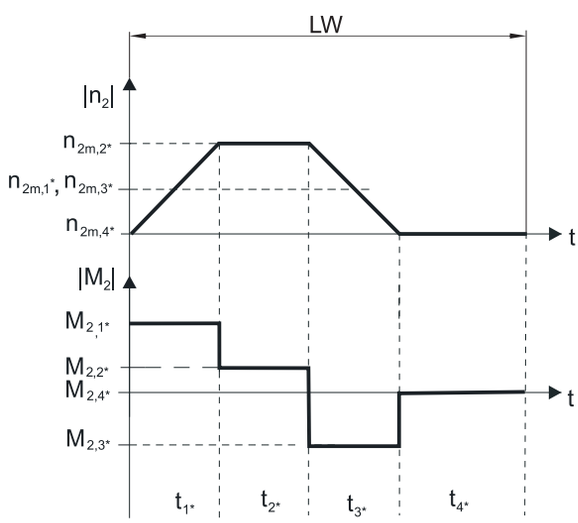

Calculation of the actual average input speed

$$n_{1m*} = n_{2m*} \cdot i$$

$$n_{2m*} = \frac{|n_{2m,1*}| \cdot t_{1*} + \ldots + |n_{2m,n*}| \cdot t_{n*}}{t_{1*} + \ldots + t_{n*}}$$

If $t_{1*} + \ldots + t_{3*} \geq 6$ min, calculate n_{2m*} without the rest phase t_{4*}.

The values for the ratio i can be found in the selection tables.

Calculation of the actual effective torque

$$M_{2eff*} = \sqrt{\frac{t_{1*} \cdot M_{2,1*}^2 + \ldots + t_{n*} \cdot M_{2,n*}^2}{t_{1*} + \ldots + t_{n*}}}$$

Calculation of the actual equivalent torque

$$M_{2eq*} = \sqrt[3]{\frac{|n_{2m,1*}| \cdot t_{1*} \cdot |M_{2,1*}^3| + \ldots + |n_{2m,n*}| \cdot t_{n*} \cdot |M_{2,n*}^3|}{|n_{2m,1*}| \cdot t_{1*} + \ldots + |n_{2m,n*}| \cdot t_{n*}}}$$

Calculation of the thermal limit torque

Calculate the thermal limit torque M_{2th} for a duty cycle ED_{10} > 50% and the actual average input speed n_{1m*}. (At $K_{mot,th} \leq 0$ you must reduce the average input speed n_{1m*} accordingly or select another geared motor size.)

$$M_{2th} = M_{op} \cdot i \cdot K_{mot,th}$$

$$K_{mot,th} = 0{,}93 - \frac{a_{th}}{1000} \cdot athEL \cdot fB_T \cdot \left(\frac{n_{1m*}}{1000}\right)^2$$

The values for i and a_{th} can be found in the selection tables.

The values for a_{thEL} and fB_T can be found in the corresponding tables in this chapter.

The value for the torque of the motor at operating point M_{op} with the determined average input speed n_{1m*} can be found in the motor curve of Chapter [▶ 17.3]. Note the size, nominal speed n_N and cooling type of the motor. The figure below shows an example of reading the torque M_{op} of a motor with convection cooling at the operating point.

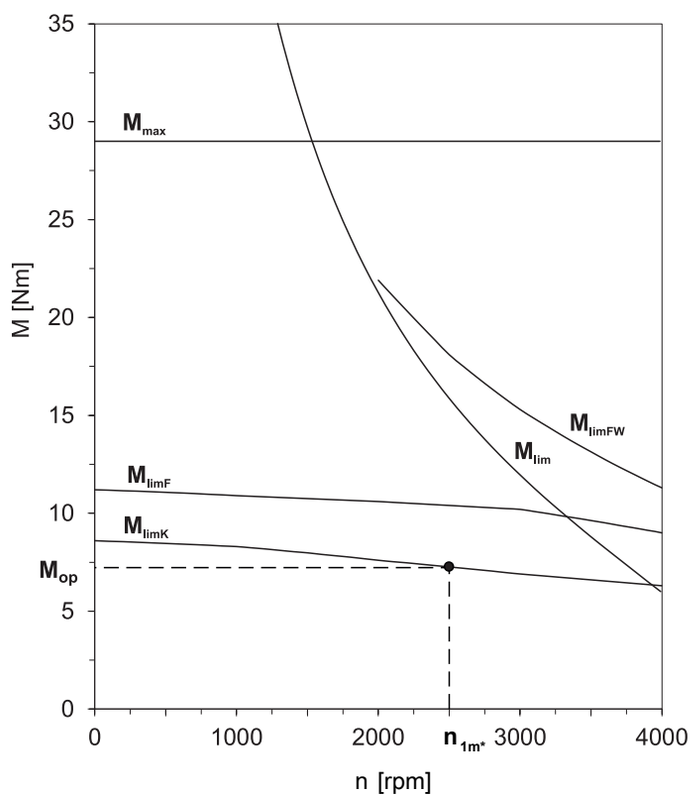

Operating factors

Parameter a_{thEL}

Mounting position	a_{thEL}
EL1, 2	1.0
EL3, 4, 5, 6	1.1

Operating mode	fB_{op}
Uniform continuous operation	1.00
Cyclic operation	1.25
Reversing load cyclic operation	1.40

Run time	fB_t
Daily runtime ≤ 8 h	1.00
Daily runtime ≤ 16 h	1.15
Daily runtime ≤ 24 h	1.20

Cyclic operation	fB_{ZB}
≤ 1000 load changes/hour (LW/h)	1.00
> 1000 load changes/hour (LW/h)	1.15

Temperature		fB_T
Motor cooling	**Surrounding temperature**	
Motor with forced ventilation	≤ 20 °C	0.9
	≤ 30 °C	1.0
	≤ 40 °C	1.15
Motor with convection cooling	≤ 20 °C	1.0
	≤ 30 °C	1.1
	≤ 40 °C	1.25

Notes

- The maximum permitted gear unit temperature (see the "Other product features" chapter) must not be exceeded. Doing so may result in damage to the geared motor.
- For braking from full speed (for example when the power fails or when setting up the machine), note the permitted gear unit torques (M_{2acc}, M_{2NOT}) in the selection tables.

14.6.2 Permitted shaft loads for the output shaft

The values specified in the tables apply to the permitted shaft loads:

- For shaft dimensions in accordance with the catalog
- For output speeds n_{2m*} ≤ 100 rpm ($F^{2axN} = F_{2ax100}$; $F_{2radN} = F_{2rad100}$; $M_{2kN} = M_{2k100}$)
- Only if radial forces on the gear unit are stabilized by its pilots (housing, flange shaft)

Permitted shaft loads for standard bearing S

Type	z_2 [mm]	F_{2ax100} [N]	$F_{2rad100}$ [N]	$F_{2rad,acc}$ [N]	M_{2k100} [Nm]	$M_{2k,acc}$ [Nm]	C_{2k} [Nm/arcmin]
PHQ4	83.0	2150	3095	3929	257	326	160
PHQ5	97.0	4150	4536	4897	440	475	380
PHQ7	86.0	6150	17045	17045	1466	1466	500
PHQ8	125.5	10050	27778	33333	3486	4183	1550
PHQ9	155.0	33000	48387	70968	7500	11000	7500
PHQ10	171.0	50000	51462	73099	8800	12500	9500
PHQ11	231.0	60000	47619	60606	11000	14000	11500
PHQ12	281.0	70000	53380	71040	15000	20000	14000

Permitted shaft loads for reinforced bearing V

Type	z_2 [mm]	F_{2ax100} [N]	$F_{2rad100}$ [N]	$F_{2rad,acc}$ [N]	M_{2k100} [Nm]	$M_{2k,acc}$ [Nm]	C_{2k} [Nm/arcmin]
PHQ4	88.5	2900	4000	4000	354	354	160
PHQ5	104.0	5000	5500	5500	572	572	380

For other output speeds, download diagrams at http://configurator.stoeber.de.

The following applies to output speeds n_{2m*} > 100 rpm:

$$F_{2axN} = \frac{F_{2ax100}}{\sqrt[3]{\frac{n_{2m*}}{100\ \text{rpm}}}} \qquad F_{2radN} = \frac{F_{2rad100}}{\sqrt[3]{\frac{n_{2m*}}{100\ \text{rpm}}}} \qquad M_{2kN} = \frac{M_{2k100}}{\sqrt[3]{\frac{n_{2m*}}{100\ \text{rpm}}}}$$

The values for F_{2ax100}, $F_{2rad100}$ and M_{2k100} can be found in the table "Permitted shaft loads" in this chapter.

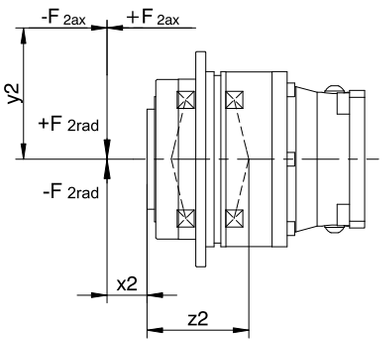

Fig. 1: Force application points

You can determine the permitted radial forces from the permitted breakdown torque M_{2kN} and $M_{2k,acc}$. The actual radial forces may not exceed the permitted radial forces. The permitted radial forces pertain to the shaft end (x2 = 0).

$$M_{2k,acc*} = \frac{2 \cdot F_{2ax*} \cdot y_2 + F_{2rad,acc*} \cdot (x_2 + z_2)}{1000} \leq M_{2k,acc}$$

For applications with multiple axial and/or radial forces, you must add the forces as vectors.

In the event of EMERGENCY OFF operation (max. 1000 load changes), you can multiply the permitted forces and torques for F_{2ax100}, $F_{2rad100}$ and M_{2k100} by a factor of two.

Also note the calculation for equivalent values:

$$M_{2k,eq*} = \sqrt[3]{\frac{|n_{2m,1*}| \cdot t_{1*} \cdot |M_{2k,acc,1*}{}^3| + \ldots + |n_{2m,n*}| \cdot t_{n*} \cdot |M_{2k,acc,n*}{}^3|}{|n_{2m,1*}| \cdot t_{1*} + \ldots + |n_{2m,n*}| \cdot t_{n*}}} \leq M_{2kN}$$

$$F_{2rad,eq*} = \sqrt[3]{\frac{|n_{2m,1*}| \cdot t_{1*} \cdot |F_{2rad,acc,1*}{}^3| + \ldots + |n_{2m,n*}| \cdot t_{n*} \cdot |F_{2rad,acc,n*}{}^3|}{|n_{2m,1*}| \cdot t_{1*} + \ldots + |n_{2m,n*}| \cdot t_{n*}}} \leq F_{2radN}$$

$$F_{2ax,eq*} \leq F_{2axN}$$

The following apply to the bearing service life L_{10h} ($ED_{10} \leq 40\%$):

$L_{10h} > 10000$ h with $1 < M_{2kN}/M_{2k*} < 1.25$

$L_{10h} > 20000$ h with $1.25 < M_{2kN}/M_{2k*} < 1.5$

$L_{10h} > 30000$ h with $1.5 < M_{2kN}/M_{2k*}$

For different duty cycles:

$$L_{10h} > L_{10h(ED_{10}=40\%)} \cdot \frac{40\%}{ED_{10}}$$

14.6.3 Recommendation for radial shaft seal rings

For a duty cycle > 60% and higher surrounding temperatures, we recommend radial shaft seal rings made of FKM at the output.

Properties:

- Excellent temperature resistance
- High chemical stability
- Very good resistance to aging
- Excellent resistance in oils and greases
- For use in the food, beverage and pharmaceutical industries

Leak-proofness

Our gear units are equipped with high-quality radial shaft seal rings and checked for leaks. However, a leak cannot be fully ruled out over the length of use of a gear unit. If you use a gear unit with goods incompatible with the lubricant, you must take measures to prevent direct contact with the gear unit lubricant in case of a leak.

14.6.4 Reverse operation

To ensure lubrication for circulating gearing parts during cyclic reverse operation from ± 20° to ± 90° at the output, pay careful attention to the position of the output shaft for the horizontal mounting of the gear unit, as shown in the diagrams below.

The images show the center position of reverse operation.

Cyclic reverse operation ≤ ± 20° on request.

PHQ4 – PHQ12

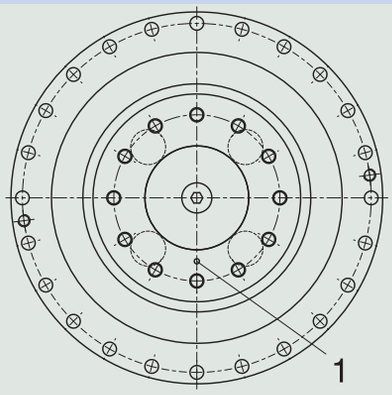

1 Position of the mark: bottom

Please note that the hole pattern may be different, depending on the size of the planetary gear unit.

14.7 Additional documentation

Additional documentation related to the product can be found at
http://www.stoeber.de/en/downloads/

Enter the ID of the documentation in the Search... field.

Documentation	ID
Operating manual for KL/KS/PHK/PHKX/PHQK/PK/PKX right-angle servo gear units and right-angle servo geared motors	443150_en

15 KL helical bevel geared motors

Table of contents

15.1 Overview ... 392

15.2 Selection tables ... 393

15.3 Dimensional drawings ... 395

15.3.1 A shaft design (hollow shaft), G housing design (pitch circle diameter) ... 396

15.3.2 A shaft design (hollow shaft), NG housing design (base + pitch circle diameter) ... 398

15.3.3 A shaft design (hollow shaft), F housing design (flange) ... 400

15.3.4 G shaft design (solid shaft without feather key), G housing design (pitch circle diameter) ... 402

15.3.5 G shaft design (solid shaft without feather key), NG housing design (base + pitch circle diameter) ... 403

15.3.6 G shaft design (solid shaft without feather key), F housing design (flange) ... 404

15.3.7 P shaft design (solid shaft with feather key), G housing design (pitch circle diameter) ... 405

15.3.8 P shaft design (solid shaft with feather key), NG housing design (base + pitch circle diameter) ... 406

15.3.9 P shaft design (solid shaft with feather key), F housing design (flange) ... 407

15.3.10 S shaft design (hollow shaft with shrink disk), G housing design (pitch circle diameter) ... 408

15.3.11 S shaft design (hollow shaft with shrink disk), NG housing design (base + pitch circle diameter) ... 410

15.3.12 S shaft design (hollow shaft with shrink disk), F housing design (flange) ... 412

15.4 Type designation ... 414

15.4.1 Nameplate ... 415

15.5 Product description ... 415

15.5.1 Input options ... 415

15.5.2 Housing design ... 416

15.5.3 Combinatorial shaft/housing design ... 416

15.5.4 Installation conditions ... 416

15.5.5 Gear unit sides ... 417

15.5.6 Lubricants ... 417

15.5.7 Position of the plug connectors ... 417

15.5.8 Other product features ... 417

15.5.9 Direction of rotation ... 418

15.6 Project configuration ... 418

15.6.1 Calculation of the operating point ... 418

15.6.2 Permitted shaft loads for the output shaft ... 421

15.6.3 Radial shaft seal rings ... 422

15.7 Additional documentation ... 423

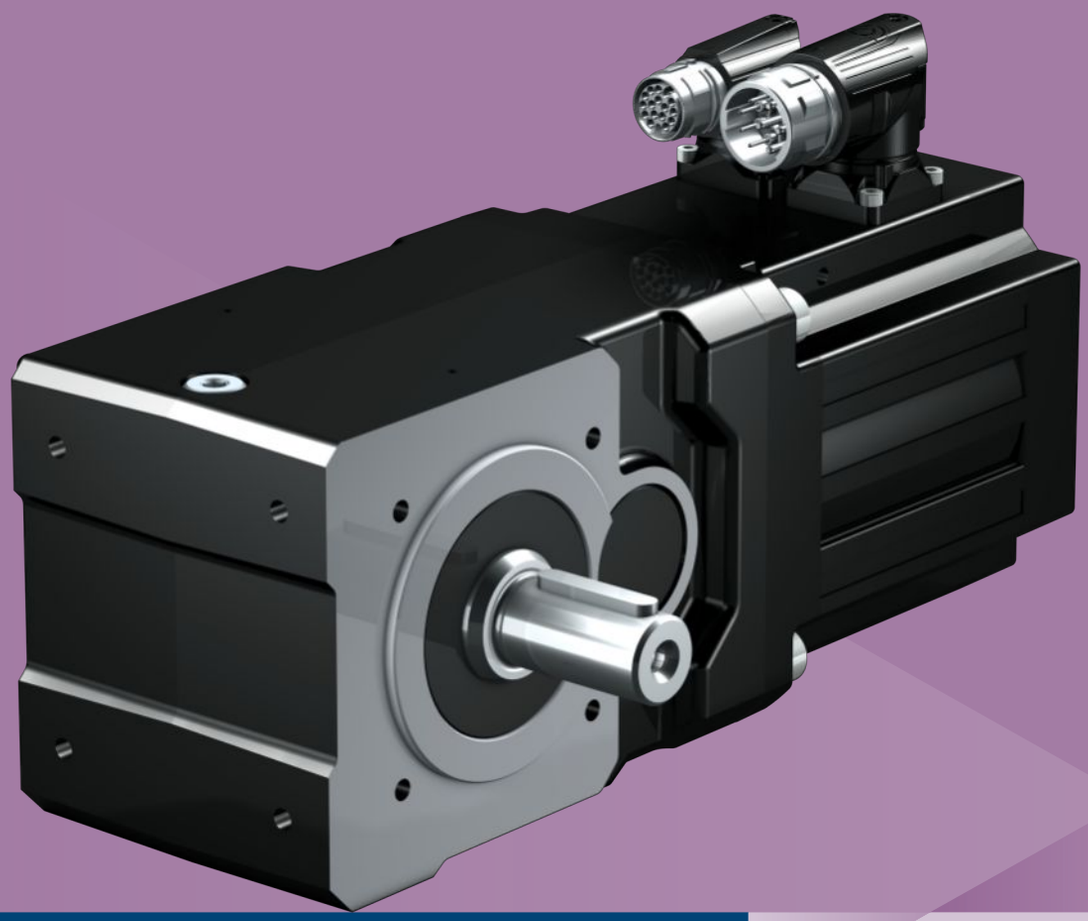

15 Helical bevel geared motors KL

15.1 Overview

Compact helical-geared right-angle geared motors

Features

Power density	★★☆☆☆
Backlash	★☆☆☆☆
Price category	€
Shaft load	★★☆☆☆
Smooth operation	★★☆☆☆
Torsional stiffness	★★☆☆☆
Mass moment of inertia	★★★★★
Helical gearing	✓
Maintenance-free	✓
Any mounting position	✓
Small installation space	✓
FKM seal ring at the input	✓
Compact and highly dynamic due to direct motor attachment	✓

Key ★☆☆☆☆ good | ★★★★★ excellent
€ Economy | €€€€€ Premium

Technical data

i	4 – 32
M_{2acc}	11 – 65 Nm
$\Delta\phi_2$	16 – 25 arcmin
η_{get}	97 %

15.2 Selection tables

The technical data specified in the selection tables applies to:

- Installation altitudes up to 1000 m above sea level
- Surrounding temperatures from 0 °C to 40 °C
- Drives with convection-cooled motors (e.g. EZ401**U**)

For the technical data on drives with forced ventilated motors (e.g. EZ401**B**), refer to http://configurator.stoeber.de.

An explanation of the formula symbols can be found in Chapter [▶ 23.1].

n_{2N} [rpm]	M_{2N} [Nm]	$M_{2,0}$ [Nm]	a_{th}	S	Type	M_{2acc} [Nm]	M_{2NOT} [Nm]	i	i_{exakt}	n_{1max} DB [rpm]	n_{1max} ZB [rpm]	J_1 [kgcm²]	$\Delta\varphi_2$ [arcmin]	C_2 [Nm/arcmin]	m [kg]
KL1 (n_{1N} = 3000 rpm, $M_{2acc,max}$ = 30 Nm)															
188	14	15	16	1.7	KL102_0160 EZ301U	30	60	16.00	16/1	4000	6000	0.22	20	1.8	6.6
375	7.2	7.4	17	2.7	KL102_0080 EZ301U	22	58	8.000	8/1	3500	5000	0.28	20	1.8	6.6
375	12	13	29	1.6	KL102_0080 EZ302U	30	58	8.000	8/1	3500	5000	0.38	20	1.8	7.2
375	16	17	38	1.2	KL102_0080 EZ303U	30	58	8.000	8/1	3500	5000	0.49	20	1.8	7.7
750	3.6	3.7	22	3.6	KL102_0040 EZ301U	11	29	4.000	4/1	3500	5000	0.31	25	1.3	6.6
750	6.2	6.5	37	2.1	KL102_0040 EZ302U	19	29	4.000	4/1	3500	5000	0.41	25	1.3	7.2
750	8.0	8.5	49	1.6	KL102_0040 EZ303U	22	29	4.000	4/1	3500	5000	0.52	25	1.3	7.7
KL1 (n_{1N} = 6000 rpm, $M_{2acc,max}$ = 30 Nm)															
375	14	15	20	1.4	KL102_0160 EZ301U	30	60	16.00	16/1	4000	6000	0.22	20	1.8	6.6
KL2 (n_{1N} = 3000 rpm, $M_{2acc,max}$ = 65 Nm)															
94	29	29	11	1.6	KL202_0320 EZ301U	65	130	32.00	32/1	4000	6000	0.26	16	3.2	9.1
188	14	15	9.0	3.5	KL202_0160 EZ301U	43	120	16.00	16/1	4000	6000	0.28	16	4.0	9.1
188	25	26	15	2.0	KL202_0160 EZ302U	60	120	16.00	16/1	4000	6000	0.38	16	4.0	9.7
188	32	34	20	1.6	KL202_0160 EZ303U	60	120	16.00	16/1	4000	6000	0.49	16	4.0	10
375	7.2	7.4	15	3.5	KL202_0080 EZ301U	22	58	8.000	8/1	4000	6000	0.31	20	2.4	9.1
375	12	13	26	2.0	KL202_0080 EZ302U	35	58	8.000	8/1	4000	6000	0.41	20	2.4	9.7
375	16	17	33	1.6	KL202_0080 EZ303U	35	58	8.000	8/1	4000	6000	0.52	20	2.4	10
375	22	23	29	1.8	KL202_0080 EZ401U	60	120	8.000	8/1	3500	5000	1.2	16	4.0	12
375	36	40	48	1.1	KL202_0080 EZ402U	60	120	8.000	8/1	3500	5000	1.9	16	4.0	13
750	11	12	34	2.6	KL202_0040 EZ401U	33	110	4.000	4/1	3500	5000	1.4	20	2.4	12
750	18	20	57	1.5	KL202_0040 EZ402U	53	110	4.000	4/1	3500	5000	2.1	20	2.4	13
750	27	33	84	1.0	KL202_0040 EZ404U	53	110	4.000	4/1	3500	5000	3.4	20	2.4	15
KL2 (n_{1N} = 6000 rpm, $M_{2acc,max}$ = 65 Nm)															
188	28	29	14	1.4	KL202_0320 EZ301U	65	130	32.00	32/1	4000	6000	0.26	16	3.2	9.1
375	14	15	11	2.9	KL202_0160 EZ301U	43	120	16.00	16/1	4000	6000	0.28	16	4.0	9.1
375	23	26	18	1.7	KL202_0160 EZ302U	60	120	16.00	16/1	4000	6000	0.38	16	4.0	9.7
375	30	35	24	1.3	KL202_0160 EZ303U	60	120	16.00	16/1	4000	6000	0.49	16	4.0	10
375	36	43	28	1.1	KL202_0160 EZ401U	60	120	16.00	16/1	4000	6000	1.0	16	4.0	12
750	6.9	7.4	14	3.7	KL202_0080 EZ301U	22	58	8.000	8/1	4000	6000	0.31	20	2.4	9.1
750	12	13	24	2.2	KL202_0080 EZ302U	35	58	8.000	8/1	4000	6000	0.41	20	2.4	9.7
750	15	17	32	1.7	KL202_0080 EZ303U	35	58	8.000	8/1	4000	6000	0.52	20	2.4	10
750	18	22	37	1.4	KL202_0080 EZ401U	35	58	8.000	8/1	4000	6000	1.0	20	2.4	12

15.3 Dimensional drawings

In this chapter you can find the dimensions of the geared motors.

There is a dimensional drawing for every possible shaft/housing design, each with the tables for gear unit dimensions, motor dimensions and geared motor dimensions.

Dimensions can exceed the specifications of ISO 2768-mK due to casting tolerances or accumulation of individual tolerances.

We reserve the right to make dimensional changes due to ongoing technical development.

You can download 3D models of our standard drives at http://configurator.stoeber.de.

Combination options and the dimensions of forced ventilated geared motors can also be found at http://configurator.stoeber.de.

Tolerances

Axis height in accordance with DIN 747	Tolerance
Up to 50 mm	-0.4 mm
Up to 250 mm	-0.5 mm
Up to 630 mm	-0.6 mm

Solid shaft	Tolerance
Shaft ∅ fit ≤ 50 mm	DIN 748-1, ISO k6
Shaft ∅ fit > 50 mm	DIN 748-1, ISO m6
Feather keys	DIN 6885-1, high form A

Centering holes in solid shafts in accordance with DIN 332-2, DR shape

Thread size	M4	M5	M6	M8	M10	M12	M16	M20	M24
Thread depth [mm]	10	12.5	16	19	22	28	36	42	50

Hollow shaft	Tolerance
Hollow shaft hole fit	ISO G7
Feather keys	DIN 6885-1, high form

Flange	Pilot tolerance
Up to 300 mm	ISO j6
Starting at 350 mm	ISO h6

15.3.1 A shaft design (hollow shaft), G housing design (pitch circle diameter)

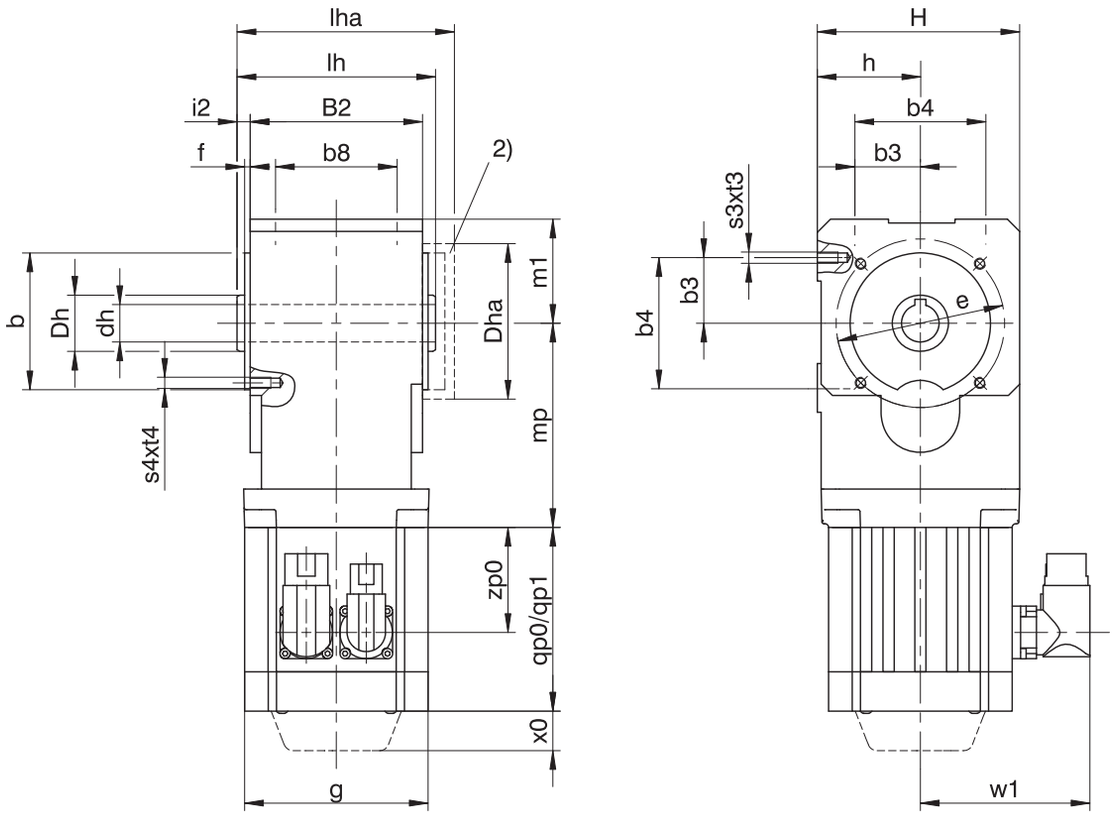

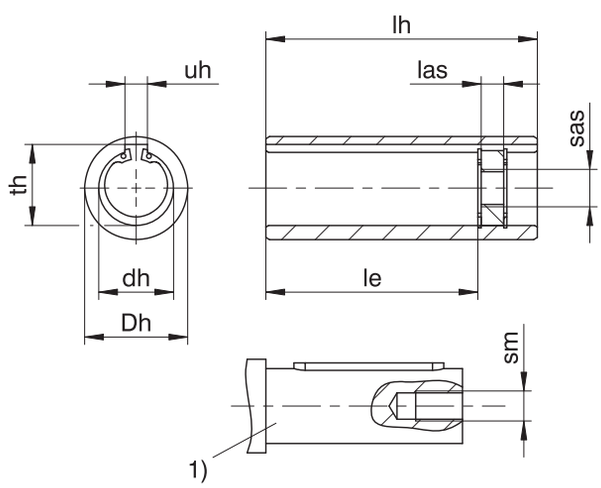

qp0	Applies to motors without brake.	qp1	Applies to motors with brake.
x0	Applies to encoders using an optical measuring method.	w1	Different for the One Cable Solution (OCS), see the chapter [▸ 17.4]
1)	The length of the machine shaft must be at least 2.2 x ∅dh and the length of the feather key must be at least 2 x ∅dh.	2)	Cover (optional)

Dimensions of gear units

Type	Øb	b3	b4	b8	B2	Ødh	Dh	Dha	Øe	f	h	H	i2	le	lh	las	lha	m1	s3	s4	sm	sas	t3	t4	th	uh
KL1	60_{j6}	27.5	55	50	75	16^{H7}	25	70	75	3	46	90	6	60.5	87	12	91	46	M6	M6	M5	M6	11	11	18.3	5^{JS9}
KL2	75_{j6}	35.0	70	65	92	20^{H7}	30	80	90	3	55	108	7	79.5	106	12	110	55	M6	M6	M6	M8	13	13	22.8	6^{JS9}

Dimensions of motors

Type	□g	qp0	qp1	w1	x0	zp0
EZ301U	72	90	130.0	55.5	21	54.5
EZ302U	72	112	152.0	55.5	21	76.5
EZ303U	72	134	174.0	55.5	21	98.5
EZ401U	98	98	146.5	91.0	22	56.0
EZ402U	98	123	171.5	91.0	22	81.0
EZ404U	98	173	221.5	91.0	22	131.0

Dimensions of geared motors

Type	EZ3	EZ4
	mp	mp
KL102	95.5	–
KL202	112.5	109.0

15.3.2 A shaft design (hollow shaft), NG housing design (base + pitch circle diameter)

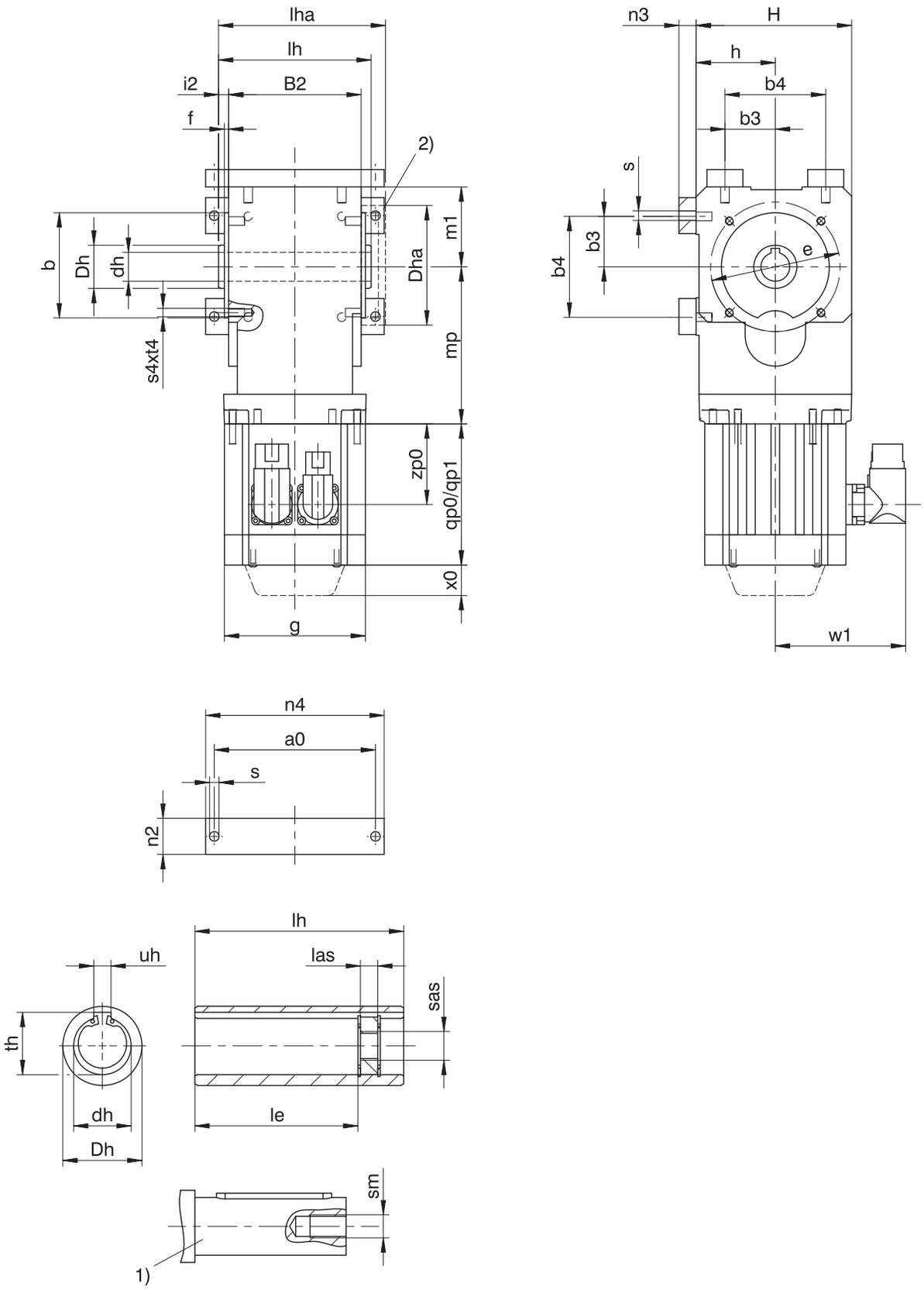

qp0	Applies to motors without brake.	qp1	Applies to motors with brake.
x0	Applies to encoders using an optical measuring method.	w1	Different for the One Cable Solution (OCS), see the chapter [▸ 17.4]
1)	The length of the machine shaft must be at least 2.2 x ∅dh and the length of the feather key must be at least 2 x ∅dh.	2)	Cover (optional)

Dimensions of gear units

Type	a0	Øb	b3	b4	B2	Ødh	Dh	Dha	Øe	f	h	H	i2	le	lh	las	lha	m1	n2	n3	n4	Øs	s4	sm	sas	t4	th	uh
KL1	95	60_{j6}	27.5	55	75	16^{H7}	25	70	75	3	46	90	6	60.5	87	12	91	46	20	12	107	6.6	M6	M5	M6	11	18.3	5^{JS9}
KL2	112	75_{j6}	35.0	70	92	20^{H7}	30	80	90	3	55	108	7	79.5	106	12	110	55	25	12	124	6.6	M6	M6	M8	13	22.8	6^{JS9}

Dimensions of motors

Type	□g	qp0	qp1	w1	x0	zp0
EZ301U	72	90	130.0	55.5	21	54.5
EZ302U	72	112	152.0	55.5	21	76.5
EZ303U	72	134	174.0	55.5	21	98.5
EZ401U	98	98	146.5	91.0	22	56.0
EZ402U	98	123	171.5	91.0	22	81.0
EZ404U	98	173	221.5	91.0	22	131.0

Dimensions of geared motors

Type	EZ3	EZ4
	mp	mp
KL102	95.5	–
KL202	112.5	109.0

15.3.3 A shaft design (hollow shaft), F housing design (flange)

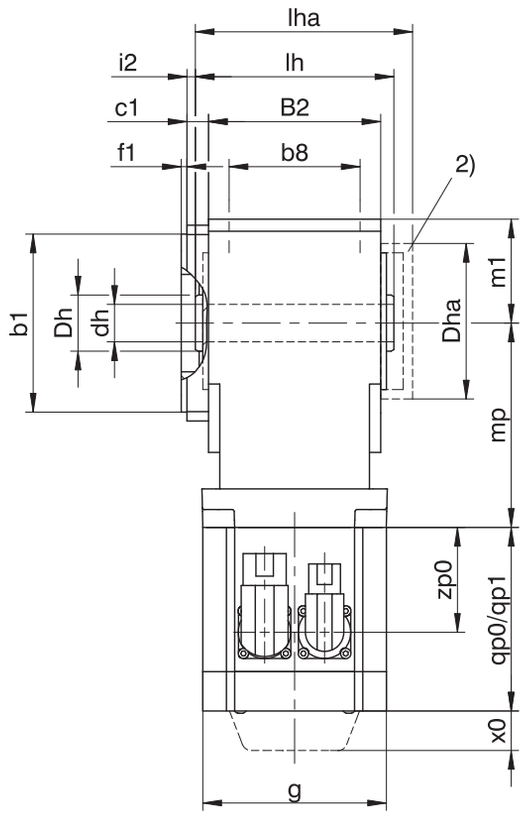

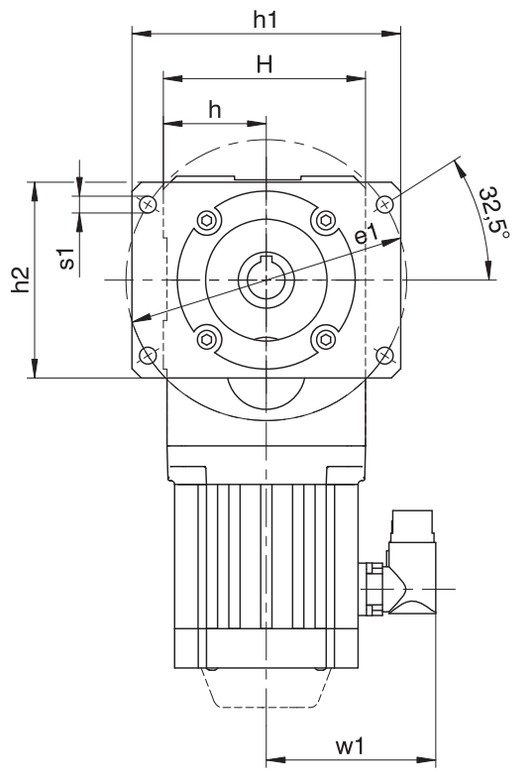

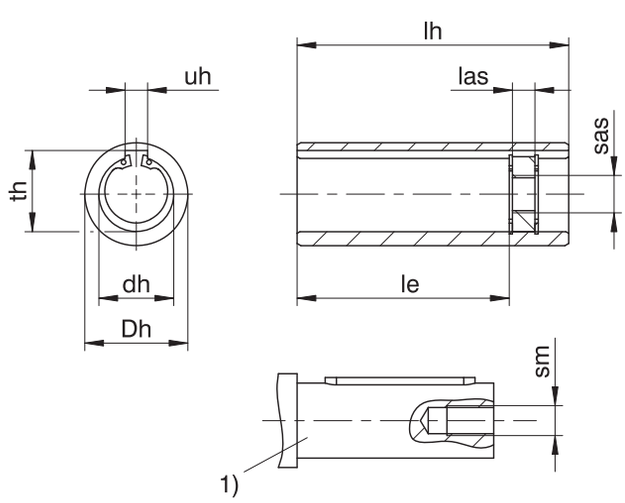

qp0	Applies to motors without brake.	qp1	Applies to motors with brake.
x0	Applies to encoders using an optical measuring method.	w1	Different for the One Cable Solution (OCS), see the chapter [▸ 17.4]
1)	The length of the machine shaft must be at least 2.2 x ∅dh and the length of the feather key must be at least 2 x ∅dh.	2)	Cover (optional)

Dimensions of gear units

Type	Øb1	b8	B2	c1	Ødh	Dh	Dha	Øe1	f1	h	h1	h2	H	i2	le	lh	las	lha	m1	Øs1	sm	sas	th	uh
KL1	60_{j6}	50	75	11.5	16^{H7}	25	70	130	3	46	128.5	88.5	90	5.5	60.5	87	12	91	46	9	M5	M6	18.3	5^{JS9}
KL2	95_{j6}	65	92	11.5	20^{H7}	30	80	150	3	55	143.5	104.5	108	4.5	79.5	106	12	110	55	9	M6	M8	22.8	6^{JS9}

Dimensions of motors

Type	□g	qp0	qp1	w1	x0	zp0
EZ301U	72	90	130.0	55.5	21	54.5
EZ302U	72	112	152.0	55.5	21	76.5
EZ303U	72	134	174.0	55.5	21	98.5
EZ401U	98	98	146.5	91.0	22	56.0
EZ402U	98	123	171.5	91.0	22	81.0
EZ404U	98	173	221.5	91.0	22	131.0

Dimensions of geared motors

Type	EZ3	EZ4
	mp	mp
KL102	95.5	–
KL202	112.5	109.0

15.3.4 G shaft design (solid shaft without feather key), G housing design (pitch circle diameter)

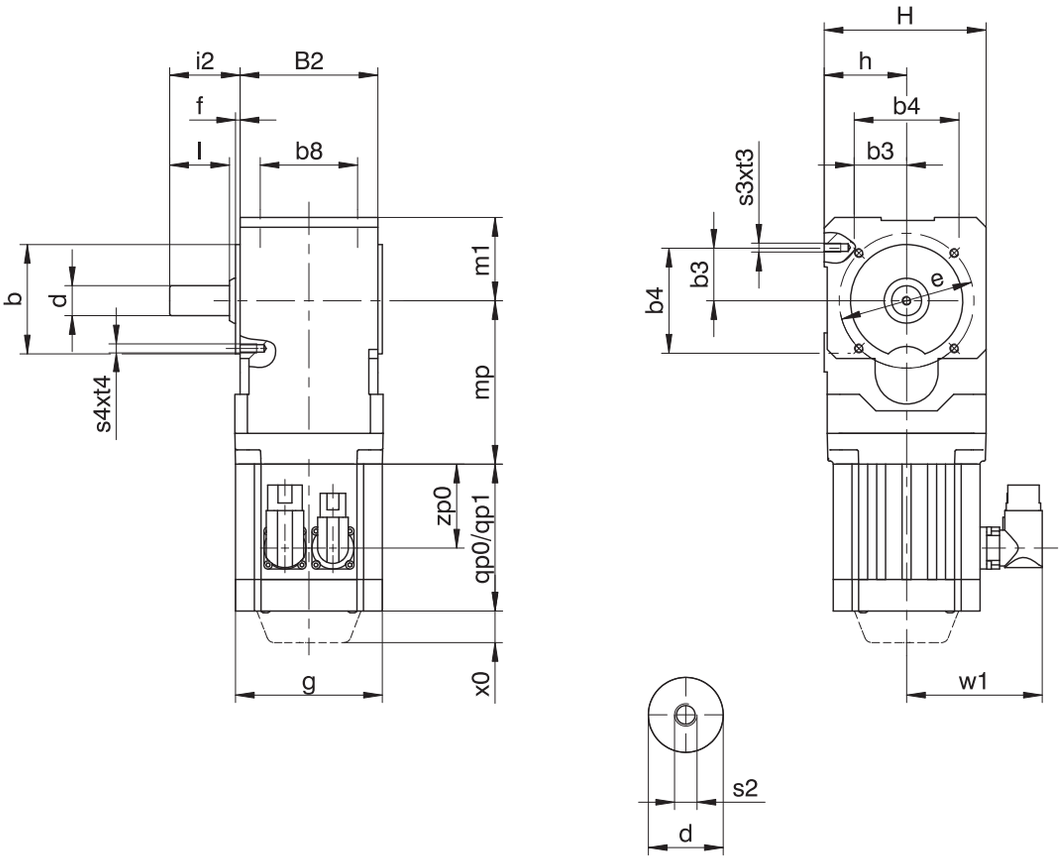

qp0	Applies to motors without brake.	qp1	Applies to motors with brake.
x0	Applies to encoders using an optical measuring method.	w1	Different for the One Cable Solution (OCS), see the chapter [▸ 17.4]

Dimensions of gear units

Type	Øb	b3	b4	b8	B2	Ød	Øe	f	h	H	i2	l	m1	s2	s3	s4	t3	t4
KL1	60_{j6}	27.5	55	50	75	16_{k6}	75	3	46	90	38	32	46	M5	M6	M6	11	11
KL2	75_{j6}	35.0	70	65	92	20_{k6}	90	3	55	108	47	40	55	M6	M6	M6	13	13

Dimensions of motors

Type	□g	qp0	qp1	w1	x0	zp0
EZ301U	72	90	130.0	55.5	21	54.5
EZ302U	72	112	152.0	55.5	21	76.5
EZ303U	72	134	174.0	55.5	21	98.5
EZ401U	98	98	146.5	91.0	22	56.0
EZ402U	98	123	171.5	91.0	22	81.0
EZ404U	98	173	221.5	91.0	22	131.0

Dimensions of geared motors

Type	EZ3	EZ4
	mp	mp
KL102	95.5	–
KL202	112.5	109.0

15.3.5 G shaft design (solid shaft without feather key), NG housing design (base + pitch circle diameter)

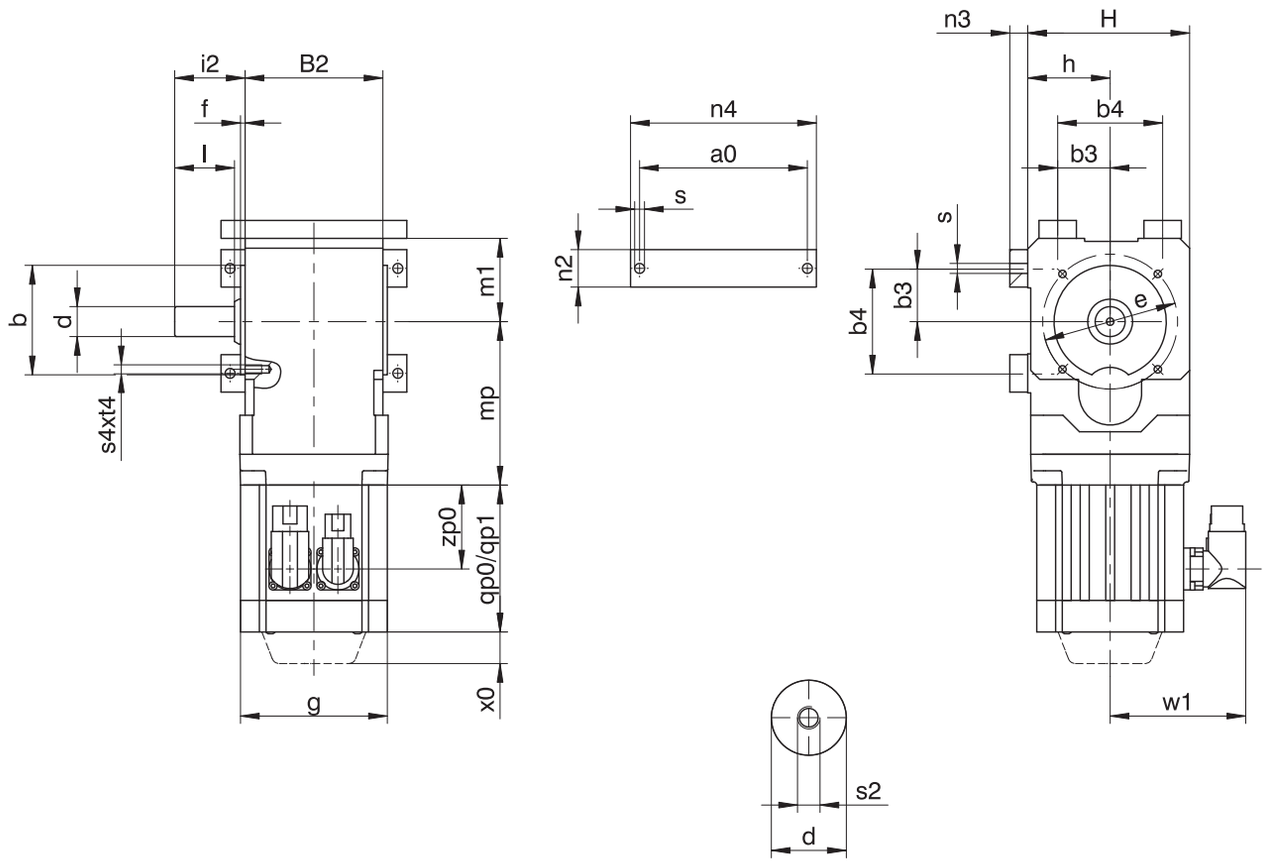

qp0	Applies to motors without brake.	qp1	Applies to motors with brake.
x0	Applies to encoders using an optical measuring method.	w1	Different for the One Cable Solution (OCS), see the chapter [▸ 17.4]

Dimensions of gear units

Type	a0	Øb	b3	b4	B2	Ød	Øe	f	h	H	i2	l	m1	n2	n3	n4	Øs	s2	s4	t4
KL1	95	60_{j6}	27.5	55	75	16_{k6}	75	3	46	90	38	32	46	20	12	107	6.6	M5	M6	11
KL2	112	75_{j6}	35.0	70	92	20_{k6}	90	3	55	108	47	40	55	25	12	124	6.6	M6	M6	13

Dimensions of motors

Type	□g	qp0	qp1	w1	x0	zp0
EZ301U	72	90	130.0	55.5	21	54.5
EZ302U	72	112	152.0	55.5	21	76.5
EZ303U	72	134	174.0	55.5	21	98.5
EZ401U	98	98	146.5	91.0	22	56.0
EZ402U	98	123	171.5	91.0	22	81.0
EZ404U	98	173	221.5	91.0	22	131.0

Dimensions of geared motors

Type	EZ3	EZ4
	mp	mp
KL102	95.5	–
KL202	112.5	109.0

15.3.6 G shaft design (solid shaft without feather key), F housing design (flange)

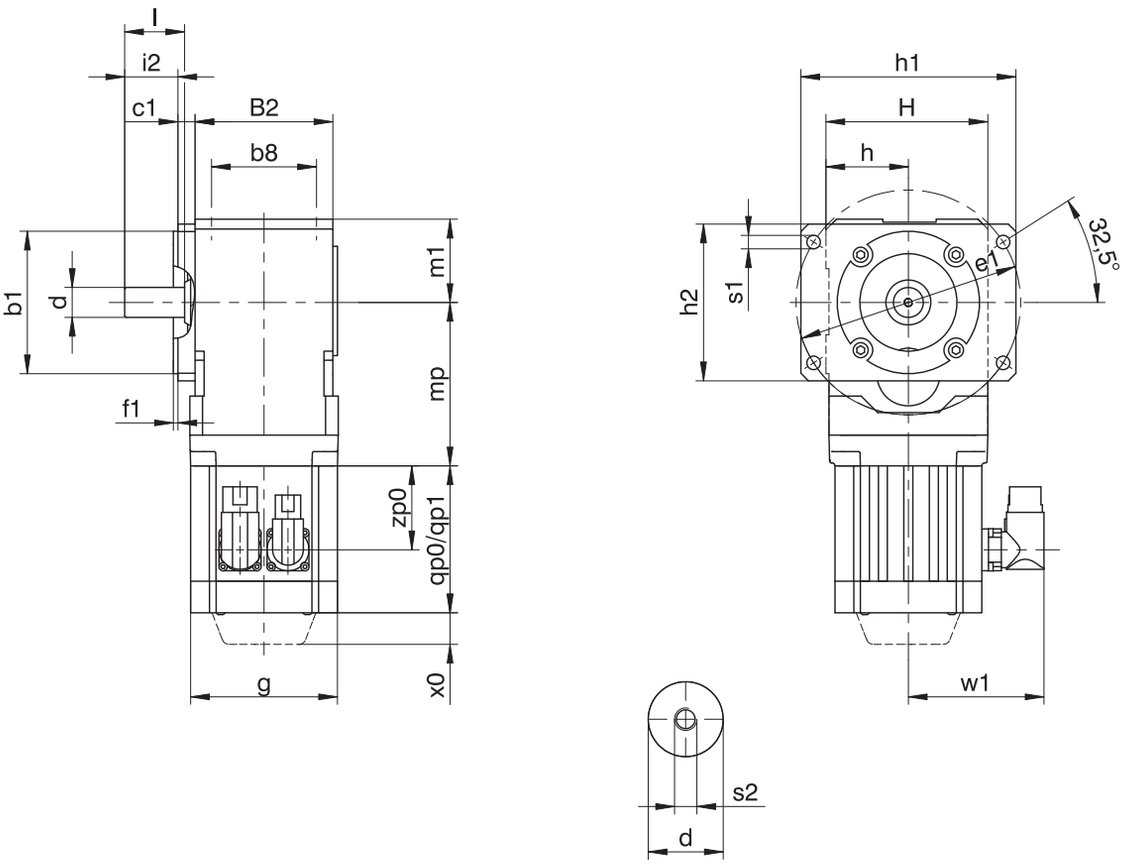

qp0	Applies to motors without brake.	qp1	Applies to motors with brake.
x0	Applies to encoders using an optical measuring method.	w1	Different for the One Cable Solution (OCS), see the chapter [▸ 17.4]

Dimensions of gear units

Type	Øb1	b8	B2	c1	Ød	Øe1	f1	h	h1	h2	H	i2	l	m1	Øs1	s2
KL1	60_{j6}	50	75	11.5	16_{k6}	130	3	46	128.5	88.5	90	26.5	32	46	9	M5
KL2	95_{j6}	65	92	11.5	20_{k6}	150	3	55	143.5	104.5	108	35.5	40	55	9	M6

Dimensions of motors

Type	□g	qp0	qp1	w1	x0	zp0
EZ301U	72	90	130.0	55.5	21	54.5
EZ302U	72	112	152.0	55.5	21	76.5
EZ303U	72	134	174.0	55.5	21	98.5
EZ401U	98	98	146.5	91.0	22	56.0
EZ402U	98	123	171.5	91.0	22	81.0
EZ404U	98	173	221.5	91.0	22	131.0

Dimensions of geared motors

Type	EZ3	EZ4
	mp	mp
KL102	95.5	–
KL202	112.5	109.0

15.3.7 P shaft design (solid shaft with feather key), G housing design (pitch circle diameter)

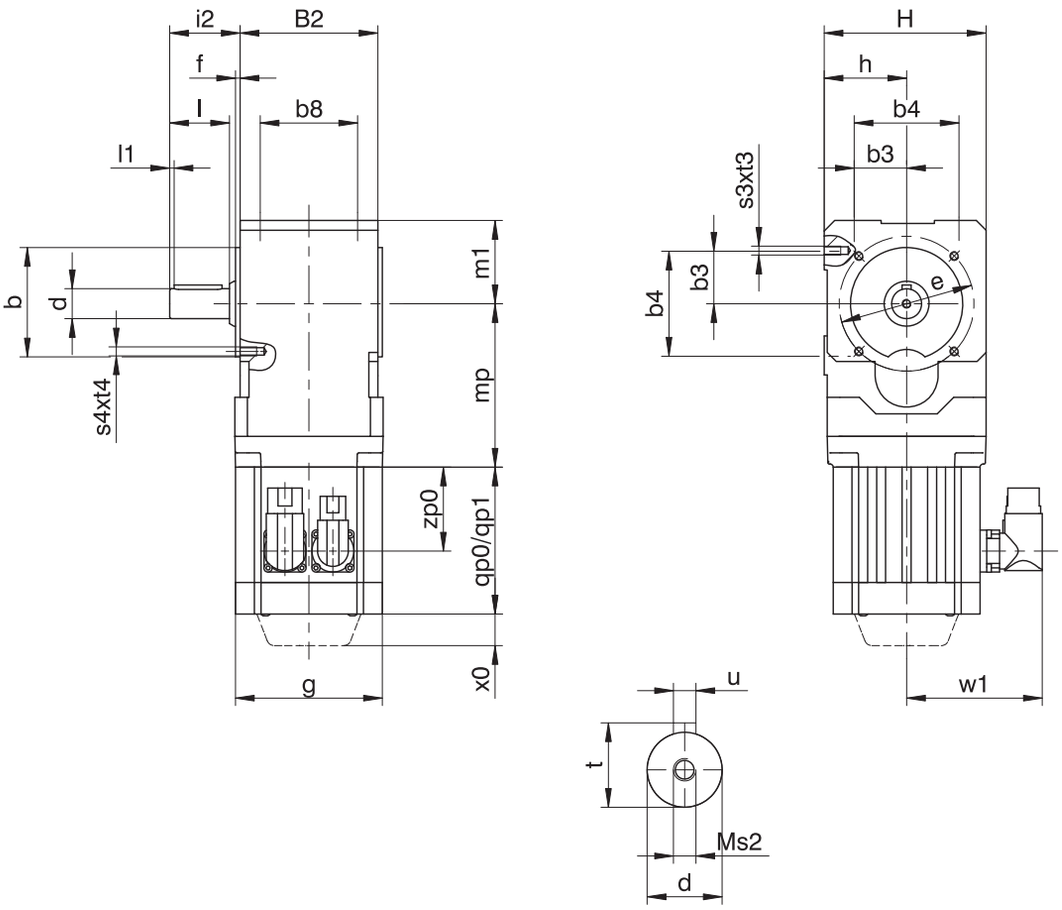

qp0	Applies to motors without brake.	qp1	Applies to motors with brake.
x0	Applies to encoders using an optical measuring method.	w1	Different for the One Cable Solution (OCS), see the chapter [▸ 17.4]

Dimensions of gear units

Type	Øb	b3	b4	b8	B2	Ød	Øe	f	h	H	i2	l	l1	m1	s2	s3	s4	t	t3	t4	u
KL1	60_{j6}	27.5	55	50	75	16_{k6}	75	3	46	90	38	32	3	46	M5	M6	M6	18	11	11	A5×5×22
KL2	75_{j6}	35.0	70	65	92	20_{k6}	90	3	55	108	47	40	3	55	M6	M6	M6	22.5	13	13	A6×6×32

Dimensions of motors

Type	□g	qp0	qp1	w1	x0	zp0
EZ301U	72	90	130.0	55.5	21	54.5
EZ302U	72	112	152.0	55.5	21	76.5
EZ303U	72	134	174.0	55.5	21	98.5
EZ401U	98	98	146.5	91.0	22	56.0
EZ402U	98	123	171.5	91.0	22	81.0
EZ404U	98	173	221.5	91.0	22	131.0

Dimensions of geared motors

Type	EZ3	EZ4
	mp	mp
KL102	95.5	–
KL202	112.5	109.0

15.3.8 P shaft design (solid shaft with feather key), NG housing design (base + pitch circle diameter)

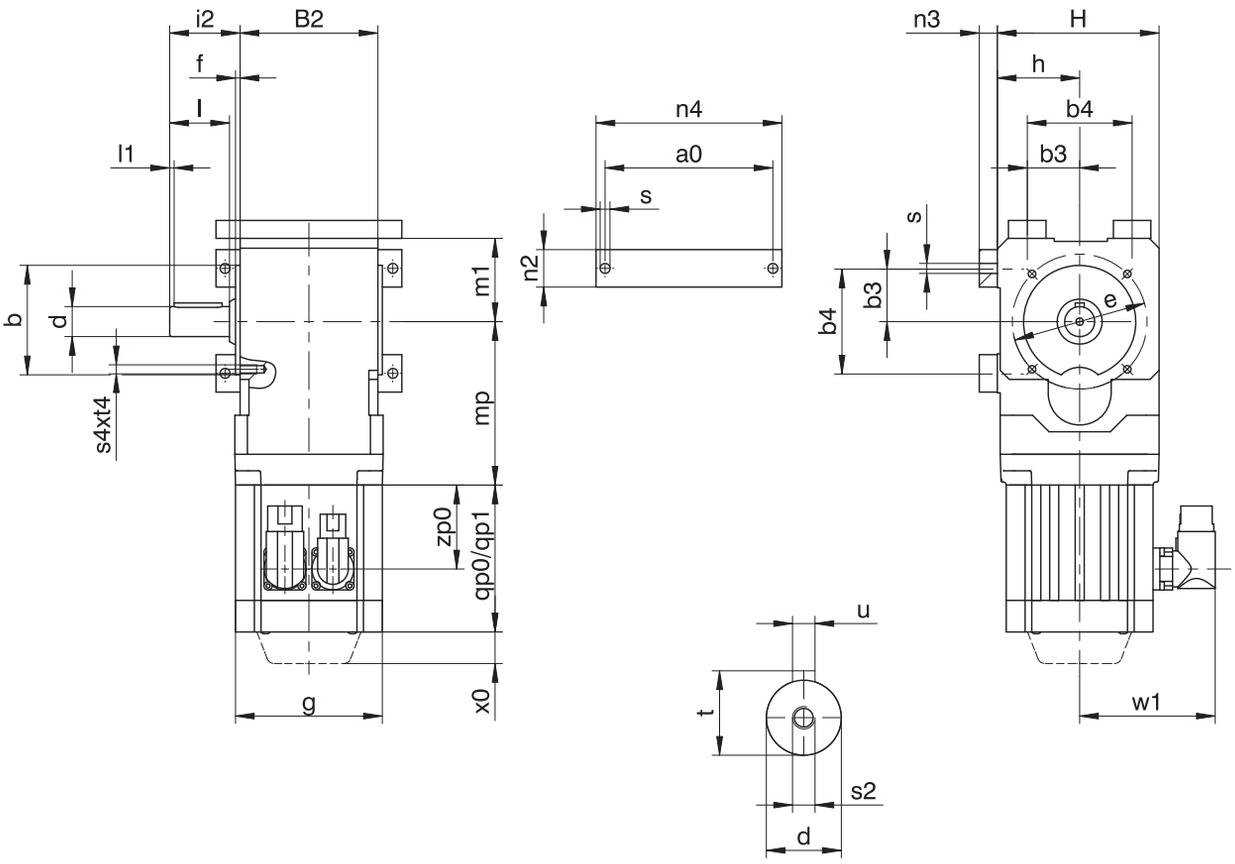

qp0	Applies to motors without brake.	qp1	Applies to motors with brake.
x0	Applies to encoders using an optical measuring method.	w1	Different for the One Cable Solution (OCS), see the chapter [▸ 17.4]

Dimensions of gear units

Type	a0	Øb	b3	b4	B2	Ød	Øe	f	h	H	i2	l	l1	m1	n2	n3	n4	Øs	s2	s4	t	t4	u
KL1	95	60_{j6}	27.5	55	75	16_{k6}	75	3	46	90	38	32	3	46	20	12	107	6.6	M5	M6	18.0	11	A5×5×22
KL2	112	75_{j6}	35.0	70	92	20_{k6}	90	3	55	108	47	40	3	55	25	12	124	6.6	M6	M6	22.5	13	A6×6×32

Dimensions of motors

Type	□g	qp0	qp1	w1	x0	zp0
EZ301U	72	90	130.0	55.5	21	54.5
EZ302U	72	112	152.0	55.5	21	76.5
EZ303U	72	134	174.0	55.5	21	98.5
EZ401U	98	98	146.5	91.0	22	56.0
EZ402U	98	123	171.5	91.0	22	81.0
EZ404U	98	173	221.5	91.0	22	131.0

Dimensions of geared motors

Type	EZ3	EZ4
	mp	mp
KL102	95.5	–
KL202	112.5	109.0

15.3.9 P shaft design (solid shaft with feather key), F housing design (flange)

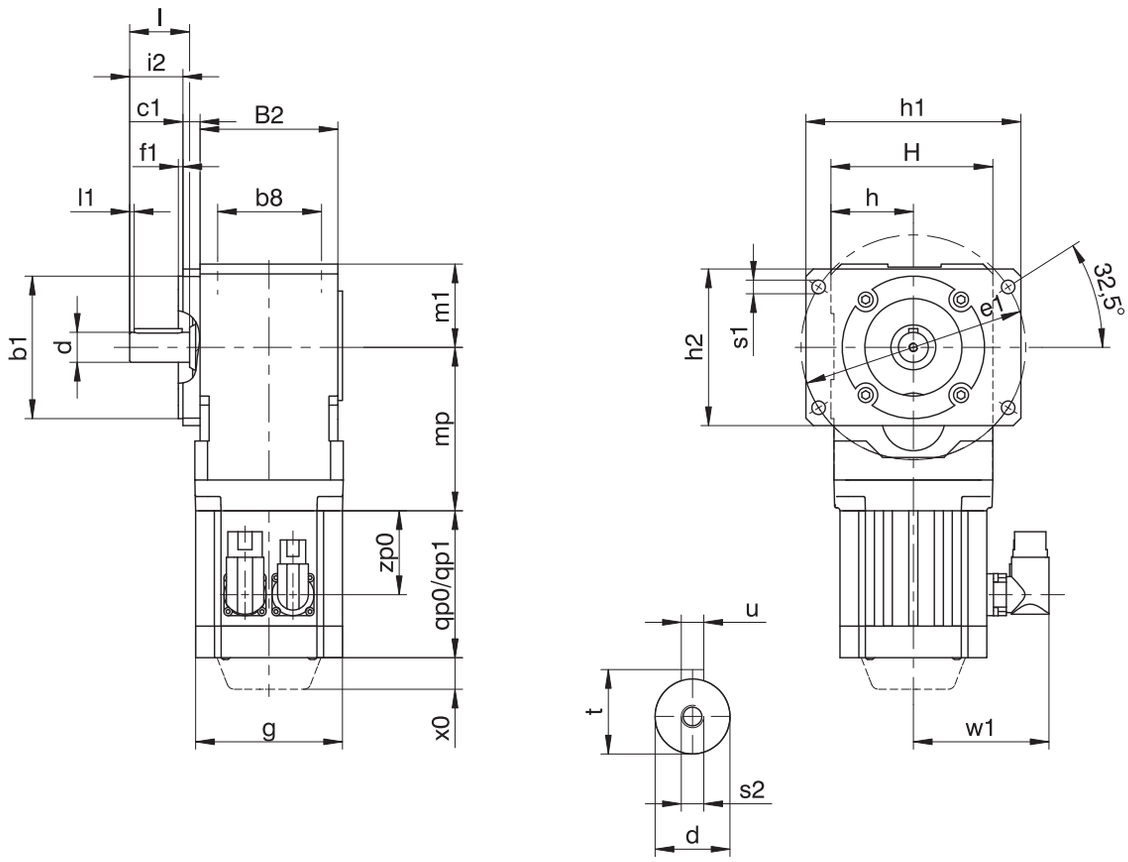

qp0	Applies to motors without brake.	qp1	Applies to motors with brake.
x0	Applies to encoders using an optical measuring method.	w1	Different for the One Cable Solution (OCS), see the chapter [▸ 17.4]

Dimensions of gear units

Type	Øb1	b8	B2	c1	Ød	Øe1	f1	h	h1	h2	H	i2	l	l1	m1	Øs1	s2	t	u
KL1	60_{j6}	50	75	11.5	16_{k6}	130	3	46	128.5	88.5	90	26.5	32	3	46	9	M5	18.0	A5×5×22
KL2	95_{j6}	65	92	11.5	20_{k6}	150	3	55	143.5	104.5	108	35.5	40	3	55	9	M6	22.5	A6×6×32

Dimensions of motors

Type	□g	qp0	qp1	w1	x0	zp0
EZ301U	72	90	130.0	55.5	21	54.5
EZ302U	72	112	152.0	55.5	21	76.5
EZ303U	72	134	174.0	55.5	21	98.5
EZ401U	98	98	146.5	91.0	22	56.0
EZ402U	98	123	171.5	91.0	22	81.0
EZ404U	98	173	221.5	91.0	22	131.0

Dimensions of geared motors

Type	EZ3	EZ4
	mp	mp
KL102	95.5	–
KL202	112.5	109.0

15.3.10 S shaft design (hollow shaft with shrink disk), G housing design (pitch circle diameter)

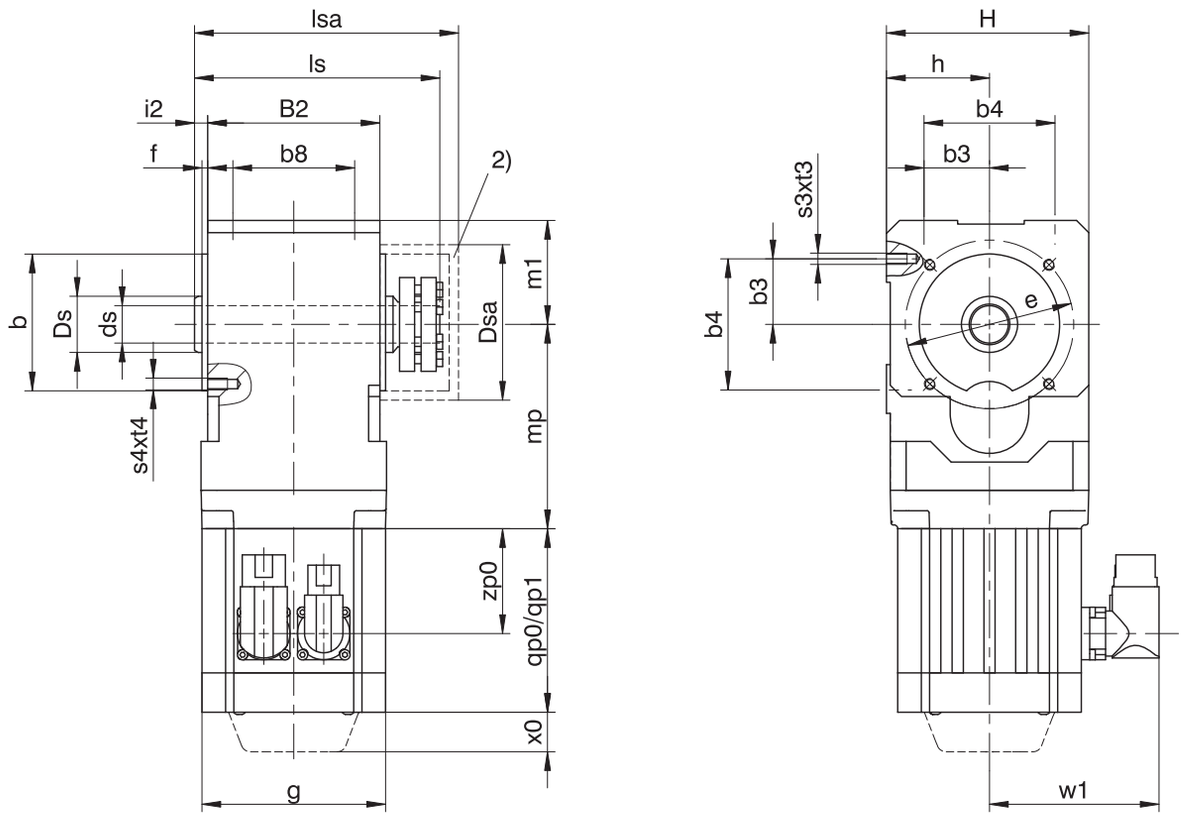

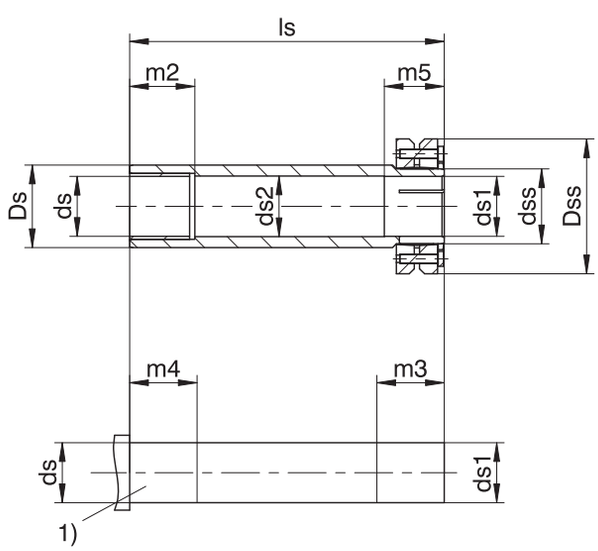

qp0	Applies to motors without brake.	qp1	Applies to motors with brake.
x0	Applies to encoders using an optical measuring method.	w1	Different for the One Cable Solution (OCS), see the chapter [▸ 17.4]
1)	Machine shaft: The dimension ls must meet or exceed the specified value.	2)	Cover (optional)

Dimensions of gear units

Type	Øb	b3	b4	b8	B2	Øds	Øds1	Øds2	Ødss	ØDs	ØDsa	ØDss	Øe	f	h	H	i2	ls	lsa	m1	m2	m3	m4	m5	s3	s4	t3	t4
KL1	60_{j6}	27.5	55	50	75	16^{H7}	$16_{h6}{}^{H7}$	17.5	20	25	64	46.2	75	3	46	90	6	109	114.5	46	17	22	28	23	M6	M6	11	11
KL2	75_{j6}	35.0	70	65	92	20^{H7}	$20_{h6}{}^{H7}$	21.5	24	30	79	50.0	90	3	55	108	7	131	139.0	55	22	27	31	26	M6	M6	13	13

Dimensions of motors

Type	□g	qp0	qp1	w1	x0	zp0
EZ301U	72	90	130.0	55.5	21	54.5
EZ302U	72	112	152.0	55.5	21	76.5
EZ303U	72	134	174.0	55.5	21	98.5
EZ401U	98	98	146.5	91.0	22	56.0
EZ402U	98	123	171.5	91.0	22	81.0
EZ404U	98	173	221.5	91.0	22	131.0

Dimensions of geared motors

Type	EZ3	EZ4
	mp	mp
KL102	95.5	–
KL202	112.5	109.0

15.3.11 S shaft design (hollow shaft with shrink disk), NG housing design (base + pitch circle diameter)

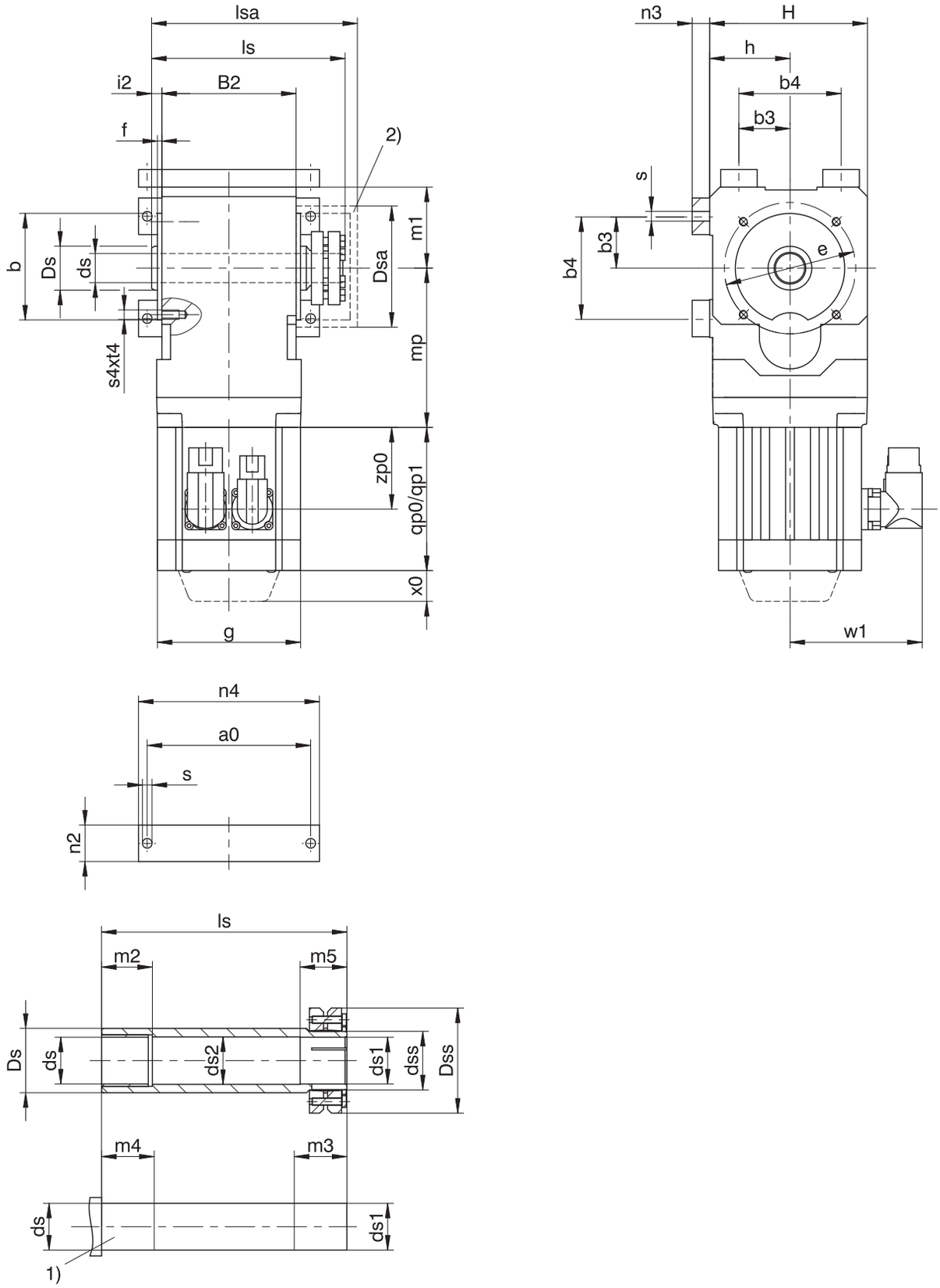

qp0	Applies to motors without brake.	qp1	Applies to motors with brake.
x0	Applies to encoders using an optical measuring method.	w1	Different for the One Cable Solution (OCS), see the chapter [▸ 17.4]
1)	Machine shaft: The dimension ls must meet or exceed the specified value.	2)	Cover (optional)

Dimensions of gear units

Type	a0	Øb	b3	b4	B2	Øds	Øds1	Øds2	Ødss	ØDs	ØDsa	ØDss	Øe	f	h	H	i2	ls	lsa	m1	m2	m3	m4	m5	n2	n3	n4	Øs	s4	t4
KL1	95	60_{j6}	27.5	55	75	16^{H7}	16_{h6}^{H7}	17.5	20	25	64	46.2	75	3	46	90	6	109	114.5	46	17	22	28	23	20	12	107	6.6	M6	11
KL2	112	75_{j6}	35.0	70	92	20^{H7}	20_{h6}^{H7}	21.5	24	30	79	50.0	90	3	55	108	7	131	139.0	55	22	27	31	26	25	12	124	6.6	M6	13

Dimensions of motors

Type	□g	qp0	qp1	w1	x0	zp0
EZ301U	72	90	130.0	55.5	21	54.5
EZ302U	72	112	152.0	55.5	21	76.5
EZ303U	72	134	174.0	55.5	21	98.5
EZ401U	98	98	146.5	91.0	22	56.0
EZ402U	98	123	171.5	91.0	22	81.0
EZ404U	98	173	221.5	91.0	22	131.0

Dimensions of geared motors

Type	EZ3	EZ4
	mp	mp
KL102	95.5	–
KL202	112.5	109.0

15.3.12 S shaft design (hollow shaft with shrink disk), F housing design (flange)

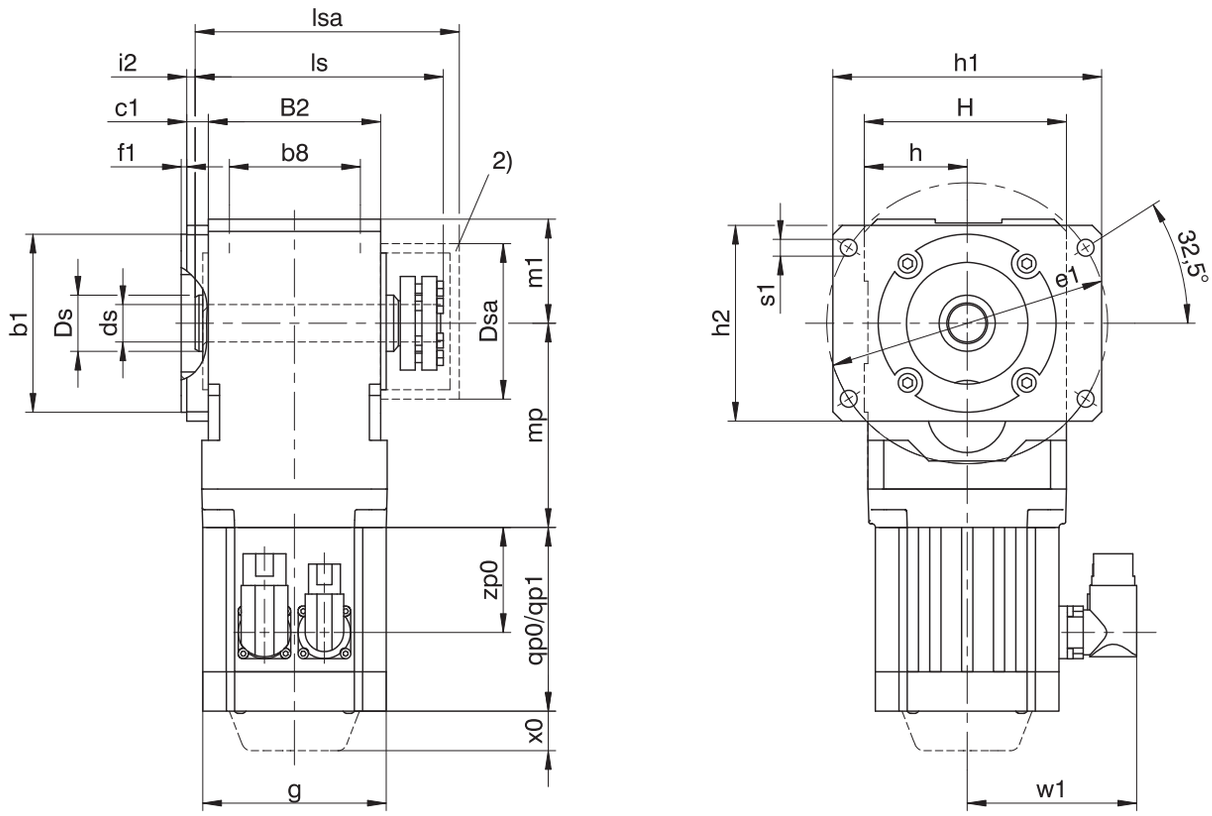

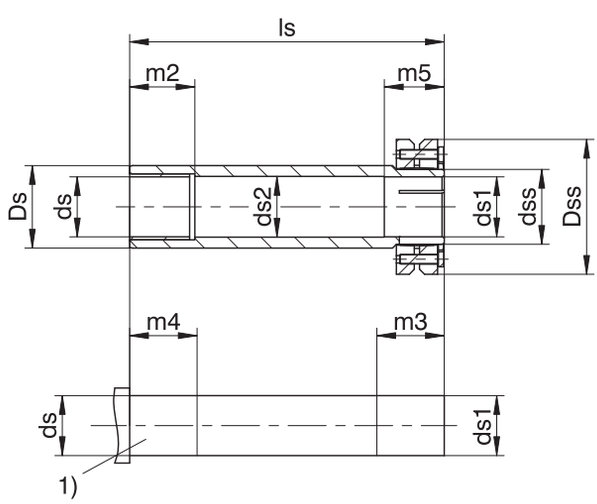

qp0	Applies to motors without brake.	qp1	Applies to motors with brake.
x0	Applies to encoders using an optical measuring method.	w1	Different for the One Cable Solution (OCS), see the chapter [▸ 17.4]
1)	Machine shaft: The dimension ls must meet or exceed the specified value.	2)	Cover (optional)

Dimensions of gear units

Type	Øb1	b8	B2	c1	Øds	Øds1	Øds2	Ødss	ØDs	ØDsa	ØDss	Øe1	f1	h	h1	h2	H	i2	ls	lsa	m1	m2	m3	m4	m5	Øs1
KL1	60_{j6}	50	75	11.5	16^{H7}	$16_{h6}{}^{H7}$	17.5	20	25	64	46.2	130	3	46	128.5	88.5	90	5.5	109	114.5	46	17	22	28	23	9
KL2	95_{j6}	65	92	11.5	20^{H7}	$20_{h6}{}^{H7}$	21.5	24	30	79	50.0	150	3	55	143.5	104.5	108	4.5	131	139.0	55	22	27	31	26	9

Dimensions of motors

Type	□g	qp0	qp1	w1	x0	zp0
EZ301U	72	90	130.0	55.5	21	54.5
EZ302U	72	112	152.0	55.5	21	76.5
EZ303U	72	134	174.0	55.5	21	98.5
EZ401U	98	98	146.5	91.0	22	56.0
EZ402U	98	123	171.5	91.0	22	81.0
EZ404U	98	173	221.5	91.0	22	131.0

Dimensions of geared motors

Type	EZ3	EZ4
	mp	mp
KL102	95.5	–
KL202	112.5	109.0

15.4 Type designation

This chapter shows you an explanation of the type designation with the associated options.

Additional ordering information not included in the type designation can be found at the end of the chapter.

Example code

KL	2	0	2	P	G	0080	EZ401U

Explanation

Code	Designation	Design
KL	Type	Helical bevel gear unit
2	Size	2 (example)
0	Generation	Generation 0
2	Stages	Two-stage
A	Shaft	Hollow shaft with keyway
S		Hollow shaft with shrink ring
G		Solid shaft without feather key
P		Solid shaft with feather key
G	Housing	Pitch circle diameter
F		Flange
NG		Foot + pitch circle diameter
0080	Transmission ratio (i x 10)	i = 8 (example)
EZ401U	Motor	EZ synchronous servo motor

To complete the type designation, also specify the following in your order:

- A detailed type designation of the motor, see the chapter [▸ 17]
- Attachment of solid shaft: gear unit side 3 or 4; solid shaft on both sides
- Attachment of hollow shaft with keyway: insertion side 3 or 4
- Attachment of hollow shaft with shrink ring: shrink ring on gear unit side 3 or 4
- Attachment of foot plates: gear unit side 1 or 5
- Attachment of flange: gear unit side 3 or 4
- Pitch circle diameter: gear unit side 3 or 4
- The position of the plug connectors, see the chapter [▸ 15.5.7]

An explanation of the gear unit sides can be found in the chapter [▸ 15.5.5].

15.4.1 Nameplate

An example gear unit nameplate is explained in the figure below.

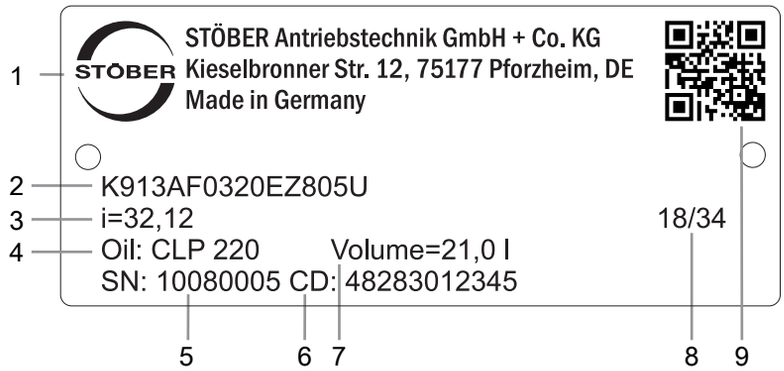

Code	Designation
1	Name of manufacturer
2	Type designation
3	Gear ratio of the gear unit
4	Lubricant specification
5	Serial number of the gear unit
6	Customer-specific data
7	Lubricant fill volume
8	Date of manufacture (year/calendar week)
9	QR code (link to product information)

15.4.1.1 Supporting documents

You can view or download supporting documents for the product by reading off the serial number on the nameplate of the product and entering it at the following address online:
https://id.stober.com

Alternatively, you can use a suitable mobile device to scan in the QR code on the nameplate of the product in order to be linked to the supporting documents.

15.5 Product description

15.5.1 Input options

EZ synchronous servo motor

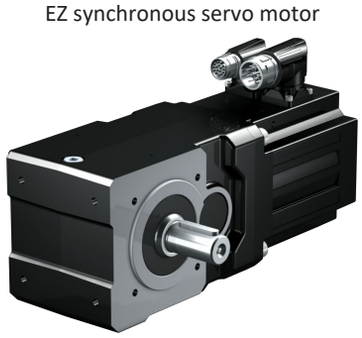

http://www.stoeber.de/en/KLEZ

LM Lean motor

http://www.stoeber.de/en/KLLM

15.5.2 Housing design

Pitch circle diameter G	Flange F	Foot + pitch circle diameter NG
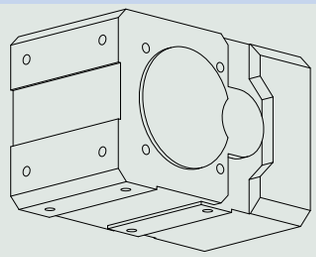	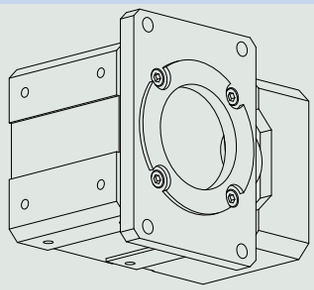	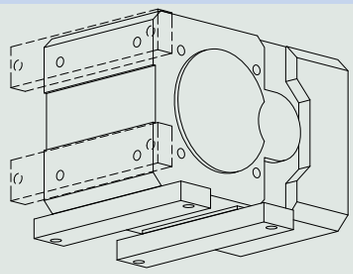

	G	F	NG
KL1	✓	✓	✓
KL2	✓	✓	✓

15.5.3 Combinatorial shaft/housing design

	Housing design			
Shaft design	**Code**	**G**	**F**	**NG**
Hollow shaft with keyway	**A**	AG	AF	ANG
Hollow shaft with shrink ring	**S**	SG	SF	SNG
Solid shaft without feather key	**G**	GG	GF	GNG
Solid shaft with feather key	**P**	PG	PF	PNG

15.5.4 Installation conditions

Hollow shaft

The hollow shaft hole tolerance is ISO H7. The tolerance of the machine shaft must be ISO k6.

Take care to align the machine shaft with the gear unit hollow shaft when attaching the gear unit.

Maximum deviation ≤ 0.03 mm.

For simpler assembly and disassembly of the machine shaft, the hollow shafts are equipped with a spiral groove (as a grease deposit).

A hardened, threaded keeper plate is included in the scope of delivery. You also have the option to order the hollow shaft without a keeper plate.

Hollow shaft with shrink ring

The tolerance of the hollow shaft hole is ISO H7.

The machine shaft must be ISO h9.

Select a material for the machine shaft with a permitted surface pressure of $p \geq 325\ N/mm^2$.

Possible materials:

- C45E +QT
- 42CrMo4

Fastening the gear units on the machine side using the pitch circle diameter

The specified torques and forces only apply when gear units are fastened on the machine side using screws of strength class 10.9. In addition, the gear housings must be adjusted at the pilot. The machine-side fit must be H7.

15.5.5 Gear unit sides

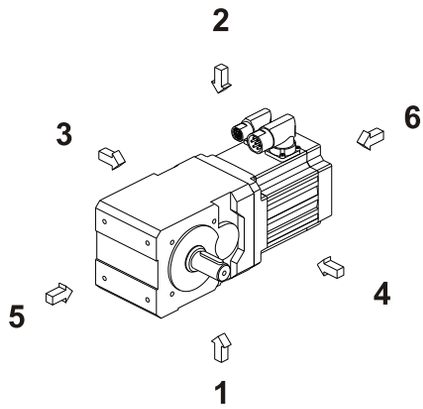

The numbers identify the gear unit sides.

15.5.6 Lubricants

STOBER fills the gear units with the amount and type of lubricant specified on the nameplate.

You will receive lubricants for use in the food industry upon request.

15.5.7 Position of the plug connectors

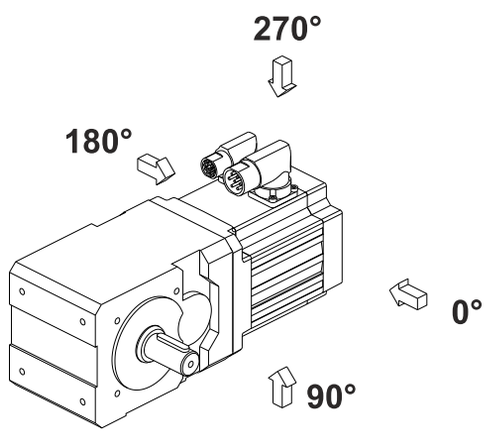

In the standard version, the plug connectors are attached in the 270° position.

Indicate variations for your geared motor in the order.

15.5.8 Other product features

Feature	Value
Max. permitted gear unit temperature (on the surface of the gear unit)	≤ 80 °C
Paint	Black RAL 9005
Explosion-proof design in accordance with (ATEX) Directive 2014/34/EU (optional)	Not available
Efficiency: η_{get} two-stage	 97%
Protection class:[1] Gear unit Motor	 IP65 IP56, optionally IP66

[1] Observe the protection class of all the components.

15.5.9 Direction of rotation

Solid shaft (P and G), solid shaft on both sides (P and G), hollow shaft with keyway (A)

Output side 4	Output side 3
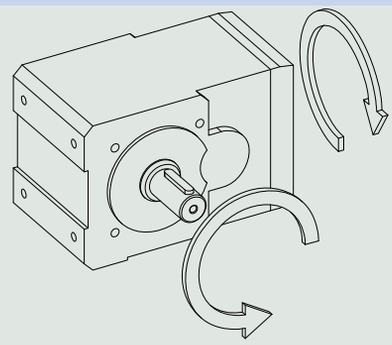	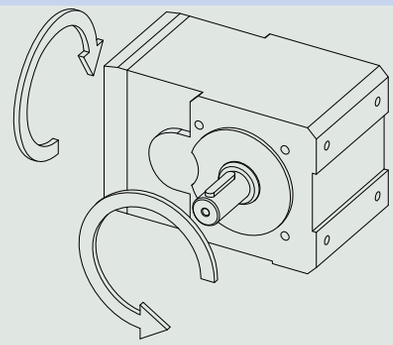

The specified directions of rotation also apply to gear units with hollow shaft (A) if the entry side of the machine shaft corresponds to the side of the solid shaft that is shown.

The direction of rotation for the shaft design of a solid shaft on both sides corresponds to the direction of rotation for output side 4.

The pictures show mounting position EL1.

Hollow shaft with shrink ring (S)

Shrink ring side 4	Shrink ring side 3
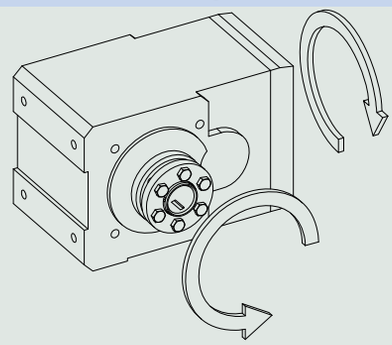	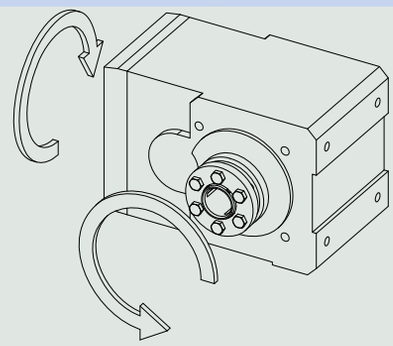

The pictures show mounting position EL1.

15.6 Project configuration

Project your drives using our SERVOsoft designing software. Download SERVOsoft for free at https://www.stoeber.de/en/ServoSoft.

Observe the limit conditions in this chapter to ensure a safe design for your drives.

An explanation of the formula symbols can be found in Chapter [▸ 23.1].

The formula symbols for values actually present in the application are marked with *.

15.6.1 Calculation of the operating point

Check the following conditions for operating points other than the nominal point M_{2N} specified in the selection tables.

$$n_{1m^*} \leq \frac{n_{1maxDB}}{fB_T}$$

$$n_{1max^*} \leq \frac{n_{1max\,ZB}}{fB_T}$$

$$M_{2eff^*} \leq M_{2th}$$

$$M_{2acc^*} \leq \frac{M_{2acc}}{fB_{ZB}}$$

$$M_{2NOT*} \leq M_{2NOT}$$

$$M_{2eq*} \leq M_{2N} \cdot \frac{S}{fB_{op} \cdot fB_t}$$

The values for n_{1maxDB}, n_{1maxZB}, M_{2acc}, M_{2NOT}, M_{2N} and S can be found in the selection tables.

The values for fB_T, fB_{op}, fB_t and fB_{ZB} can be found in the corresponding tables in this chapter.

Calculate the thermal limit torque M_{2th} for a duty cycle > 50%.

Example of cyclic operation

The following calculations are based on a representation of the power taken from the output based in accordance with the following example:

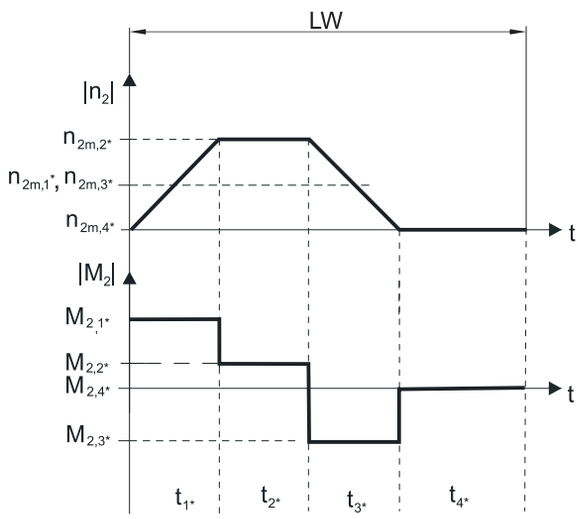

Calculation of the actual average input speed

$$n_{1m*} = n_{2m*} \cdot i$$

$$n_{2m*} = \frac{|n_{2m,1*}| \cdot t_{1*} + \ldots + |n_{2m,n*}| \cdot t_{n*}}{t_{1*} + \ldots + t_{n*}}$$

If $t_{1*} + \ldots + t_{3*} \geq 6$ min, calculate n_{2m*} without the rest phase t_{4*}.

The values for the ratio i can be found in the selection tables.

Calculation of the actual effective torque

$$M_{2eff*} = \sqrt{\frac{t_{1*} \cdot M_{2,1*}^{\ 2} + \ldots + t_{n*} \cdot M_{2,n*}^{\ 2}}{t_{1*} + \ldots + t_{n*}}}$$

Calculation of the actual equivalent torque

$$M_{2eq*} = \sqrt[3]{\frac{|n_{2m,1*}| \cdot t_{1*} \cdot |M_{2,1*}^{\ 3}| + \ldots + |n_{2m,n*}| \cdot t_{n*} \cdot |M_{2,n*}^{\ 3}|}{|n_{2m,1*}| \cdot t_{1*} + \ldots + |n_{2m,n*}| \cdot t_{n*}}}$$

Calculation of the thermal limit torque

Calculate the thermal limit torque M_{2th} for a duty cycle ED_{10} > 50% and the actual average input speed n_{1m*}. (At $K_{mot,th} \leq 0$ you must reduce the average input speed n_{1m*} accordingly or select another geared motor size.)

$$M_{2th} = M_{op} \cdot i \cdot K_{mot,th}$$

$$K_{mot,th} = 0{,}9 - \frac{a_{th}}{1000} \cdot fB_T \cdot \left(\frac{n_{1m*}}{1000}\right)^2$$

The values for i and a_{th} can be found in the selection tables.

The values for fB_T can be found in the corresponding table in this chapter.

The value for the torque of the motor at operating point M_{op} with the determined average input speed n_{1m*} can be found in the motor curve of Chapter [▸ 17.3]. Note the size, nominal speed n_N and cooling type of the motor. The figure below shows an example of reading the torque M_{op} of a motor with convection cooling at the operating point.

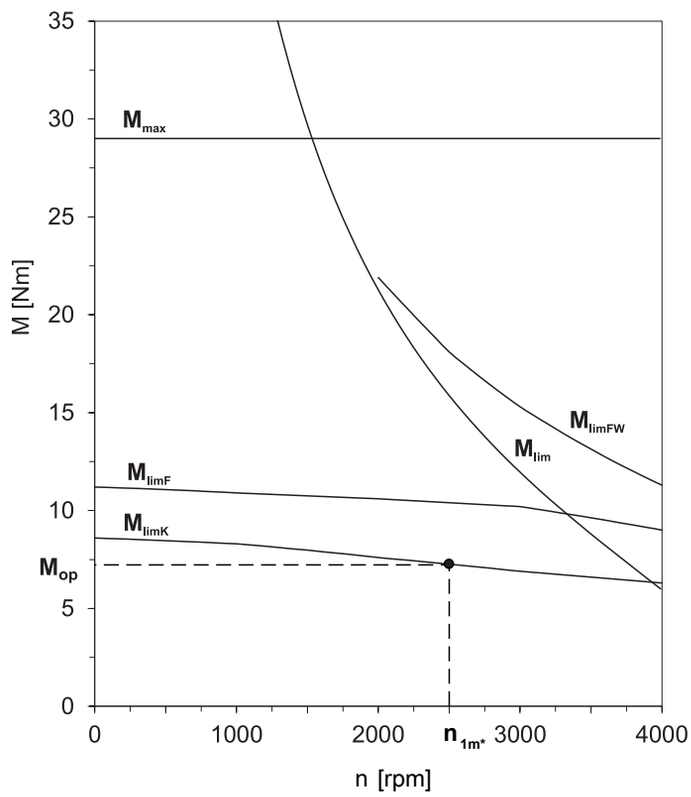

Operating mode	fB_{op}
Uniform continuous operation	1.00
Cyclic operation	1.25
Reversing load cyclic operation	1.40

Run time	fB_t
Daily runtime ≤ 8 h	1.00
Daily runtime ≤ 16 h	1.15
Daily runtime ≤ 24 h	1.20

Cyclic operation	fB_{ZB}
≤ 1000 load changes/hour (LW/h)	1.00
> 1000 load changes/hour (LW/h)	1.15

Temperature		fB_T
Motor cooling	**Surrounding temperature**	
Motor with forced ventilation	≤ 20 °C	0.9
	≤ 30 °C	1.0
	≤ 40 °C	1.15
Motor with convection cooling	≤ 20 °C	1.0
	≤ 30 °C	1.1
	≤ 40 °C	1.25

Notes

- The maximum permitted gear unit temperature (see the "Other product features" chapter) must not be exceeded. Doing so may result in damage to the geared motor.
- For braking from full speed (for example when the power fails or when setting up the machine), note the permitted gear unit torques (M_{2acc}, M_{2NOT}) in the selection tables.

15.6.2 Permitted shaft loads for the output shaft

The values specified in the tables apply to the permitted shaft loads:

- For shaft dimensions in accordance with the catalog
- For output speeds $n_{2m*} \leq 100$ rpm ($F^{2axN} = F_{2ax100}$; $F_{2radN} = F_{2rad100}$; $M_{2kN} = M_{2k100}$)
- Only if radial forces on the gear unit are stabilized by its pilots for the pitch circle diameter and flange housing design

15.6.2.1 G and P shaft designs

Permitted shaft loads for G and P shaft designs (solid shaft)

Type	z_2 [mm]	F_{2ax100} [N]	$F_{2rad100}$ [N]	$F_{2rad,acc}$ [N]	M_{2k100} [Nm]	$M_{2k,acc}$ [Nm]
KL1	20.0	380	1900	1900	68	68
KL2	22.0	560	2800	2800	118	118

For other output speeds, download diagrams at http://configurator.stoeber.de.

The following applies to output speeds n_{2m*} > 100 rpm:

$$F_{2axN} = \frac{F_{2ax100}}{\sqrt[3]{\frac{n_{2m*}}{100\ \text{rpm}}}} \qquad F_{2radN} = \frac{F_{2rad100}}{\sqrt[3]{\frac{n_{2m*}}{100\ \text{rpm}}}} \qquad M_{2kN} = \frac{M_{2k100}}{\sqrt[3]{\frac{n_{2m*}}{100\ \text{rpm}}}}$$

The values for F_{2ax100}, $F_{2rad100}$ and M_{2k100} can be found in the table "Permitted shaft loads" in this chapter.

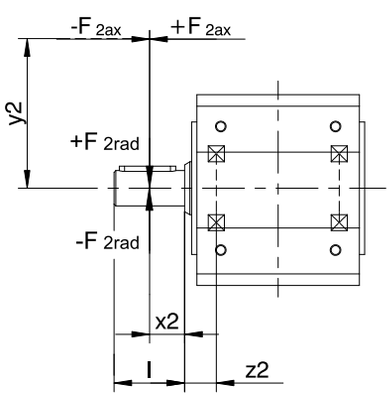

Fig. 1: Force application points for solid shaft

The specified values for $F_{2rad100}$ refer to force application on the center of the output shaft: $x_2 = l/2$.

Shaft dimensions can be found in the "Dimensional drawings" chapter.

The following applies to other force application points:

$$M_{2k*} = \frac{2 \cdot F_{2ax*} \cdot y_2 + F_{2rad*} \cdot (x_2 + z_2)}{1000} \leq M_{2kN}$$

$$F_{2rad*} \leq F_{2radN}$$

$$F_{2ax*} \leq F_{2axN}$$

For applications with multiple axial and/or radial forces, you must add the forces as vectors.

In the event of EMERGENCY OFF operation (max. 1000 load changes), you can multiply the permitted forces and torques for F_{2ax20}, F_{2rad20} and M_{2k20} by a factor of two.

15.6.2.2 A and S shaft design

Permitted shaft loads for A shaft design (hollow shaft with keyway)

Type	z_2 [mm]	F_{2ax100} [N]	$F_{2rad100}$ [N]	$F_{2rad,acc}$ [N]	M_{2k100} [Nm]	$M_{2k,acc}$ [Nm]
KL1	18.5	250	1250	1250	43	43
KL2	22.0	560	2800	2800	118	118

Permitted shaft loads for S shaft design (hollow shaft with shrink ring)

Type	z_2 [mm]	F_{2ax100} [N]	$F_{2rad100}$ [N]	$F_{2rad,acc}$ [N]	M_{2k100} [Nm]	$M_{2k,acc}$ [Nm]
KL1	18.5	250	1250	1250	43	43
KL2	22.0	560	2800	2800	118	118

For other output speeds, download diagrams at http://configurator.stoeber.de.

The following applies to output speeds n_{2m*} > 100 rpm:

$$F_{2axN} = \frac{F_{2ax100}}{\sqrt[3]{\frac{n_{2m*}}{100\ \text{rpm}}}} \qquad F_{2radN} = \frac{F_{2rad100}}{\sqrt[3]{\frac{n_{2m*}}{100\ \text{rpm}}}} \qquad M_{2kN} = \frac{M_{2k100}}{\sqrt[3]{\frac{n_{2m*}}{100\ \text{rpm}}}}$$

The values for F_{2ax100}, $F_{2rad100}$ and M_{2k100} can be found in the table "Permitted shaft loads" in this chapter.

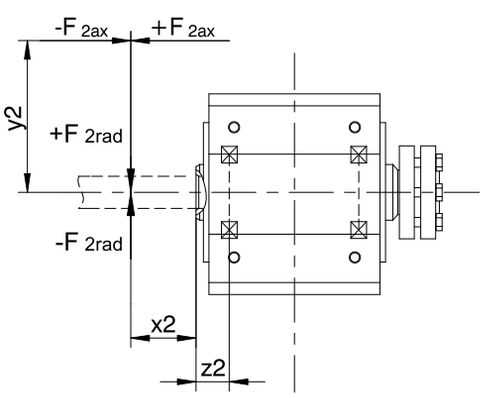

Fig. 2: Force application points for hollow shaft

You can determine the permitted radial forces from the permitted breakdown torque M_{2kN}. The actual radial forces may not exceed the permitted radial forces. The permitted radial forces pertain to the shaft end (x2 = 0).

$$M_{2k*} = \frac{2 \cdot F_{2ax*} \cdot y_2 + F_{2rad*} \cdot (x_2 + z_2)}{1000} \leq M_{2kN}$$

$$F_{2ax*} \leq F_{2axN}$$

For applications with multiple axial and/or radial forces, you must add the forces as vectors.

In the event of EMERGENCY OFF operation (max. 1000 load changes), you can multiply the permitted forces and torques for F_{2ax20}, F_{2rad20} and M_{2k20} by a factor of two.

15.6.3 Radial shaft seal rings

Leak-proofness

Our gear units are equipped with high-quality radial shaft seal rings and checked for leaks. However, a leak cannot be fully ruled out over the length of use of a gear unit. If you use a gear unit with goods incompatible with the lubricant, you must take measures to prevent direct contact with the gear unit lubricant in case of a leak.

15.7 Additional documentation

Additional documentation related to the product can be found at
http://www.stoeber.de/en/downloads/

Enter the ID of the documentation in the Search... field.

Documentation	ID
Operating manual for KL/KS/PHK/PHKX/PHQK/PK/PKX right-angle servo gear units and right-angle servo geared motors	443150_en

16 K helical bevel geared motors

Table of contents

16.1 Overview ... 426

16.2 Selection tables ... 427

16.3 Dimensional drawings ... 449

16.3.1 A shaft design (hollow shaft), G housing design (pitch circle diameter) ... 450

16.3.2 A shaft design (hollow shaft), NG housing design (base + pitch circle diameter) ... 452

16.3.3 A shaft design (hollow shaft), GD housing design (pitch circle diameter + torque arm bracket) ... 454

16.3.4 A shaft design (hollow shaft), NGD housing design (foot + pitch circle diameter + torque arm bracket) ... 458

16.3.5 A shaft design (hollow shaft), F housing design (round flange) ... 460

16.3.6 A shaft design (hollow shaft), NF housing design (base + round flange) ... 464

16.3.7 S shaft design (hollow shaft with shrink disk), G housing design (pitch circle diameter) ... 468

16.3.8 S shaft design (hollow shaft with shrink disk), NG housing design (base + pitch circle diameter) ... 470

16.3.9 S shaft design (hollow shaft with shrink ring), GD housing design (pitch circle diameter + torque arm bracket) ... 474

16.3.10 S shaft design (hollow shaft with shrink ring), NGD housing design (foot + pitch circle diameter + torque arm bracket) ... 478

16.3.11 S shaft design (hollow shaft with shrink disk), F housing design (round flange) ... 480

16.3.12 S shaft design (hollow shaft with shrink disk), NF housing design (base + round flange) ... 484

16.3.13 A shaft design (solid shaft), G housing design (pitch circle diameter) ... 488

16.3.14 V shaft design (solid shaft), NG housing design (base + pitch circle diameter) ... 490

16.3.15 V shaft design (solid shaft), F housing design (round flange) ... 492

16.3.16 V shaft design (solid shaft), NF housing design (base + round flange) ... 494

16.3.17 Oil expansion tank ... 496

16.4 Type designation ... 497

16.4.1 Nameplate ... 498

16.5 Product description ... 498

16.5.1 Input options ... 498

16.5.2 Housing design ... 499

16.5.3 Combinatorial shaft/housing design ... 500

16.5.4 Installation conditions ... 500

16.5.5 Mounting positions ... 501

16.5.6 Lubricants ... 502

16.5.7 Position of the plug connectors ... 503

16.5.8 Other product features ... 503

16.5.9 Maintenance ... 503

16.5.10 Direction of rotation ... 504

16.6 Project configuration ... 505

16.6.1 Calculation of the operating point ... 505

16.6.2 Permitted shaft loads for the output shaft ... 508

16.6.3 Radial shaft seal rings ... 510

16.6.4 Oil expansion tank ... 510

16.7 Additional documentation ... 511

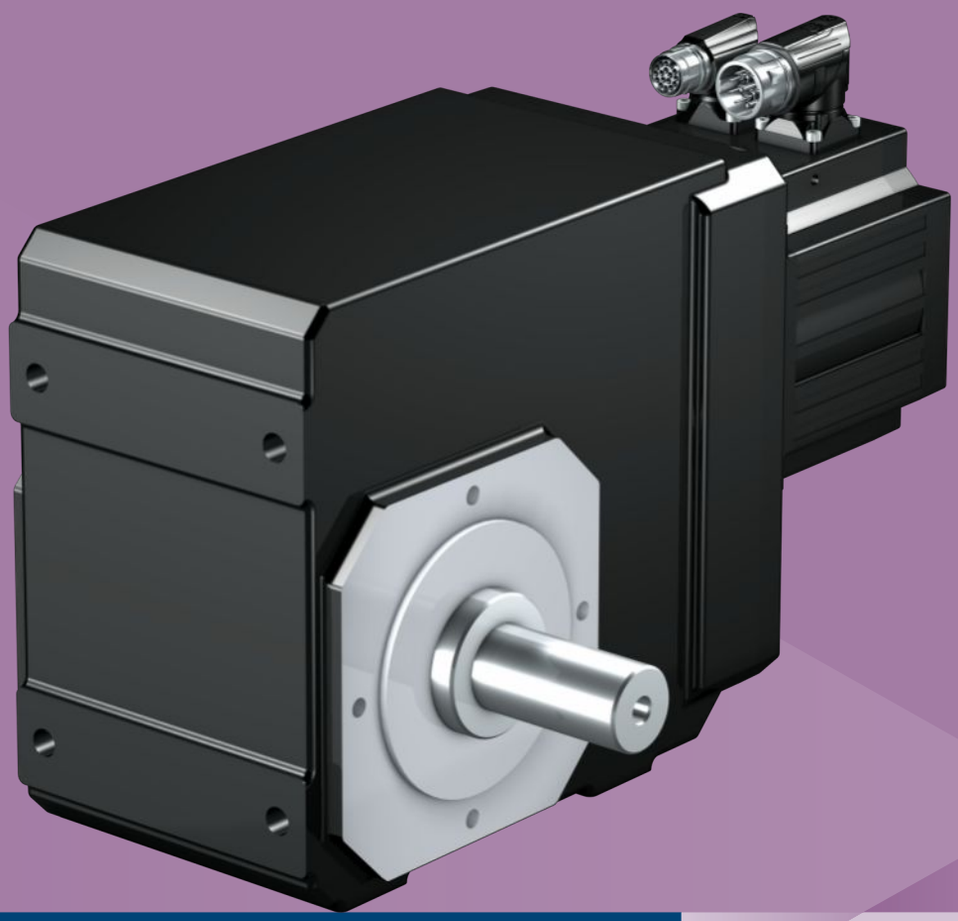

16 Helical bevel geared motors K

16.1 Overview

Highly rigid helical-geared right-angle geared motor

Features

Power density	★★☆☆☆
Backlash	★★★☆☆
Price category	€€
Shaft load	★★★☆☆
Smooth operation	★★★☆☆
Torsional stiffness	★★☆☆☆
Mass moment of inertia	★★★★★
Helical gearing	✓
Maintenance-free (K1 – K4)	✓
FKM seal ring at the input	✓
Reinforced output bearing (K5 – K8)	✓ (on request)
Compact and highly dynamic due to direct motor attachment	✓

Key ★☆☆☆☆ good | ★★★★★ excellent
€ Economy | €€€€€ Premium

Technical data

i	4 – 381
M_{2acc}	23 – 13200 Nm
$\Delta\phi_2$	1.5 – 12 arcmin
η_{get}	94 – 97 %

16.2 Selection tables

The technical data specified in the selection tables applies to:

- Installation altitudes up to 1000 m above sea level
- Surrounding temperatures from 0 °C to 40 °C
- Drives with convection-cooled motors (e.g. EZ401**U**)
- Weight specification for mounting position EL1, housing design G

For the technical data on drives with forced ventilated motors (e.g. EZ401**B**), refer to http://configurator.stoeber.de.

An explanation of the formula symbols can be found in Chapter [▶ 23.1].

n_{2N} [rpm]	M_{2N} [Nm]	$M_{2,0}$ [Nm]	a_{th}	S	Type	M_{2acc} [Nm]	M_{2NOT} [Nm]	i	i_{exakt}	n_{1maxDB} EL1,2 [rpm]	n_{1maxDB} EL3,4,5,6 [rpm]	n_{1maxZB} [rpm]	J_1 [kgcm²]	$\Delta\varphi_2$ [arcmin]	$\Delta\varphi_{2redII}$ [arcmin]	$\Delta\varphi_{2redI}$ [arcmin]	C_2 [Nm/arcmin]	m [kg]
K1 (n_{1N} = 3000 rpm, $M_{2acc,max}$ = 140 Nm)																		
53	51	52	6.5	1.7	K102_0560 EZ301U	100	170	56.10	1178/21	4000	4000	7000	0.21	12	6.0	–	6.8	11
64	42	43	5.2	2.4	K102_0470 EZ301U	120	200	46.92	2299/49	4000	4000	7000	0.22	12	6.0	–	6.8	11
64	72	76	8.9	1.4	K102_0470 EZ302U	120	200	46.92	2299/49	4000	4000	7000	0.32	12	6.0	–	6.8	12
74	36	37	8.3	1.7	K102_0400 EZ301U	74	120	40.30	403/10	4000	4000	7000	0.21	12	6.0	–	6.8	11
85	32	32	4.6	3.4	K102_0350 EZ301U	95	200	35.11	3686/105	4000	4000	7000	0.23	12	6.0	–	6.8	11
85	54	57	7.9	2.0	K102_0350 EZ302U	140	200	35.11	3686/105	4000	4000	7000	0.33	12	6.0	–	6.8	12
85	70	75	10	1.5	K102_0350 EZ303U	140	200	35.11	3686/105	4000	4000	7000	0.44	12	6.0	–	6.8	12
85	95	102	14	1.1	K102_0350 EZ401U	140	240	35.11	3686/105	4000	4000	7000	0.97	12	6.0	–	6.8	14
89	30	31	6.7	2.4	K102_0340 EZ301U	88	150	33.71	4719/140	4000	4000	7000	0.22	12	6.0	–	6.8	11
89	52	55	11	1.4	K102_0340 EZ302U	88	150	33.71	4719/140	4000	4000	7000	0.32	12	6.0	–	6.8	12
107	25	26	4.7	3.9	K102_0280 EZ301U	76	170	28.05	589/21	4000	4000	7000	0.25	12	6.0	–	6.8	11
107	43	46	8.1	2.3	K102_0280 EZ302U	130	170	28.05	589/21	4000	4000	7000	0.35	12	6.0	–	6.8	12
107	56	60	11	1.8	K102_0280 EZ303U	130	170	28.05	589/21	4000	4000	7000	0.46	12	6.0	–	6.8	12
107	76	82	14	1.3	K102_0280 EZ401U	140	240	28.05	589/21	4000	4000	7000	0.99	12	6.0	–	6.8	14
119	23	23	4.8	4.2	K102_0250 EZ301U	68	140	25.22	1261/50	4000	4000	7000	0.24	12	6.0	–	6.8	11
119	39	41	8.1	2.5	K102_0250 EZ302U	110	140	25.22	1261/50	4000	4000	7000	0.34	12	6.0	–	6.8	12
119	51	54	11	1.9	K102_0250 EZ303U	110	140	25.22	1261/50	4000	4000	7000	0.45	12	6.0	–	6.8	12
119	68	73	14	1.4	K102_0250 EZ401U	120	190	25.22	1261/50	4000	4000	7000	0.98	12	6.0	–	6.8	14
129	21	21	4.8	4.4	K102_0230 EZ301U	63	160	23.27	1140/49	4000	4000	7000	0.28	12	6.0	–	6.8	11
129	36	38	8.2	2.6	K102_0230 EZ302U	110	160	23.27	1140/49	4000	4000	7000	0.38	12	6.0	–	6.8	12
129	47	49	11	2.0	K102_0230 EZ303U	130	160	23.27	1140/49	4000	4000	7000	0.49	12	6.0	–	6.8	12
129	63	68	14	1.5	K102_0230 EZ401U	140	240	23.27	1140/49	4000	4000	7000	1.0	12	6.0	–	6.8	14
149	18	19	4.9	4.9	K102_0200 EZ301U	55	120	20.15	403/20	4000	4000	7000	0.26	12	6.0	–	6.8	11
149	31	33	8.3	2.9	K102_0200 EZ302U	97	120	20.15	403/20	4000	4000	7000	0.36	12	6.0	–	6.8	12
149	40	43	11	2.2	K102_0200 EZ303U	97	120	20.15	403/20	4000	4000	7000	0.47	12	6.0	–	6.8	12
149	55	59	15	1.6	K102_0200 EZ401U	130	220	20.15	403/20	4000	4000	7000	1.0	12	6.0	–	6.8	14
149	84	92	22	1.1	K102_0200 EZ501U	130	220	20.15	403/20	4000	4000	7000	3.0	12	6.0	–	6.8	15
171	27	29	8.4	3.1	K102_0175 EZ302U	85	130	17.56	2090/119	4000	4000	6000	0.42	12	6.0	–	6.8	12
171	35	37	11	2.4	K102_0175 EZ303U	100	130	17.56	2090/119	4000	4000	6000	0.53	12	6.0	–	6.8	12
171	48	51	15	1.8	K102_0175 EZ401U	140	240	17.56	2090/119	4000	4000	6000	1.1	12	6.0	–	6.8	14
171	73	80	23	1.2	K102_0175 EZ501U	140	240	17.56	2090/119	4000	4000	6000	3.0	12	6.0	–	6.8	15
171	80	89	25	1.1	K102_0175 EZ402U	140	240	17.56	2090/119	4000	4000	6000	1.8	12	6.0	–	6.8	15
179	26	27	8.4	3.2	K102_0165 EZ302U	81	110	16.71	117/7	4000	4000	7000	0.39	12	6.0	–	6.8	12
179	34	36	11	2.5	K102_0165 EZ303U	91	110	16.71	117/7	4000	4000	7000	0.50	12	6.0	–	6.8	12
179	45	49	15	1.8	K102_0165 EZ401U	130	220	16.71	117/7	4000	4000	7000	1.0	12	6.0	–	6.8	14
179	70	76	23	1.2	K102_0165 EZ501U	130	220	16.71	117/7	4000	4000	7000	3.0	12	6.0	–	6.8	15
179	76	84	25	1.1	K102_0165 EZ402U	130	220	16.71	117/7	4000	4000	7000	1.7	12	6.0	–	6.8	15
213	22	23	8.5	3.6	K102_0140 EZ302U	68	100	14.11	494/35	4000	4000	6000	0.47	12	6.0	–	6.8	12
213	28	30	11	2.8	K102_0140 EZ303U	82	100	14.11	494/35	4000	4000	6000	0.58	12	6.0	–	6.8	12
213	38	41	15	2.1	K102_0140 EZ401U	120	240	14.11	494/35	4000	4000	6000	1.1	12	6.0	–	6.8	14
213	59	64	23	1.3	K102_0140 EZ501U	140	240	14.11	494/35	4000	4000	6000	3.1	12	6.0	–	6.8	15
213	64	71	25	1.2	K102_0140 EZ402U	140	240	14.11	494/35	4000	4000	6000	1.8	12	6.0	–	6.8	15
238	19	21	8.9	3.8	K102_0125 EZ302U	61	92	12.62	429/34	4000	4000	6000	0.44	12	6.0	–	6.8	12
238	25	27	12	2.9	K102_0125 EZ303U	73	92	12.62	429/34	4000	4000	6000	0.55	12	6.0	–	6.8	12
238	34	37	15	2.2	K102_0125 EZ401U	100	220	12.62	429/34	4000	4000	6000	1.1	12	6.0	–	6.8	14
238	53	58	23	1.4	K102_0125 EZ501U	130	220	12.62	429/34	4000	4000	6000	3.1	12	6.0	–	6.8	15
238	58	64	25	1.3	K102_0125 EZ402U	130	220	12.62	429/34	4000	4000	6000	1.8	12	6.0	–	6.8	15
259	18	19	9.5	3.8	K102_0115 EZ302U	56	84	11.57	266/23	3600	3600	5500	0.53	12	6.0	–	6.8	12
259	23	25	12	2.9	K102_0115 EZ303U	67	84	11.57	266/23	3600	3600	5500	0.64	12	6.0	–	6.8	12
259	31	34	15	2.3	K102_0115 EZ401U	95	240	11.57	266/23	3600	3600	5500	1.2	12	6.0	–	6.8	14
259	48	53	23	1.5	K102_0115 EZ501U	140	240	11.57	266/23	3600	3600	5500	3.1	12	6.0	–	6.8	15

n_{2N} [rpm]	M_{2N} [Nm]	$M_{2,0}$ [Nm]	a_{th}	S	Type	M_{2acc} [Nm]	M_{2NOT} [Nm]	i	i_{exakt}	n_{1maxDB} EL1,2 [rpm]	n_{1maxDB} EL3,4,5,6 [rpm]	n_{1maxZB} [rpm]	J_1 [kgcm²]	$\Delta\varphi_2$ [arcmin]	$\Delta\varphi_{2redII}$ [arcmin]	$\Delta\varphi_{2redI}$ [arcmin]	C_2 [Nm/arcmin]	m [kg]
K1 (n_{1N} = 3000 rpm, $M_{2acc,max}$ = 140 Nm)																		
259	53	58	26	1.4	K102_0115 EZ402U	140	240	11.57	266/23	3600	3600	5500	1.9	12	6.0	–	6.8	15
296	16	17	10	3.8	K102_0100 EZ302U	49	74	10.14	507/50	4000	4000	6000	0.50	12	6.0	–	6.8	12
296	20	22	14	2.9	K102_0100 EZ303U	59	74	10.14	507/50	4000	4000	6000	0.61	12	6.0	–	6.8	12
296	28	30	15	2.6	K102_0100 EZ401U	84	220	10.14	507/50	4000	4000	6000	1.1	12	6.0	–	6.8	14
296	42	46	24	1.7	K102_0100 EZ501U	130	220	10.14	507/50	4000	4000	6000	3.1	12	6.0	–	6.8	15
296	46	51	26	1.5	K102_0100 EZ402U	130	220	10.14	507/50	4000	4000	6000	1.8	12	6.0	–	6.8	15
296	68	85	38	1.0	K102_0100 EZ404U	130	220	10.14	507/50	4000	4000	6000	3.2	12	6.0	–	6.8	17
324	14	15	11	3.8	K102_0092 EZ302U	45	67	9.249	1748/189	3600	3600	5500	0.62	12	6.0	–	6.8	12
324	19	20	15	2.9	K102_0092 EZ303U	54	67	9.249	1748/189	3600	3600	5500	0.73	12	6.0	–	6.8	12
324	25	27	16	2.7	K102_0092 EZ401U	76	240	9.249	1748/189	3600	3600	5500	1.3	12	6.0	–	6.8	14
324	39	42	24	1.8	K102_0092 EZ501U	130	240	9.249	1748/189	3600	3600	5500	3.2	12	6.0	–	6.8	15
324	42	47	26	1.6	K102_0092 EZ402U	130	240	9.249	1748/189	3600	3600	5500	2.0	12	6.0	–	6.8	15
324	62	77	38	1.1	K102_0092 EZ404U	130	240	9.249	1748/189	3600	3600	5500	3.3	12	6.0	–	6.8	17
324	66	72	41	1.0	K102_0092 EZ502U	130	240	9.249	1748/189	3600	3600	5500	5.5	12	6.0	–	6.8	16
324	66	74	41	1.0	K102_0092 EZ701U	130	240	9.249	1748/189	3600	3600	5500	8.8	12	6.0	–	6.8	18
361	13	14	12	3.8	K102_0083 EZ302U	40	60	8.309	1911/230	3600	3600	5500	0.58	12	6.0	–	6.8	12
361	17	18	16	2.9	K102_0083 EZ303U	48	60	8.309	1911/230	3600	3600	5500	0.69	12	6.0	–	6.8	12
361	23	24	16	2.9	K102_0083 EZ401U	69	220	8.309	1911/230	3600	3600	5500	1.2	12	6.0	–	6.8	14
361	35	38	24	1.9	K102_0083 EZ501U	120	220	8.309	1911/230	3600	3600	5500	3.2	12	6.0	–	6.8	15
361	38	42	26	1.7	K102_0083 EZ402U	120	220	8.309	1911/230	3600	3600	5500	1.9	12	6.0	–	6.8	15
361	56	69	39	1.2	K102_0083 EZ404U	120	220	8.309	1911/230	3600	3600	5500	3.3	12	6.0	–	6.8	17
361	60	64	42	1.1	K102_0083 EZ502U	120	220	8.309	1911/230	3600	3600	5500	5.5	12	6.0	–	6.8	16
361	60	67	42	1.1	K102_0083 EZ701U	120	220	8.309	1911/230	3600	3600	5500	8.8	12	6.0	–	6.8	18
452	10	11	14	3.8	K102_0066 EZ302U	32	48	6.644	299/45	3600	3600	5500	0.69	12	6.0	–	6.8	12
452	13	14	19	2.9	K102_0066 EZ303U	39	48	6.644	299/45	3600	3600	5500	0.80	12	6.0	–	6.8	12
452	18	19	16	3.4	K102_0066 EZ401U	55	190	6.644	299/45	3600	3600	5500	1.3	12	6.0	–	6.8	14
452	28	30	25	2.2	K102_0066 EZ501U	100	190	6.644	299/45	3600	3600	5500	3.3	12	6.0	–	6.8	15
452	30	34	27	2.0	K102_0066 EZ402U	100	190	6.644	299/45	3600	3600	5500	2.0	12	6.0	–	6.8	15
452	44	55	39	1.4	K102_0066 EZ404U	120	190	6.644	299/45	3600	3600	5500	3.4	12	6.0	–	6.8	17
452	48	52	42	1.3	K102_0066 EZ502U	120	190	6.644	299/45	3600	3600	5500	5.6	12	6.0	–	6.8	16
452	48	53	42	1.3	K102_0066 EZ701U	120	190	6.644	299/45	3600	3600	5500	8.9	12	6.0	–	6.8	18
500	16	17	16	3.6	K102_0060 EZ401U	49	170	6.000	6/1	3300	3300	5000	1.4	12	6.0	–	6.8	14
500	25	27	25	2.4	K102_0060 EZ501U	93	170	6.000	6/1	3300	3300	5000	3.4	12	6.0	–	6.8	15
500	27	30	27	2.2	K102_0060 EZ402U	93	170	6.000	6/1	3300	3300	5000	2.1	12	6.0	–	6.8	15
500	40	50	40	1.5	K102_0060 EZ404U	110	170	6.000	6/1	3300	3300	5000	3.5	12	6.0	–	6.8	17
500	43	47	43	1.4	K102_0060 EZ502U	110	170	6.000	6/1	3300	3300	5000	5.7	12	6.0	–	6.8	16
500	43	48	43	1.4	K102_0060 EZ701U	110	170	6.000	6/1	3300	3300	5000	9.0	12	6.0	–	6.8	18
500	56	65	56	1.0	K102_0060 EZ503U	110	170	6.000	6/1	3300	3300	5000	8.1	12	6.0	–	6.8	18
539	8.6	9.1	16	3.8	K102_0056 EZ302U	27	41	5.568	1520/273	3300	3300	5000	0.95	12	6.0	–	6.8	12
539	11	12	21	2.9	K102_0056 EZ303U	32	41	5.568	1520/273	3300	3300	5000	1.1	12	6.0	–	6.8	12
539	15	16	16	3.8	K102_0056 EZ401U	46	160	5.568	1520/273	3300	3300	5000	1.6	12	6.0	–	6.8	14
539	23	25	25	2.5	K102_0056 EZ501U	86	160	5.568	1520/273	3300	3300	5000	3.6	12	6.0	–	6.8	15
539	25	28	27	2.3	K102_0056 EZ402U	86	160	5.568	1520/273	3300	3300	5000	2.3	12	6.0	–	6.8	15
539	37	46	40	1.5	K102_0056 EZ404U	110	160	5.568	1520/273	3300	3300	5000	3.6	12	6.0	–	6.8	17
539	40	43	43	1.4	K102_0056 EZ502U	110	160	5.568	1520/273	3300	3300	5000	5.9	12	6.0	–	6.8	16
539	40	45	43	1.4	K102_0056 EZ701U	110	160	5.568	1520/273	3300	3300	5000	9.2	12	6.0	–	6.8	18
539	52	60	56	1.1	K102_0056 EZ503U	110	160	5.568	1520/273	3300	3300	5000	8.2	12	6.0	–	6.8	18
750	8.0	8.5	27	2.9	K102_0040 EZ303U	23	29	4.000	4/1	3300	3300	5000	1.3	12	6.0	–	6.8	12
750	11	12	17	4.8	K102_0040 EZ401U	33	120	4.000	4/1	3300	3300	5000	1.8	12	6.0	–	6.8	14
750	17	18	26	3.1	K102_0040 EZ501U	62	120	4.000	4/1	3300	3300	5000	3.8	12	6.0	–	6.8	15
750	18	20	28	2.8	K102_0040 EZ402U	62	120	4.000	4/1	3300	3300	5000	2.5	12	6.0	–	6.8	15
750	27	33	41	1.9	K102_0040 EZ404U	93	120	4.000	4/1	3300	3300	5000	3.8	12	6.0	–	6.8	17
750	29	31	44	1.8	K102_0040 EZ502U	93	120	4.000	4/1	3300	3300	5000	6.1	12	6.0	–	6.8	16
750	29	32	44	1.8	K102_0040 EZ701U	78	120	4.000	4/1	3300	3300	5000	9.4	12	6.0	–	6.8	18
750	38	43	58	1.4	K102_0040 EZ503U	93	120	4.000	4/1	3300	3300	5000	8.4	12	6.0	–	6.8	18
K1 (n_{1N} = 6000 rpm, $M_{2acc,max}$ = 140 Nm)																		
107	48	52	6.2	1.8	K102_0560 EZ301U	100	170	56.10	1178/21	4000	4000	7000	0.21	12	6.0	–	6.8	11
128	41	43	5.5	2.3	K102_0470 EZ301U	120	200	46.92	2299/49	4000	4000	7000	0.22	12	6.0	–	6.8	11
128	68	76	9.2	1.4	K102_0470 EZ302U	120	200	46.92	2299/49	4000	4000	7000	0.32	12	6.0	–	6.8	12
149	35	37	8.0	1.8	K102_0400 EZ301U	74	120	40.30	403/10	4000	4000	7000	0.21	12	6.0	–	6.8	11
171	30	32	5.6	2.8	K102_0350 EZ301U	95	200	35.11	3686/105	4000	4000	7000	0.23	12	6.0	–	6.8	11
171	51	57	9.4	1.7	K102_0350 EZ302U	140	200	35.11	3686/105	4000	4000	7000	0.33	12	6.0	–	6.8	12
171	67	77	12	1.3	K102_0350 EZ303U	140	200	35.11	3686/105	4000	4000	7000	0.44	12	6.0	–	6.8	12
171	78	95	14	1.1	K102_0350 EZ401U	140	240	35.11	3686/105	4000	4000	7000	0.97	12	6.0	–	6.8	14

n_{2N} [rpm]	M_{2N} [Nm]	$M_{2,0}$ [Nm]	a_{th}	S	Type	M_{2acc} [Nm]	M_{2NOT} [Nm]	i	i_{exakt}	n_{1maxDB} EL1,2 [rpm]	n_{1maxDB} EL3,4,5,6 [rpm]	n_{1maxZB} [rpm]	J_1 [kgcm²]	$\Delta\varphi_2$ [arcmin]	$\Delta\varphi_{2redII}$ [arcmin]	$\Delta\varphi_{2redI}$ [arcmin]	C_2 [Nm/arcmin]	m [kg]
K1 (n_{1N} = 6000 rpm, $M_{2acc,max}$ = 140 Nm)																		
178	29	31	6.4	2.5	K102_0340 EZ301U	88	150	33.71	4719/140	4000	4000	7000	0.22	12	6.0	–	6.8	11
178	49	55	11	1.5	K102_0340 EZ302U	88	150	33.71	4719/140	4000	4000	7000	0.32	12	6.0	–	6.8	12
214	24	26	5.7	3.2	K102_0280 EZ301U	76	170	28.05	589/21	4000	4000	7000	0.25	12	6.0	–	6.8	11
214	41	46	9.6	1.9	K102_0280 EZ302U	130	170	28.05	589/21	4000	4000	7000	0.35	12	6.0	–	6.8	12
214	53	61	13	1.5	K102_0280 EZ303U	130	170	28.05	589/21	4000	4000	7000	0.46	12	6.0	–	6.8	12
214	63	76	15	1.3	K102_0280 EZ401U	140	240	28.05	589/21	4000	4000	7000	0.99	12	6.0	–	6.8	14
238	22	23	5.7	3.5	K102_0250 EZ301U	68	140	25.22	1261/50	4000	4000	7000	0.24	12	6.0	–	6.8	11
238	37	41	9.7	2.1	K102_0250 EZ302U	110	140	25.22	1261/50	4000	4000	7000	0.34	12	6.0	–	6.8	12
238	48	55	13	1.6	K102_0250 EZ303U	110	140	25.22	1261/50	4000	4000	7000	0.45	12	6.0	–	6.8	12
238	56	68	15	1.3	K102_0250 EZ401U	120	190	25.22	1261/50	4000	4000	7000	0.98	12	6.0	–	6.8	14
258	20	21	5.8	3.7	K102_0230 EZ301U	63	160	23.27	1140/49	4000	4000	7000	0.28	12	6.0	–	6.8	11
258	34	38	9.7	2.2	K102_0230 EZ302U	110	160	23.27	1140/49	4000	4000	7000	0.38	12	6.0	–	6.8	12
258	44	51	13	1.7	K102_0230 EZ303U	130	160	23.27	1140/49	4000	4000	7000	0.49	12	6.0	–	6.8	12
258	52	63	15	1.4	K102_0230 EZ401U	140	240	23.27	1140/49	4000	4000	7000	1.0	12	6.0	–	6.8	14
298	17	19	5.9	4.0	K102_0200 EZ301U	55	120	20.15	403/20	4000	4000	7000	0.26	12	6.0	–	6.8	11
298	29	33	9.9	2.4	K102_0200 EZ302U	97	120	20.15	403/20	4000	4000	7000	0.36	12	6.0	–	6.8	12
298	38	44	13	1.8	K102_0200 EZ303U	97	120	20.15	403/20	4000	4000	7000	0.47	12	6.0	–	6.8	12
298	45	55	15	1.6	K102_0200 EZ401U	130	220	20.15	403/20	4000	4000	7000	1.0	12	6.0	–	6.8	14
298	66	86	22	1.1	K102_0200 EZ501U	130	220	20.15	403/20	4000	4000	7000	3.0	12	6.0	–	6.8	15
298	68	96	23	1.0	K102_0200 EZ402U	130	220	20.15	403/20	4000	4000	7000	1.7	12	6.0	–	6.8	15
342	15	16	5.9	4.4	K102_0175 EZ301U	48	130	17.56	2090/119	4000	4000	6000	0.32	12	6.0	–	6.8	11
342	26	29	10	2.6	K102_0175 EZ302U	85	130	17.56	2090/119	4000	4000	6000	0.42	12	6.0	–	6.8	12
342	33	38	13	2.0	K102_0175 EZ303U	100	130	17.56	2090/119	4000	4000	6000	0.53	12	6.0	–	6.8	12
342	39	48	15	1.7	K102_0175 EZ401U	140	240	17.56	2090/119	4000	4000	6000	1.1	12	6.0	–	6.8	14
342	58	75	23	1.2	K102_0175 EZ501U	140	240	17.56	2090/119	4000	4000	6000	3.0	12	6.0	–	6.8	15
342	60	83	23	1.1	K102_0175 EZ402U	140	240	17.56	2090/119	4000	4000	6000	1.8	12	6.0	–	6.8	15
359	14	15	5.9	4.6	K102_0165 EZ301U	45	110	16.71	117/7	4000	4000	7000	0.29	12	6.0	–	6.8	11
359	24	27	10	2.7	K102_0165 EZ302U	81	110	16.71	117/7	4000	4000	7000	0.39	12	6.0	–	6.8	12
359	32	36	13	2.1	K102_0165 EZ303U	91	110	16.71	117/7	4000	4000	7000	0.50	12	6.0	–	6.8	12
359	37	45	15	1.8	K102_0165 EZ401U	130	220	16.71	117/7	4000	4000	7000	1.0	12	6.0	–	6.8	14
359	55	71	23	1.2	K102_0165 EZ501U	130	220	16.71	117/7	4000	4000	7000	3.0	12	6.0	–	6.8	15
359	57	79	23	1.2	K102_0165 EZ402U	130	220	16.71	117/7	4000	4000	7000	1.7	12	6.0	–	6.8	15
425	21	23	10	3.0	K102_0140 EZ302U	68	100	14.11	494/35	4000	4000	6000	0.47	12	6.0	–	6.8	12
425	27	31	13	2.3	K102_0140 EZ303U	82	100	14.11	494/35	4000	4000	6000	0.58	12	6.0	–	6.8	12
425	31	38	16	2.0	K102_0140 EZ401U	120	240	14.11	494/35	4000	4000	6000	1.1	12	6.0	–	6.8	14
425	47	60	23	1.3	K102_0140 EZ501U	140	240	14.11	494/35	4000	4000	6000	3.1	12	6.0	–	6.8	15
425	48	67	24	1.3	K102_0140 EZ402U	140	240	14.11	494/35	4000	4000	6000	1.8	12	6.0	–	6.8	15
476	18	21	10	3.3	K102_0125 EZ302U	61	92	12.62	429/34	4000	4000	6000	0.44	12	6.0	–	6.8	12
476	24	28	13	2.5	K102_0125 EZ303U	73	92	12.62	429/34	4000	4000	6000	0.55	12	6.0	–	6.8	12
476	28	34	16	2.1	K102_0125 EZ401U	100	220	12.62	429/34	4000	4000	6000	1.1	12	6.0	–	6.8	14
476	42	54	23	1.4	K102_0125 EZ501U	130	220	12.62	429/34	4000	4000	6000	3.1	12	6.0	–	6.8	15
476	43	60	24	1.4	K102_0125 EZ402U	130	220	12.62	429/34	4000	4000	6000	1.8	12	6.0	–	6.8	15
592	15	17	10	3.8	K102_0100 EZ302U	49	74	10.14	507/50	4000	4000	6000	0.50	12	6.0	–	6.8	12
592	19	22	14	2.9	K102_0100 EZ303U	59	74	10.14	507/50	4000	4000	6000	0.61	12	6.0	–	6.8	12
592	23	28	16	2.5	K102_0100 EZ401U	84	220	10.14	507/50	4000	4000	6000	1.1	12	6.0	–	6.8	14
592	33	43	24	1.7	K102_0100 EZ501U	130	220	10.14	507/50	4000	4000	6000	3.1	12	6.0	–	6.8	15
592	34	48	24	1.6	K102_0100 EZ402U	130	220	10.14	507/50	4000	4000	6000	1.8	12	6.0	–	6.8	15
592	51	77	36	1.1	K102_0100 EZ502U	130	220	10.14	507/50	4000	4000	6000	5.4	12	6.0	–	6.8	16
592	51	78	36	1.1	K102_0100 EZ701U	130	220	10.14	507/50	4000	4000	6000	8.7	12	6.0	–	6.8	18
K2 (n_{1N} = 3000 rpm, $M_{2acc,max}$ = 220 Nm)																		
17	161	164	4.1	1.2	K203_1810 EZ301U	220	400	181.0	86903/480	4000	4000	6500	0.24	10	6.0	2.5	11	22
22	120	123	3.8	1.7	K203_1350 EZ301U	220	400	135.3	30315/224	4000	4000	6500	0.24	10	6.0	2.5	11	22
27	97	99	3.6	2.1	K203_1090 EZ301U	220	400	109.5	26273/240	4000	4000	6500	0.25	10	6.0	2.5	11	22
33	81	82	3.4	2.5	K203_0910 EZ301U	220	400	90.79	46483/512	4000	4000	6500	0.25	10	6.0	2.5	11	22
33	138	146	5.9	1.4	K203_0910 EZ302U	220	400	90.79	46483/512	4000	4000	6500	0.35	10	6.0	2.5	11	22
38	121	128	5.7	1.7	K203_0800 EZ302U	220	400	79.62	26273/330	4000	4000	6500	0.35	10	6.0	2.5	11	22
38	158	167	7.4	1.3	K203_0800 EZ303U	220	400	79.62	26273/330	4000	4000	6500	0.46	10	6.0	2.5	11	23
43	107	113	8.4	1.2	K202_0690 EZ302U	160	260	69.43	6665/96	4000	4000	6500	0.33	10	5.0	1.5	11	19
44	104	110	5.5	1.9	K203_0680 EZ302U	220	400	68.42	26273/384	4000	4000	6500	0.36	10	6.0	2.5	11	22
44	135	143	7.1	1.5	K203_0680 EZ303U	220	400	68.42	26273/384	4000	4000	6500	0.47	10	6.0	2.5	11	23
45	100	106	5.4	2.0	K203_0660 EZ302U	220	400	66.03	46483/704	4000	4000	6500	0.35	10	6.0	2.5	11	22
45	131	138	7.1	1.5	K203_0660 EZ303U	220	400	66.03	46483/704	4000	4000	6500	0.46	10	6.0	2.5	11	23
54	86	91	6.6	1.9	K202_0560 EZ302U	190	270	55.54	1333/24	4000	4000	6500	0.34	10	5.0	1.5	11	19
54	112	118	8.6	1.4	K202_0560 EZ303U	190	270	55.54	1333/24	4000	4000	6500	0.45	10	5.0	1.5	11	20

n_{2N} [rpm]	M_{2N} [Nm]	$M_{2,0}$ [Nm]	a_{th}	S	Type	M_{2acc} [Nm]	M_{2NOT} [Nm]	i	i_{exakt}	n_{1maxDB} EL1,2 [rpm]	n_{1maxDB} EL3,4,5,6 [rpm]	n_{1maxZB} [rpm]	J_1 [kgcm²]	$\Delta\varphi_2$ [arcmin]	$\Delta\varphi_{2redII}$ [arcmin]	$\Delta\varphi_{2redI}$ [arcmin]	C_2 [Nm/ arcmin]	m [kg]
K2 (n_{1N} = 3000 rpm, $M_{2acc,max}$ = 220 Nm)																		
55	82	87	5.2	2.4	K203_0540 EZ302U	220	350	54.25	135407/2496	4000	4000	6500	0.37	10	6.0	2.5	11	22
55	107	114	6.7	1.9	K203_0540 EZ303U	220	350	54.25	135407/2496	4000	4000	6500	0.48	10	6.0	2.5	11	23
55	145	156	9.1	1.4	K203_0540 EZ401U	220	350	54.25	135407/2496	4000	4000	6500	1.0	10	6.0	2.5	11	24
59	78	82	11	1.2	K202_0500 EZ302U	120	190	50.49	6665/132	4000	4000	6500	0.33	10	5.0	1.5	11	19
60	76	80	5.0	2.6	K203_0500 EZ302U	220	320	49.76	26273/528	4000	4000	6500	0.36	10	6.0	2.5	11	22
60	98	104	6.6	2.0	K203_0500 EZ303U	220	320	49.76	26273/528	4000	4000	6500	0.47	10	6.0	2.5	11	23
60	133	143	8.9	1.5	K203_0500 EZ401U	220	320	49.76	26273/528	4000	4000	6500	1.0	10	6.0	2.5	11	24
65	71	75	5.0	2.8	K202_0460 EZ302U	210	260	46.23	1849/40	4000	4000	6500	0.36	10	5.0	1.5	11	19
65	93	98	6.5	2.2	K202_0460 EZ303U	210	260	46.23	1849/40	4000	4000	6500	0.47	10	5.0	1.5	11	20
65	126	135	8.9	1.6	K202_0460 EZ401U	220	400	46.23	1849/40	4000	4000	6500	1.0	10	5.0	1.5	11	21
66	69	73	4.9	2.9	K203_0450 EZ302U	220	290	45.22	58609/1296	4000	4000	6500	0.38	10	6.0	2.5	11	22
66	89	95	6.4	2.2	K203_0450 EZ303U	220	290	45.22	58609/1296	4000	4000	6500	0.49	10	6.0	2.5	11	23
66	121	130	8.7	1.7	K203_0450 EZ401U	220	290	45.22	58609/1296	4000	4000	6500	1.0	10	6.0	2.5	11	24
74	62	66	8.4	1.9	K202_0400 EZ302U	140	200	40.39	1333/33	4000	4000	6500	0.35	10	5.0	1.5	11	19
74	81	86	11	1.4	K202_0400 EZ303U	140	200	40.39	1333/33	4000	4000	6500	0.46	10	5.0	1.5	11	20
76	60	63	4.8	3.3	K203_0390 EZ302U	190	250	39.45	135407/3432	4000	4000	6500	0.37	10	6.0	2.5	11	22
76	78	83	6.3	2.5	K203_0390 EZ303U	200	250	39.45	135407/3432	4000	4000	6500	0.48	10	6.0	2.5	11	23
76	106	113	8.5	1.9	K203_0390 EZ401U	200	250	39.45	135407/3432	4000	4000	6500	1.0	10	6.0	2.5	11	24
87	53	56	5.5	3.2	K202_0350 EZ302U	170	210	34.55	1935/56	4000	4000	6500	0.41	10	5.0	1.5	11	19
87	69	73	7.1	2.5	K202_0350 EZ303U	170	210	34.55	1935/56	4000	4000	6500	0.52	10	5.0	1.5	11	20
87	94	101	8.7	2.0	K202_0350 EZ401U	220	400	34.55	1935/56	4000	4000	6500	1.1	10	5.0	1.5	11	21
87	144	158	13	1.3	K202_0350 EZ501U	220	400	34.55	1935/56	4000	4000	6500	3.0	10	5.0	1.5	11	22
89	52	55	6.2	2.9	K202_0340 EZ302U	150	190	33.62	1849/55	4000	4000	6500	0.37	10	5.0	1.5	11	19
89	68	71	8.1	2.2	K202_0340 EZ303U	150	190	33.62	1849/55	4000	4000	6500	0.48	10	5.0	1.5	11	20
89	91	98	11	1.7	K202_0340 EZ401U	180	310	33.62	1849/55	4000	4000	6500	1.0	10	5.0	1.5	11	21
107	76	81	8.8	2.3	K202_0280 EZ401U	220	400	27.95	559/20	4000	4000	6500	1.1	10	5.0	1.5	11	21
107	117	127	14	1.5	K202_0280 EZ501U	220	400	27.95	559/20	4000	4000	6500	3.1	10	5.0	1.5	11	22
107	127	141	15	1.4	K202_0280 EZ402U	220	400	27.95	559/20	4000	4000	6500	1.8	10	5.0	1.5	11	22
119	39	41	6.9	3.2	K202_0250 EZ302U	120	160	25.13	1935/77	4000	4000	6500	0.42	10	5.0	1.5	11	19
119	50	53	9.0	2.5	K202_0250 EZ303U	120	160	25.13	1935/77	4000	4000	6500	0.53	10	5.0	1.5	11	20
119	68	73	8.9	2.5	K202_0250 EZ401U	210	400	25.13	1935/77	4000	4000	6500	1.1	10	5.0	1.5	11	21
119	105	115	14	1.6	K202_0250 EZ501U	220	400	25.13	1935/77	4000	4000	6500	3.0	10	5.0	1.5	11	22
119	115	127	15	1.5	K202_0250 EZ402U	220	400	25.13	1935/77	4000	4000	6500	1.8	10	5.0	1.5	11	22
129	36	38	6.3	3.8	K202_0230 EZ302U	110	170	23.18	2967/128	4000	4000	6500	0.52	10	5.0	1.5	11	19
129	47	49	8.2	2.9	K202_0230 EZ303U	130	170	23.18	2967/128	4000	4000	6500	0.63	10	5.0	1.5	11	20
129	63	67	9.0	2.6	K202_0230 EZ401U	190	400	23.18	2967/128	4000	4000	6500	1.2	10	5.0	1.5	11	21
129	97	106	14	1.7	K202_0230 EZ501U	220	400	23.18	2967/128	4000	4000	6500	3.1	10	5.0	1.5	11	22
129	106	117	15	1.6	K202_0230 EZ402U	220	400	23.18	2967/128	4000	4000	6500	1.9	10	5.0	1.5	11	22
148	55	59	9.1	2.9	K202_0200 EZ401U	170	400	20.33	1118/55	4000	4000	6500	1.1	10	5.0	1.5	11	21
148	85	93	14	1.9	K202_0200 EZ501U	220	400	20.33	1118/55	4000	4000	6500	3.1	10	5.0	1.5	11	22
148	93	103	15	1.7	K202_0200 EZ402U	220	400	20.33	1118/55	4000	4000	6500	1.8	10	5.0	1.5	11	22
148	136	170	22	1.2	K202_0200 EZ404U	220	400	20.33	1118/55	4000	4000	6500	3.2	10	5.0	1.5	11	24
148	146	158	24	1.1	K202_0200 EZ502U	220	400	20.33	1118/55	4000	4000	6500	5.4	10	5.0	1.5	11	24
148	146	164	24	1.1	K202_0200 EZ701U	220	400	20.33	1118/55	4000	4000	6500	8.7	10	5.0	1.5	11	26
172	27	28	7.8	3.8	K202_0175 EZ302U	85	130	17.47	559/32	3900	3900	5500	0.65	10	5.0	1.5	11	19
172	35	37	10	2.9	K202_0175 EZ303U	100	130	17.47	559/32	3900	3900	5500	0.76	10	5.0	1.5	11	20
172	47	51	9.2	3.2	K202_0175 EZ401U	140	400	17.47	559/32	3900	3900	5500	1.3	10	5.0	1.5	11	21
172	73	80	14	2.1	K202_0175 EZ501U	220	400	17.47	559/32	3900	3900	5500	3.3	10	5.0	1.5	11	22
172	80	88	15	1.9	K202_0175 EZ402U	220	400	17.47	559/32	3900	3900	5500	2.0	10	5.0	1.5	11	22
172	117	146	23	1.3	K202_0175 EZ404U	220	400	17.47	559/32	3900	3900	5500	3.3	10	5.0	1.5	11	24
172	125	136	24	1.2	K202_0175 EZ502U	220	400	17.47	559/32	3900	3900	5500	5.6	10	5.0	1.5	11	24
172	125	141	24	1.2	K202_0175 EZ701U	220	400	17.47	559/32	3900	3900	5500	8.9	10	5.0	1.5	11	26
178	26	27	8.0	3.8	K202_0170 EZ302U	82	120	16.86	2967/176	4000	4000	6500	0.55	10	5.0	1.5	11	19
178	34	36	10	2.9	K202_0170 EZ303U	98	120	16.86	2967/176	4000	4000	6500	0.66	10	5.0	1.5	11	20
178	46	49	9.2	3.3	K202_0170 EZ401U	140	400	16.86	2967/176	4000	4000	6500	1.2	10	5.0	1.5	11	21
178	70	77	14	2.1	K202_0170 EZ501U	220	400	16.86	2967/176	4000	4000	6500	3.2	10	5.0	1.5	11	22
178	77	85	15	1.9	K202_0170 EZ402U	220	400	16.86	2967/176	4000	4000	6500	1.9	10	5.0	1.5	11	22
178	113	141	23	1.3	K202_0170 EZ404U	220	400	16.86	2967/176	4000	4000	6500	3.2	10	5.0	1.5	11	24
178	121	131	24	1.2	K202_0170 EZ502U	220	400	16.86	2967/176	4000	4000	6500	5.5	10	5.0	1.5	11	24
178	121	136	24	1.2	K202_0170 EZ701U	220	400	16.86	2967/176	4000	4000	6500	8.8	10	5.0	1.5	11	26
217	38	40	9.4	3.7	K202_0140 EZ401U	110	400	13.85	2881/208	3900	3900	5500	1.4	10	5.0	1.5	11	21
217	58	63	14	2.4	K202_0140 EZ501U	210	400	13.85	2881/208	3900	3900	5500	3.4	10	5.0	1.5	11	22
217	63	70	16	2.2	K202_0140 EZ402U	210	400	13.85	2881/208	3900	3900	5500	2.1	10	5.0	1.5	11	22
217	93	116	23	1.5	K202_0140 EZ404U	220	400	13.85	2881/208	3900	3900	5500	3.5	10	5.0	1.5	11	24

n_{2N} [rpm]	M_{2N} [Nm]	$M_{2,0}$ [Nm]	a_{th}	S	Type	M_{2acc} [Nm]	M_{2NOT} [Nm]	i	i_{exakt}	n_{1maxDB} EL1,2 [rpm]	n_{1maxDB} EL3,4,5,6 [rpm]	n_{1maxZB} [rpm]	J_1 [kgcm²]	$\Delta\varphi_2$ [arcmin]	$\Delta\varphi_{2redII}$ [arcmin]	$\Delta\varphi_{2redI}$ [arcmin]	C_2 [Nm/ arcmin]	m [kg]
K2 (n_{1N} = 3000 rpm, $M_{2acc,max}$ = 220 Nm)																		
217	99	107	25	1.4	K202_0140 EZ502U	220	400	13.85	2881/208	3900	3900	5500	5.7	10	5.0	1.5	11	24
217	99	112	25	1.4	K202_0140 EZ701U	220	400	13.85	2881/208	3900	3900	5500	9.0	10	5.0	1.5	11	26
217	130	149	32	1.1	K202_0140 EZ503U	220	400	13.85	2881/208	3900	3900	5500	8.1	10	5.0	1.5	11	25
236	20	21	9.8	3.8	K202_0125 EZ302U	62	92	12.71	559/44	3900	3900	5500	0.70	10	5.0	1.5	11	19
236	26	27	13	2.9	K202_0125 EZ303U	74	92	12.71	559/44	3900	3900	5500	0.81	10	5.0	1.5	11	20
236	35	37	9.4	3.9	K202_0125 EZ401U	100	370	12.71	559/44	3900	3900	5500	1.3	10	5.0	1.5	11	21
236	53	58	15	2.6	K202_0125 EZ501U	200	370	12.71	559/44	3900	3900	5500	3.3	10	5.0	1.5	11	22
236	58	64	16	2.3	K202_0125 EZ402U	200	370	12.71	559/44	3900	3900	5500	2.0	10	5.0	1.5	11	22
236	85	106	23	1.6	K202_0125 EZ404U	220	370	12.71	559/44	3900	3900	5500	3.4	10	5.0	1.5	11	24
236	91	99	25	1.5	K202_0125 EZ502U	220	370	12.71	559/44	3900	3900	5500	5.6	10	5.0	1.5	11	24
236	91	102	25	1.5	K202_0125 EZ701U	220	400	12.71	559/44	3900	3900	5500	8.9	10	5.0	1.5	11	26
236	120	137	33	1.1	K202_0125 EZ503U	220	370	12.71	559/44	3900	3900	5500	8.0	10	5.0	1.5	11	25
260	18	19	11	3.8	K202_0115 EZ302U	56	84	11.55	1247/108	3500	3500	5000	0.95	10	5.0	1.5	11	19
260	23	25	14	2.9	K202_0115 EZ303U	67	84	11.55	1247/108	3500	3500	5000	1.1	10	5.0	1.5	11	20
260	31	34	9.5	4.2	K202_0115 EZ401U	95	340	11.55	1247/108	3500	3500	5000	1.6	10	5.0	1.5	11	21
260	48	53	15	2.7	K202_0115 EZ501U	180	340	11.55	1247/108	3500	3500	5000	3.6	10	5.0	1.5	11	22
260	53	58	16	2.5	K202_0115 EZ402U	180	340	11.55	1247/108	3500	3500	5000	2.3	10	5.0	1.5	11	22
260	77	96	23	1.7	K202_0115 EZ404U	220	340	11.55	1247/108	3500	3500	5000	3.6	10	5.0	1.5	11	24
260	83	90	25	1.6	K202_0115 EZ502U	220	340	11.55	1247/108	3500	3500	5000	5.9	10	5.0	1.5	11	24
260	83	93	25	1.6	K202_0115 EZ701U	220	400	11.55	1247/108	3500	3500	5000	9.2	10	5.0	1.5	11	26
260	109	124	33	1.2	K202_0115 EZ503U	220	340	11.55	1247/108	3500	3500	5000	8.2	10	5.0	1.5	11	25
298	27	29	9.6	4.6	K202_0100 EZ401U	83	290	10.07	2881/286	3900	3900	5500	1.5	10	5.0	1.5	11	21
298	42	46	15	3.0	K202_0100 EZ501U	160	290	10.07	2881/286	3900	3900	5500	3.5	10	5.0	1.5	11	22
298	46	51	16	2.7	K202_0100 EZ402U	160	290	10.07	2881/286	3900	3900	5500	2.2	10	5.0	1.5	11	22
298	67	84	24	1.9	K202_0100 EZ404U	220	290	10.07	2881/286	3900	3900	5500	3.6	10	5.0	1.5	11	24
298	72	78	25	1.7	K202_0100 EZ502U	220	290	10.07	2881/286	3900	3900	5500	5.8	10	5.0	1.5	11	24
298	72	81	25	1.7	K202_0100 EZ701U	200	400	10.07	2881/286	3900	3900	5500	9.1	10	5.0	1.5	11	26
298	95	108	33	1.3	K202_0100 EZ503U	220	290	10.07	2881/286	3900	3900	5500	8.2	10	5.0	1.5	11	25
298	117	141	41	1.1	K202_0100 EZ702U	220	400	10.07	2881/286	3900	3900	5500	14	10	5.0	1.5	11	28
326	25	27	9.7	4.9	K202_0092 EZ401U	76	270	9.190	2279/248	3500	3500	5000	1.8	10	5.0	1.5	11	21
326	38	42	15	3.2	K202_0092 EZ501U	140	270	9.190	2279/248	3500	3500	5000	3.8	10	5.0	1.5	11	22
326	42	46	16	2.9	K202_0092 EZ402U	140	270	9.190	2279/248	3500	3500	5000	2.5	10	5.0	1.5	11	22
326	62	77	24	2.0	K202_0092 EZ404U	210	270	9.190	2279/248	3500	3500	5000	3.9	10	5.0	1.5	11	24
326	66	71	26	1.8	K202_0092 EZ502U	210	270	9.190	2279/248	3500	3500	5000	6.1	10	5.0	1.5	11	24
326	66	74	26	1.8	K202_0092 EZ701U	180	400	9.190	2279/248	3500	3500	5000	9.4	10	5.0	1.5	11	26
326	86	99	34	1.4	K202_0092 EZ503U	210	270	9.190	2279/248	3500	3500	5000	8.5	10	5.0	1.5	11	25
326	107	128	42	1.1	K202_0092 EZ702U	220	400	9.190	2279/248	3500	3500	5000	15	10	5.0	1.5	11	28
326	120	143	47	1.0	K202_0092 EZ505U	220	400	9.190	2279/248	3500	3500	5000	13	10	5.0	1.5	11	28
357	17	18	17	2.9	K202_0084 EZ303U	49	61	8.397	2494/297	3500	3500	5000	1.2	10	5.0	1.5	11	20
357	35	38	15	3.4	K202_0084 EZ501U	130	240	8.397	2494/297	3500	3500	5000	3.7	10	5.0	1.5	11	22
357	38	42	16	3.1	K202_0084 EZ402U	130	240	8.397	2494/297	3500	3500	5000	2.4	10	5.0	1.5	11	22
357	56	70	24	2.1	K202_0084 EZ404U	200	240	8.397	2494/297	3500	3500	5000	3.7	10	5.0	1.5	11	24
357	60	65	26	2.0	K202_0084 EZ502U	200	240	8.397	2494/297	3500	3500	5000	6.0	10	5.0	1.5	11	24
357	60	68	26	2.0	K202_0084 EZ701U	160	400	8.397	2494/297	3500	3500	5000	9.3	10	5.0	1.5	11	26
357	79	90	34	1.5	K202_0084 EZ503U	200	240	8.397	2494/297	3500	3500	5000	8.3	10	5.0	1.5	11	25
357	98	117	42	1.2	K202_0084 EZ702U	220	400	8.397	2494/297	3500	3500	5000	14	10	5.0	1.5	11	28
357	110	130	47	1.1	K202_0084 EZ505U	220	400	8.397	2494/297	3500	3500	5000	13	10	5.0	1.5	11	28
421	51	57	26	2.2	K202_0071 EZ701U	140	400	7.118	2107/296	3000	3000	4500	9.8	10	5.0	1.5	11	26
421	83	99	42	1.4	K202_0071 EZ702U	210	400	7.118	2107/296	3000	3000	4500	15	10	5.0	1.5	11	28
421	93	110	48	1.2	K202_0071 EZ505U	210	400	7.118	2107/296	3000	3000	4500	13	10	5.0	1.5	11	28
449	28	30	15	3.9	K202_0067 EZ501U	100	190	6.683	2279/341	3500	3500	5000	4.0	10	5.0	1.5	11	22
449	30	34	17	3.6	K202_0067 EZ402U	100	190	6.683	2279/341	3500	3500	5000	2.7	10	5.0	1.5	11	22
449	45	56	25	2.4	K202_0067 EZ404U	160	190	6.683	2279/341	3500	3500	5000	4.1	10	5.0	1.5	11	24
449	48	52	26	2.3	K202_0067 EZ502U	160	190	6.683	2279/341	3500	3500	5000	6.3	10	5.0	1.5	11	24
449	48	54	26	2.3	K202_0067 EZ701U	130	400	6.683	2279/341	3500	3500	5000	9.6	10	5.0	1.5	11	26
449	63	72	35	1.7	K202_0067 EZ503U	160	190	6.683	2279/341	3500	3500	5000	8.7	10	5.0	1.5	11	25
449	78	93	43	1.4	K202_0067 EZ702U	210	400	6.683	2279/341	3500	3500	5000	15	10	5.0	1.5	11	28
449	88	104	48	1.3	K202_0067 EZ505U	210	400	6.683	2279/341	3500	3500	5000	13	10	5.0	1.5	11	28
449	107	135	59	1.0	K202_0067 EZ703U	210	400	6.683	2279/341	3500	3500	5000	23	10	5.0	1.5	11	30
500	25	27	15	4.2	K202_0060 EZ501U	93	170	6.000	6/1	3000	3000	4500	4.6	10	5.0	1.5	11	22
500	27	30	17	3.9	K202_0060 EZ402U	93	170	6.000	6/1	3000	3000	4500	3.3	10	5.0	1.5	11	22
500	40	50	25	2.6	K202_0060 EZ404U	140	170	6.000	6/1	3000	3000	4500	4.7	10	5.0	1.5	11	24
500	43	47	27	2.5	K202_0060 EZ502U	140	170	6.000	6/1	3000	3000	4500	6.9	10	5.0	1.5	11	24
500	43	48	27	2.5	K202_0060 EZ701U	120	400	6.000	6/1	3000	3000	4500	10	10	5.0	1.5	11	26

n_{2N} [rpm]	M_{2N} [Nm]	$M_{2,0}$ [Nm]	a_{th}	S	Type	M_{2acc} [Nm]	M_{2NOT} [Nm]	i	i_{exakt}	n_{1maxDB} EL1,2 [rpm]	n_{1maxDB} EL3,4,5,6 [rpm]	n_{1maxZB} [rpm]	J_1 [kgcm²]	$\Delta\varphi_2$ [arcmin]	$\Delta\varphi_{2redII}$ [arcmin]	$\Delta\varphi_{2redI}$ [arcmin]	C_2 [Nm/arcmin]	m [kg]
K2 (n_{1N} = 3000 rpm, $M_{2acc,max}$ = 220 Nm)																		
500	56	65	35	1.9	K202_0060 EZ503U	140	170	6.000	6/1	3000	3000	4500	9.3	10	5.0	1.5	11	25
500	70	84	43	1.5	K202_0060 EZ702U	200	400	6.000	6/1	3000	3000	4500	15	10	5.0	1.5	11	28
500	79	93	48	1.3	K202_0060 EZ505U	200	400	6.000	6/1	3000	3000	4500	14	10	5.0	1.5	11	28
500	96	121	59	1.1	K202_0060 EZ703U	200	400	6.000	6/1	3000	3000	4500	23	10	5.0	1.5	11	30
579	37	42	27	2.7	K202_0052 EZ701U	100	380	5.177	2107/407	3000	3000	4500	10	10	5.0	1.5	11	26
579	60	72	44	1.7	K202_0052 EZ702U	190	380	5.177	2107/407	3000	3000	4500	15	10	5.0	1.5	11	28
579	68	80	49	1.5	K202_0052 EZ505U	190	380	5.177	2107/407	3000	3000	4500	14	10	5.0	1.5	11	28
579	83	104	60	1.2	K202_0052 EZ703U	190	380	5.177	2107/407	3000	3000	4500	23	10	5.0	1.5	11	30
687	20	22	17	4.8	K202_0044 EZ402U	68	130	4.364	48/11	3000	3000	4500	3.7	10	5.0	1.5	11	22
687	29	36	25	3.3	K202_0044 EZ404U	100	130	4.364	48/11	3000	3000	4500	5.1	10	5.0	1.5	11	24
687	31	34	27	3.0	K202_0044 EZ502U	100	130	4.364	48/11	3000	3000	4500	7.3	10	5.0	1.5	11	24
687	31	35	27	3.0	K202_0044 EZ701U	85	320	4.364	48/11	3000	3000	4500	11	10	5.0	1.5	11	26
687	41	47	36	2.3	K202_0044 EZ503U	100	130	4.364	48/11	3000	3000	4500	9.7	10	5.0	1.5	11	25
687	51	61	44	1.9	K202_0044 EZ702U	170	320	4.364	48/11	3000	3000	4500	16	10	5.0	1.5	11	28
687	57	68	50	1.7	K202_0044 EZ505U	180	320	4.364	48/11	3000	3000	4500	14	10	5.0	1.5	11	28
687	70	88	61	1.4	K202_0044 EZ703U	180	320	4.364	48/11	3000	3000	4500	24	10	5.0	1.5	11	30
750	29	32	27	3.2	K202_0040 EZ701U	78	290	4.000	4/1	3000	3000	4500	11	10	5.0	1.5	11	26
750	47	56	45	2.0	K202_0040 EZ702U	160	290	4.000	4/1	3000	3000	4500	16	10	5.0	1.5	11	28
750	52	62	50	1.8	K202_0040 EZ505U	170	290	4.000	4/1	3000	3000	4500	15	10	5.0	1.5	11	28
750	64	81	61	1.4	K202_0040 EZ703U	170	290	4.000	4/1	3000	3000	4500	24	10	5.0	1.5	11	30
K2 (n_{1N} = 4500 rpm, $M_{2acc,max}$ = 220 Nm)																		
447	93	149	37	1.2	K202_0100 EZ505U	220	400	10.07	2881/286	3900	3900	5500	13	10	5.0	1.5	11	28
490	85	136	38	1.3	K202_0092 EZ505U	220	400	9.190	2279/248	3500	3500	5000	13	10	5.0	1.5	11	28
536	77	125	38	1.3	K202_0084 EZ505U	220	400	8.397	2494/297	3500	3500	5000	13	10	5.0	1.5	11	28
536	99	163	48	1.0	K202_0084 EZ703U	220	400	8.397	2494/297	3500	3500	5000	22	10	5.0	1.5	11	30
632	66	106	39	1.5	K202_0071 EZ505U	210	400	7.118	2107/296	3000	3000	4500	13	10	5.0	1.5	11	28
632	84	138	49	1.2	K202_0071 EZ703U	210	400	7.118	2107/296	3000	3000	4500	23	10	5.0	1.5	11	30
673	62	99	39	1.6	K202_0067 EZ505U	210	400	6.683	2279/341	3500	3500	5000	13	10	5.0	1.5	11	28
673	78	130	49	1.2	K202_0067 EZ703U	210	400	6.683	2279/341	3500	3500	5000	23	10	5.0	1.5	11	30
750	55	89	39	1.7	K202_0060 EZ505U	200	400	6.000	6/1	3000	3000	4500	14	10	5.0	1.5	11	28
750	70	116	50	1.3	K202_0060 EZ703U	200	400	6.000	6/1	3000	3000	4500	23	10	5.0	1.5	11	30
869	48	77	40	1.8	K202_0052 EZ505U	190	380	5.177	2107/407	3000	3000	4500	14	10	5.0	1.5	11	28
869	61	100	50	1.4	K202_0052 EZ703U	190	380	5.177	2107/407	3000	3000	4500	23	10	5.0	1.5	11	30
1031	40	65	40	2.1	K202_0044 EZ505U	180	320	4.364	48/11	3000	3000	4500	14	10	5.0	1.5	11	28
1031	51	85	51	1.6	K202_0044 EZ703U	180	320	4.364	48/11	3000	3000	4500	24	10	5.0	1.5	11	30
1125	37	59	40	2.2	K202_0040 EZ505U	170	290	4.000	4/1	3000	3000	4500	15	10	5.0	1.5	11	28
1125	47	78	51	1.7	K202_0040 EZ703U	170	290	4.000	4/1	3000	3000	4500	24	10	5.0	1.5	11	30
K2 (n_{1N} = 6000 rpm, $M_{2acc,max}$ = 220 Nm)																		
66	130	146	5.5	1.5	K203_0910 EZ302U	220	400	90.79	46483/512	4000	4000	6500	0.35	10	6.0	2.5	11	22
75	114	128	5.4	1.7	K203_0800 EZ302U	220	400	79.62	26273/330	4000	4000	6500	0.35	10	6.0	2.5	11	22
86	101	113	7.9	1.3	K202_0690 EZ302U	160	260	69.43	6665/96	4000	4000	6500	0.33	10	5.0	1.5	11	19
88	98	110	5.5	1.9	K203_0680 EZ302U	220	400	68.42	26273/384	4000	4000	6500	0.36	10	6.0	2.5	11	22
88	128	147	7.1	1.5	K203_0680 EZ303U	220	400	68.42	26273/384	4000	4000	6500	0.47	10	6.0	2.5	11	23
91	95	106	5.5	2.0	K203_0660 EZ302U	220	400	66.03	46483/704	4000	4000	6500	0.35	10	6.0	2.5	11	22
91	124	142	7.2	1.5	K203_0660 EZ303U	220	400	66.03	46483/704	4000	4000	6500	0.46	10	6.0	2.5	11	23
108	81	91	6.3	2.0	K202_0560 EZ302U	190	270	55.54	1333/24	4000	4000	6500	0.34	10	5.0	1.5	11	19
108	106	121	8.2	1.5	K202_0560 EZ303U	190	270	55.54	1333/24	4000	4000	6500	0.45	10	5.0	1.5	11	20
111	78	87	5.6	2.2	K203_0540 EZ302U	220	350	54.25	135407/2496	4000	4000	6500	0.37	10	6.0	2.5	11	22
111	102	117	7.3	1.7	K203_0540 EZ303U	220	350	54.25	135407/2496	4000	4000	6500	0.48	10	6.0	2.5	11	23
111	119	145	8.5	1.5	K203_0540 EZ401U	220	350	54.25	135407/2496	4000	4000	6500	1.0	10	6.0	2.5	11	24
119	73	82	10	1.3	K202_0500 EZ302U	120	190	50.49	6665/132	4000	4000	6500	0.33	10	5.0	1.5	11	19
121	71	80	5.6	2.4	K203_0500 EZ302U	220	320	49.76	26273/528	4000	4000	6500	0.36	10	6.0	2.5	11	22
121	93	107	7.3	1.8	K203_0500 EZ303U	220	320	49.76	26273/528	4000	4000	6500	0.47	10	6.0	2.5	11	23
121	109	133	8.6	1.6	K203_0500 EZ401U	220	320	49.76	26273/528	4000	4000	6500	1.0	10	6.0	2.5	11	24
130	67	75	5.7	2.5	K202_0460 EZ302U	210	260	46.23	1849/40	4000	4000	6500	0.36	10	5.0	1.5	11	19
130	88	101	7.5	1.9	K202_0460 EZ303U	210	260	46.23	1849/40	4000	4000	6500	0.47	10	5.0	1.5	11	20
130	103	126	8.8	1.6	K202_0460 EZ401U	220	400	46.23	1849/40	4000	4000	6500	1.0	10	5.0	1.5	11	21
133	65	73	5.7	2.5	K203_0450 EZ302U	220	290	45.22	58609/1296	4000	4000	6500	0.38	10	6.0	2.5	11	22
133	85	97	7.4	1.9	K203_0450 EZ303U	220	290	45.22	58609/1296	4000	4000	6500	0.49	10	6.0	2.5	11	23
133	99	121	8.7	1.7	K203_0450 EZ401U	220	290	45.22	58609/1296	4000	4000	6500	1.0	10	6.0	2.5	11	24
149	59	66	7.9	2.0	K202_0400 EZ302U	140	200	40.39	1333/33	4000	4000	6500	0.35	10	5.0	1.5	11	19
149	77	88	10	1.5	K202_0400 EZ303U	140	200	40.39	1333/33	4000	4000	6500	0.46	10	5.0	1.5	11	20
152	57	63	5.7	2.8	K203_0390 EZ302U	190	250	39.45	135407/3432	4000	4000	6500	0.37	10	6.0	2.5	11	22
152	74	85	7.5	2.1	K203_0390 EZ303U	200	250	39.45	135407/3432	4000	4000	6500	0.48	10	6.0	2.5	11	23

n_{2N} [rpm]	M_{2N} [Nm]	$M_{2,0}$ [Nm]	a_{th}	S	Type	M_{2acc} [Nm]	M_{2NOT} [Nm]	i	i_{exakt}	n_{1maxDB} EL1,2 [rpm]	n_{1maxDB} EL3,4,5,6 [rpm]	n_{1maxZB} [rpm]	J_1 [kgcm²]	$\Delta\varphi_2$ [arcmin]	$\Delta\varphi_{2redII}$ [arcmin]	$\Delta\varphi_{2redI}$ [arcmin]	C_2 [Nm/arcmin]	m [kg]
K2 (n_{1N} = 6000 rpm, $M_{2acc,max}$ = 220 Nm)																		
152	87	106	8.8	1.8	K203_0390 EZ401U	200	250	39.45	135407/3432	4000	4000	6500	1.0	10	6.0	2.5	11	24
174	50	56	5.9	3.0	K202_0350 EZ302U	170	210	34.55	1935/56	4000	4000	6500	0.41	10	5.0	1.5	11	19
174	66	75	7.7	2.3	K202_0350 EZ303U	170	210	34.55	1935/56	4000	4000	6500	0.52	10	5.0	1.5	11	20
174	77	94	9.0	2.0	K202_0350 EZ401U	220	400	34.55	1935/56	4000	4000	6500	1.1	10	5.0	1.5	11	21
174	114	147	13	1.3	K202_0350 EZ501U	220	400	34.55	1935/56	4000	4000	6500	3.0	10	5.0	1.5	11	22
174	117	164	14	1.3	K202_0350 EZ402U	220	400	34.55	1935/56	4000	4000	6500	1.8	10	5.0	1.5	11	22
178	49	55	5.9	3.0	K202_0340 EZ302U	150	190	33.62	1849/55	4000	4000	6500	0.37	10	5.0	1.5	11	19
178	64	73	7.7	2.3	K202_0340 EZ303U	150	190	33.62	1849/55	4000	4000	6500	0.48	10	5.0	1.5	11	20
178	75	91	9.0	2.0	K202_0340 EZ401U	180	310	33.62	1849/55	4000	4000	6500	1.0	10	5.0	1.5	11	21
215	62	76	9.2	2.2	K202_0280 EZ401U	220	400	27.95	559/20	4000	4000	6500	1.1	10	5.0	1.5	11	21
215	92	119	14	1.5	K202_0280 EZ501U	220	400	27.95	559/20	4000	4000	6500	3.1	10	5.0	1.5	11	22
215	95	133	14	1.5	K202_0280 EZ402U	220	400	27.95	559/20	4000	4000	6500	1.8	10	5.0	1.5	11	22
239	37	41	6.5	3.4	K202_0250 EZ302U	120	160	25.13	1935/77	4000	4000	6500	0.42	10	5.0	1.5	11	19
239	48	55	8.5	2.6	K202_0250 EZ303U	120	160	25.13	1935/77	4000	4000	6500	0.53	10	5.0	1.5	11	20
239	56	68	9.2	2.4	K202_0250 EZ401U	210	400	25.13	1935/77	4000	4000	6500	1.1	10	5.0	1.5	11	21
239	83	107	14	1.6	K202_0250 EZ501U	220	400	25.13	1935/77	4000	4000	6500	3.0	10	5.0	1.5	11	22
239	85	119	14	1.6	K202_0250 EZ402U	220	400	25.13	1935/77	4000	4000	6500	1.8	10	5.0	1.5	11	22
259	34	38	6.1	3.9	K202_0230 EZ302U	110	170	23.18	2967/128	4000	4000	6500	0.52	10	5.0	1.5	11	19
259	44	51	7.9	3.0	K202_0230 EZ303U	130	170	23.18	2967/128	4000	4000	6500	0.63	10	5.0	1.5	11	20
259	52	63	9.3	2.5	K202_0230 EZ401U	190	400	23.18	2967/128	4000	4000	6500	1.2	10	5.0	1.5	11	21
259	76	99	14	1.7	K202_0230 EZ501U	220	400	23.18	2967/128	4000	4000	6500	3.1	10	5.0	1.5	11	22
259	79	110	14	1.7	K202_0230 EZ402U	220	400	23.18	2967/128	4000	4000	6500	1.9	10	5.0	1.5	11	22
295	45	55	9.4	2.8	K202_0200 EZ401U	170	400	20.33	1118/55	4000	4000	6500	1.1	10	5.0	1.5	11	21
295	67	87	14	1.9	K202_0200 EZ501U	220	400	20.33	1118/55	4000	4000	6500	3.1	10	5.0	1.5	11	22
295	69	97	14	1.8	K202_0200 EZ402U	220	400	20.33	1118/55	4000	4000	6500	1.8	10	5.0	1.5	11	22
295	103	154	21	1.2	K202_0200 EZ502U	220	400	20.33	1118/55	4000	4000	6500	5.4	10	5.0	1.5	11	24
295	103	156	21	1.2	K202_0200 EZ701U	220	400	20.33	1118/55	4000	4000	6500	8.7	10	5.0	1.5	11	26
295	114	166	24	1.1	K202_0200 EZ404U	220	400	20.33	1118/55	4000	4000	6500	3.2	10	5.0	1.5	11	24
356	25	27	7.5	4.0	K202_0170 EZ302U	82	120	16.86	2967/176	4000	4000	6500	0.55	10	5.0	1.5	11	19
356	32	37	9.8	3.1	K202_0170 EZ303U	98	120	16.86	2967/176	4000	4000	6500	0.66	10	5.0	1.5	11	20
356	38	46	9.5	3.1	K202_0170 EZ401U	140	400	16.86	2967/176	4000	4000	6500	1.2	10	5.0	1.5	11	21
356	56	72	14	2.1	K202_0170 EZ501U	220	400	16.86	2967/176	4000	4000	6500	3.2	10	5.0	1.5	11	22
356	57	80	15	2.1	K202_0170 EZ402U	220	400	16.86	2967/176	4000	4000	6500	1.9	10	5.0	1.5	11	22
356	85	128	22	1.4	K202_0170 EZ502U	220	400	16.86	2967/176	4000	4000	6500	5.5	10	5.0	1.5	11	24
356	85	129	22	1.4	K202_0170 EZ701U	220	400	16.86	2967/176	4000	4000	6500	8.8	10	5.0	1.5	11	26
356	95	137	24	1.2	K202_0170 EZ404U	220	400	16.86	2967/176	4000	4000	6500	3.2	10	5.0	1.5	11	24
K3 (n_{1N} = 3000 rpm, $M_{2acc,max}$ = 390 Nm)																		
17	275	291	4.5	1.3	K303_1810 EZ302U	390	690	181.0	86903/480	3800	3800	6000	0.35	10	5.0	2.5	16	29
22	207	218	4.1	1.7	K303_1360 EZ302U	390	700	136.0	14147/104	3800	3800	6000	0.35	10	5.0	2.5	16	29
22	269	285	5.3	1.3	K303_1360 EZ303U	390	700	136.0	14147/104	3800	3800	6000	0.46	10	5.0	2.5	16	30
27	166	175	3.9	2.1	K303_1090 EZ302U	390	700	109.2	167743/1536	3800	3800	6000	0.36	10	5.0	2.5	16	29
27	216	229	5.0	1.6	K303_1090 EZ303U	390	700	109.2	167743/1536	3800	3800	6000	0.47	10	5.0	2.5	16	30
33	139	147	3.7	2.5	K303_0910 EZ302U	390	580	91.23	26273/288	3800	3800	6000	0.37	10	5.0	2.5	16	29
33	181	191	4.8	1.9	K303_0910 EZ303U	390	580	91.23	26273/288	3800	3800	6000	0.48	10	5.0	2.5	16	30
33	244	262	6.5	1.4	K303_0910 EZ401U	390	580	91.23	26273/288	3800	3800	6000	1.0	10	5.0	2.5	16	31
38	121	128	4.4	2.4	K303_0790 EZ302U	380	510	79.42	167743/2112	3800	3800	6000	0.36	10	5.0	2.5	16	29
38	157	166	5.7	1.8	K303_0790 EZ303U	390	510	79.42	167743/2112	3800	3800	6000	0.47	10	5.0	2.5	16	30
38	213	228	7.7	1.3	K303_0790 EZ401U	390	510	79.42	167743/2112	3800	3800	6000	1.0	10	5.0	2.5	16	31
43	107	113	5.8	2.0	K302_0690 EZ302U	240	300	69.43	6665/96	3800	3800	6000	0.37	10	4.0	1.5	16	24
43	139	147	7.5	1.5	K302_0690 EZ303U	240	300	69.43	6665/96	3800	3800	6000	0.48	10	4.0	1.5	16	25
44	103	109	3.5	3.3	K303_0680 EZ302U	320	430	67.73	74777/1104	3800	3800	6000	0.38	10	5.0	2.5	16	29
44	134	142	4.6	2.6	K303_0680 EZ303U	350	430	67.73	74777/1104	3800	3800	6000	0.49	10	5.0	2.5	16	30
44	181	194	6.2	1.9	K303_0680 EZ401U	350	430	67.73	74777/1104	3800	3800	6000	1.0	10	5.0	2.5	16	31
45	101	107	4.4	2.7	K303_0660 EZ302U	320	430	66.35	26273/396	3800	3800	6000	0.37	10	5.0	2.5	16	29
45	131	139	5.8	2.0	K303_0660 EZ303U	340	430	66.35	26273/396	3800	3800	6000	0.48	10	5.0	2.5	16	30
45	178	190	7.8	1.5	K303_0660 EZ401U	340	430	66.35	26273/396	3800	3800	6000	1.0	10	5.0	2.5	16	31
46	269	294	9.2	1.3	K303_0650 EZ501U	390	700	65.50	32422/495	3800	3800	6000	3.1	10	5.0	2.5	16	32
54	151	162	7.7	1.8	K302_0560 EZ401U	320	530	55.71	2451/44	3800	3800	6000	1.0	10	4.0	1.5	16	26
55	83	88	4.1	3.4	K303_0550 EZ302U	260	350	54.58	70735/1296	3800	3800	6000	0.40	10	5.0	2.5	16	29
55	108	114	5.3	2.6	K303_0550 EZ303U	280	350	54.58	70735/1296	3800	3800	6000	0.51	10	5.0	2.5	16	30
55	146	157	7.1	1.9	K303_0550 EZ401U	280	350	54.58	70735/1296	3800	3800	6000	1.0	10	5.0	2.5	16	31
56	222	242	8.8	1.6	K303_0540 EZ501U	390	700	53.88	8729/162	3800	3800	6000	3.1	10	5.0	2.5	16	32
59	78	82	7.3	2.0	K302_0500 EZ302U	170	220	50.49	6665/132	3800	3800	6000	0.37	10	4.0	1.5	16	24
59	101	107	9.6	1.5	K302_0500 EZ303U	170	220	50.49	6665/132	3800	3800	6000	0.48	10	4.0	1.5	16	25

n_{2N} [rpm]	M_{2N} [Nm]	$M_{2,0}$ [Nm]	a_{th}	S	Type	M_{2acc} [Nm]	M_{2NOT} [Nm]	i	i_{exakt}	n_{1maxDB} EL1,2 [rpm]	n_{1maxDB} EL3,4,5,6 [rpm]	n_{1maxZB} [rpm]	J_1 [kgcm²]	$\Delta\varphi_2$ [arcmin]	$\Delta\varphi_{2redII}$ [arcmin]	$\Delta\varphi_{2redI}$ [arcmin]	C_2 [Nm/ arcmin]	m [kg]
K3 (n_{1N} = 3000 rpm, $M_{2acc,max}$ = 390 Nm)																		
61	75	79	4.5	3.3	K303_0490 EZ302U	240	320	49.26	74777/1518	3800	3800	6000	0.39	10	5.0	2.5	16	29
61	97	103	5.8	2.6	K303_0490 EZ303U	250	320	49.26	74777/1518	3800	3800	6000	0.50	10	5.0	2.5	16	30
61	132	141	7.8	1.9	K303_0490 EZ401U	250	320	49.26	74777/1518	3800	3800	6000	1.0	10	5.0	2.5	16	31
62	200	219	8.5	1.8	K303_0490 EZ501U	390	700	48.63	184556/3795	3800	3800	6000	3.1	10	5.0	2.5	16	32
65	126	135	5.7	2.7	K302_0460 EZ401U	380	690	46.23	1849/40	3800	3800	6000	1.1	10	4.0	1.5	16	26
65	193	211	8.7	1.8	K302_0460 EZ501U	390	690	46.23	1849/40	3800	3800	6000	3.1	10	4.0	1.5	16	27
65	211	233	9.5	1.6	K302_0460 EZ402U	390	690	46.23	1849/40	3800	3800	6000	1.8	10	4.0	1.5	16	27
67	185	202	8.4	1.9	K303_0450 EZ501U	390	700	44.89	11223/250	3800	3800	6000	3.1	10	5.0	2.5	16	32
74	110	118	9.8	1.8	K302_0410 EZ401U	230	390	40.51	4902/121	3800	3800	6000	1.1	10	4.0	1.5	16	26
77	161	176	8.2	2.1	K303_0390 EZ501U	390	690	39.19	34916/891	3800	3800	6000	3.1	10	5.0	2.5	16	32
84	147	161	8.2	2.3	K303_0360 EZ501U	390	630	35.83	215/6	3800	3800	6000	3.2	10	5.0	2.5	16	32
84	253	274	14	1.3	K303_0360 EZ502U	390	630	35.83	215/6	3800	3800	6000	5.5	10	5.0	2.5	16	34
86	94	101	5.5	3.5	K302_0350 EZ401U	290	700	34.73	903/26	3800	3800	6000	1.2	10	4.0	1.5	16	26
86	145	158	8.4	2.3	K302_0350 EZ501U	390	700	34.73	903/26	3800	3800	6000	3.2	10	4.0	1.5	16	27
86	158	175	9.2	2.1	K302_0350 EZ402U	390	700	34.73	903/26	3800	3800	6000	1.9	10	4.0	1.5	16	27
86	232	290	13	1.4	K302_0350 EZ404U	390	700	34.73	903/26	3800	3800	6000	3.2	10	4.0	1.5	16	29
86	249	270	14	1.3	K302_0350 EZ502U	390	700	34.73	903/26	3800	3800	6000	5.5	10	4.0	1.5	16	29
86	249	280	14	1.3	K302_0350 EZ701U	390	700	34.73	903/26	3800	3800	6000	8.8	10	4.0	1.5	16	31
89	91	98	7.2	2.7	K302_0340 EZ401U	280	500	33.62	1849/55	3800	3800	6000	1.1	10	4.0	1.5	16	26
89	140	153	11	1.8	K302_0340 EZ501U	300	500	33.62	1849/55	3800	3800	6000	3.1	10	4.0	1.5	16	27
89	153	170	12	1.6	K302_0340 EZ402U	300	500	33.62	1849/55	3800	3800	6000	1.8	10	4.0	1.5	16	27
92	134	147	8.3	2.4	K303_0330 EZ501U	390	580	32.65	44892/1375	3800	3800	6000	3.1	10	5.0	2.5	16	32
92	231	250	14	1.4	K303_0330 EZ502U	390	580	32.65	44892/1375	3800	3800	6000	5.4	10	5.0	2.5	16	34
108	76	81	5.6	4.1	K302_0280 EZ401U	230	700	27.88	3569/128	3800	3800	6000	1.3	10	4.0	1.5	16	26
108	116	127	8.5	2.7	K302_0280 EZ501U	390	700	27.88	3569/128	3800	3800	6000	3.3	10	4.0	1.5	16	27
108	127	141	9.3	2.4	K302_0280 EZ402U	390	700	27.88	3569/128	3800	3800	6000	2.0	10	4.0	1.5	16	27
108	187	233	14	1.7	K302_0280 EZ404U	390	700	27.88	3569/128	3800	3800	6000	3.3	10	4.0	1.5	16	29
108	200	216	15	1.5	K302_0280 EZ502U	390	700	27.88	3569/128	3800	3800	6000	5.6	10	4.0	1.5	16	29
108	200	224	15	1.5	K302_0280 EZ701U	390	700	27.88	3569/128	3800	3800	6000	8.9	10	4.0	1.5	16	31
119	69	74	5.6	4.4	K302_0250 EZ401U	210	600	25.26	3612/143	3800	3800	6000	1.2	10	4.0	1.5	16	26
119	105	115	8.6	2.8	K302_0250 EZ501U	390	600	25.26	3612/143	3800	3800	6000	3.2	10	4.0	1.5	16	27
119	115	127	9.4	2.6	K302_0250 EZ402U	390	600	25.26	3612/143	3800	3800	6000	1.9	10	4.0	1.5	16	27
119	169	211	14	1.8	K302_0250 EZ404U	390	600	25.26	3612/143	3800	3800	6000	3.3	10	4.0	1.5	16	29
119	181	196	15	1.6	K302_0250 EZ502U	390	600	25.26	3612/143	3800	3800	6000	5.5	10	4.0	1.5	16	29
119	181	203	15	1.6	K302_0250 EZ701U	390	600	25.26	3612/143	3800	3800	6000	8.8	10	4.0	1.5	16	31
119	238	272	19	1.3	K302_0250 EZ503U	390	600	25.26	3612/143	3800	3800	6000	7.9	10	4.0	1.5	16	30
129	63	68	5.6	4.6	K302_0230 EZ401U	190	640	23.29	559/24	3800	3800	6000	1.4	10	4.0	1.5	16	26
129	97	106	8.7	3.0	K302_0230 EZ501U	360	640	23.29	559/24	3800	3800	6000	3.4	10	4.0	1.5	16	27
129	106	117	9.5	2.7	K302_0230 EZ402U	360	640	23.29	559/24	3800	3800	6000	2.1	10	4.0	1.5	16	27
129	156	194	14	1.9	K302_0230 EZ404U	390	640	23.29	559/24	3800	3800	6000	3.5	10	4.0	1.5	16	29
129	167	181	15	1.7	K302_0230 EZ502U	390	640	23.29	559/24	3800	3800	6000	5.7	10	4.0	1.5	16	29
129	167	188	15	1.7	K302_0230 EZ701U	390	700	23.29	559/24	3800	3800	6000	9.0	10	4.0	1.5	16	31
129	219	251	20	1.3	K302_0230 EZ503U	390	640	23.29	559/24	3800	3800	6000	8.1	10	4.0	1.5	16	30
148	85	92	8.8	3.3	K302_0200 EZ501U	310	510	20.28	3569/176	3800	3800	6000	3.3	10	4.0	1.5	16	27
148	92	102	9.6	3.0	K302_0200 EZ402U	310	510	20.28	3569/176	3800	3800	6000	2.0	10	4.0	1.5	16	27
148	136	169	14	2.0	K302_0200 EZ404U	390	510	20.28	3569/176	3800	3800	6000	3.4	10	4.0	1.5	16	29
148	146	157	15	1.9	K302_0200 EZ502U	390	510	20.28	3569/176	3800	3800	6000	5.6	10	4.0	1.5	16	29
148	146	163	15	1.9	K302_0200 EZ701U	390	700	20.28	3569/176	3800	3800	6000	8.9	10	4.0	1.5	16	31
148	191	218	20	1.5	K302_0200 EZ503U	390	510	20.28	3569/176	3800	3800	6000	8.0	10	4.0	1.5	16	30
148	236	283	24	1.2	K302_0200 EZ702U	390	700	20.28	3569/176	3800	3800	6000	14	10	4.0	1.5	16	33
173	72	79	8.9	3.7	K302_0175 EZ501U	270	500	17.29	1591/92	3500	3500	5000	3.7	10	4.0	1.5	16	27
173	79	87	9.7	3.3	K302_0175 EZ402U	270	500	17.29	1591/92	3500	3500	5000	2.4	10	4.0	1.5	16	27
173	116	144	14	2.3	K302_0175 EZ404U	390	500	17.29	1591/92	3500	3500	5000	3.7	10	4.0	1.5	16	29
173	124	134	15	2.1	K302_0175 EZ502U	390	500	17.29	1591/92	3500	3500	5000	6.0	10	4.0	1.5	16	29
173	124	139	15	2.1	K302_0175 EZ701U	340	700	17.29	1591/92	3500	3500	5000	9.3	10	4.0	1.5	16	31
173	163	186	20	1.6	K302_0175 EZ503U	390	500	17.29	1591/92	3500	3500	5000	8.3	10	4.0	1.5	16	30
173	201	242	25	1.3	K302_0175 EZ702U	390	700	17.29	1591/92	3500	3500	5000	14	10	4.0	1.5	16	33
173	226	268	28	1.2	K302_0175 EZ505U	390	700	17.29	1591/92	3500	3500	5000	13	10	4.0	1.5	16	33
177	71	77	8.9	3.7	K302_0170 EZ501U	260	470	16.94	559/33	3800	3800	6000	3.4	10	4.0	1.5	16	27
177	77	85	9.7	3.4	K302_0170 EZ402U	260	470	16.94	559/33	3800	3800	6000	2.2	10	4.0	1.5	16	27
177	113	141	14	2.3	K302_0170 EZ404U	380	470	16.94	559/33	3800	3800	6000	3.5	10	4.0	1.5	16	29
177	122	131	15	2.2	K302_0170 EZ502U	380	470	16.94	559/33	3800	3800	6000	5.7	10	4.0	1.5	16	29
177	122	136	15	2.2	K302_0170 EZ701U	330	700	16.94	559/33	3800	3800	6000	9.0	10	4.0	1.5	16	31
177	159	182	20	1.6	K302_0170 EZ503U	380	470	16.94	559/33	3800	3800	6000	8.1	10	4.0	1.5	16	30

n_{2N} [rpm]	M_{2N} [Nm]	$M_{2,0}$ [Nm]	a_{th}	S	Type	M_{2acc} [Nm]	M_{2NOT} [Nm]	i	i_{exakt}	n_{1maxDB} EL1,2 [rpm]	n_{1maxDB} EL3,4,5,6 [rpm]	n_{1maxZB} [rpm]	J_1 [kgcm²]	$\Delta\varphi_2$ [arcmin]	$\Delta\varphi_{2redII}$ [arcmin]	$\Delta\varphi_{2redI}$ [arcmin]	C_2 [Nm/arcmin]	m [kg]
K3 (n_{1N} = 3000 rpm, $M_{2acc,max}$ = 390 Nm)																		
177	197	237	25	1.3	K302_0170 EZ702U	390	700	16.94	559/33	3800	3800	6000	14	10	4.0	1.5	16	33
177	222	263	28	1.2	K302_0170 EZ505U	390	700	16.94	559/33	3800	3800	6000	13	10	4.0	1.5	16	33
215	58	64	9.0	4.2	K302_0140 EZ501U	220	410	13.94	1505/108	3500	3500	5000	3.9	10	4.0	1.5	16	27
215	64	70	9.9	3.9	K302_0140 EZ402U	220	410	13.94	1505/108	3500	3500	5000	2.7	10	4.0	1.5	16	27
215	93	116	15	2.6	K302_0140 EZ404U	320	410	13.94	1505/108	3500	3500	5000	4.0	10	4.0	1.5	16	29
215	100	108	16	2.5	K302_0140 EZ502U	320	410	13.94	1505/108	3500	3500	5000	6.2	10	4.0	1.5	16	29
215	100	112	16	2.5	K302_0140 EZ701U	270	700	13.94	1505/108	3500	3500	5000	9.5	10	4.0	1.5	16	31
215	131	150	20	1.9	K302_0140 EZ503U	320	410	13.94	1505/108	3500	3500	5000	8.6	10	4.0	1.5	16	30
215	162	195	25	1.5	K302_0140 EZ702U	390	700	13.94	1505/108	3500	3500	5000	15	10	4.0	1.5	16	33
215	182	216	28	1.3	K302_0140 EZ505U	390	700	13.94	1505/108	3500	3500	5000	13	10	4.0	1.5	16	33
215	223	281	35	1.1	K302_0140 EZ703U	390	700	13.94	1505/108	3500	3500	5000	23	10	4.0	1.5	16	35
239	52	57	9.1	4.5	K302_0125 EZ501U	200	370	12.58	3182/253	3500	3500	5000	3.8	10	4.0	1.5	16	27
239	57	63	10	4.1	K302_0125 EZ402U	200	370	12.58	3182/253	3500	3500	5000	2.5	10	4.0	1.5	16	27
239	84	105	15	2.8	K302_0125 EZ404U	290	370	12.58	3182/253	3500	3500	5000	3.8	10	4.0	1.5	16	29
239	90	98	16	2.6	K302_0125 EZ502U	290	370	12.58	3182/253	3500	3500	5000	6.1	10	4.0	1.5	16	29
239	90	101	16	2.6	K302_0125 EZ701U	240	700	12.58	3182/253	3500	3500	5000	9.4	10	4.0	1.5	16	31
239	118	135	21	2.0	K302_0125 EZ503U	290	370	12.58	3182/253	3500	3500	5000	8.4	10	4.0	1.5	16	30
239	146	176	25	1.6	K302_0125 EZ702U	390	700	12.58	3182/253	3500	3500	5000	15	10	4.0	1.5	16	33
239	165	195	29	1.4	K302_0125 EZ505U	390	700	12.58	3182/253	3500	3500	5000	13	10	4.0	1.5	16	33
239	201	254	35	1.2	K302_0125 EZ703U	390	700	12.58	3182/253	3500	3500	5000	22	10	4.0	1.5	16	35
258	48	53	9.2	4.8	K302_0115 EZ501U	180	340	11.61	1161/100	3200	3200	4500	4.3	10	4.0	1.5	16	27
258	53	59	10	4.4	K302_0115 EZ402U	180	340	11.61	1161/100	3200	3200	4500	3.0	10	4.0	1.5	16	27
258	78	97	15	3.0	K302_0115 EZ404U	270	340	11.61	1161/100	3200	3200	4500	4.4	10	4.0	1.5	16	29
258	83	90	16	2.8	K302_0115 EZ502U	270	340	11.61	1161/100	3200	3200	4500	6.6	10	4.0	1.5	16	29
258	83	93	16	2.8	K302_0115 EZ701U	230	700	11.61	1161/100	3200	3200	4500	9.9	10	4.0	1.5	16	31
258	109	125	21	2.1	K302_0115 EZ503U	270	340	11.61	1161/100	3200	3200	4500	9.0	10	4.0	1.5	16	30
258	135	162	26	1.7	K302_0115 EZ702U	390	700	11.61	1161/100	3200	3200	4500	15	10	4.0	1.5	16	33
258	152	180	29	1.5	K302_0115 EZ505U	390	700	11.61	1161/100	3200	3200	4500	14	10	4.0	1.5	16	33
258	186	234	35	1.2	K302_0115 EZ703U	390	700	11.61	1161/100	3200	3200	4500	23	10	4.0	1.5	16	35
296	46	51	10	4.8	K302_0100 EZ402U	160	300	10.14	3010/297	3500	3500	5000	2.8	10	4.0	1.5	16	27
296	68	85	15	3.3	K302_0100 EZ404U	240	300	10.14	3010/297	3500	3500	5000	4.2	10	4.0	1.5	16	29
296	73	79	16	3.0	K302_0100 EZ502U	240	300	10.14	3010/297	3500	3500	5000	6.4	10	4.0	1.5	16	29
296	73	82	16	3.0	K302_0100 EZ701U	200	700	10.14	3010/297	3500	3500	5000	9.7	10	4.0	1.5	16	31
296	95	109	21	2.3	K302_0100 EZ503U	240	300	10.14	3010/297	3500	3500	5000	8.8	10	4.0	1.5	16	30
296	118	142	26	1.9	K302_0100 EZ702U	390	700	10.14	3010/297	3500	3500	5000	15	10	4.0	1.5	16	33
296	133	157	29	1.7	K302_0100 EZ505U	390	700	10.14	3010/297	3500	3500	5000	13	10	4.0	1.5	16	33
296	162	204	36	1.4	K302_0100 EZ703U	390	700	10.14	3010/297	3500	3500	5000	23	10	4.0	1.5	16	35
324	67	75	16	3.2	K302_0093 EZ701U	180	670	9.267	1075/116	3200	3200	4500	10	10	4.0	1.5	16	31
324	108	129	26	2.0	K302_0093 EZ702U	370	670	9.267	1075/116	3200	3200	4500	16	10	4.0	1.5	16	33
324	121	144	29	1.8	K302_0093 EZ505U	390	670	9.267	1075/116	3200	3200	4500	14	10	4.0	1.5	16	33
324	148	187	36	1.4	K302_0093 EZ703U	390	670	9.267	1075/116	3200	3200	4500	24	10	4.0	1.5	16	35
355	57	70	16	3.5	K302_0084 EZ404U	200	250	8.444	2322/275	3200	3200	4500	4.6	10	4.0	1.5	16	29
355	61	66	17	3.2	K302_0084 EZ502U	200	250	8.444	2322/275	3200	3200	4500	6.8	10	4.0	1.5	16	29
355	61	68	16	3.4	K302_0084 EZ701U	160	610	8.444	2322/275	3200	3200	4500	10	10	4.0	1.5	16	31
355	79	91	22	2.5	K302_0084 EZ503U	200	250	8.444	2322/275	3200	3200	4500	9.2	10	4.0	1.5	16	30
355	98	118	26	2.1	K302_0084 EZ702U	340	610	8.444	2322/275	3200	3200	4500	15	10	4.0	1.5	16	33
355	111	131	30	1.9	K302_0084 EZ505U	390	610	8.444	2322/275	3200	3200	4500	14	10	4.0	1.5	16	33
355	135	170	36	1.5	K302_0084 EZ703U	390	610	8.444	2322/275	3200	3200	4500	23	10	4.0	1.5	16	35
406	53	60	16	3.7	K302_0074 EZ701U	140	540	7.391	473/64	2700	2700	4000	11	10	4.0	1.5	16	31
406	86	103	27	2.3	K302_0074 EZ702U	290	540	7.391	473/64	2700	2700	4000	16	10	4.0	1.5	16	33
406	97	115	30	2.1	K302_0074 EZ505U	380	540	7.391	473/64	2700	2700	4000	15	10	4.0	1.5	16	33
406	118	149	37	1.7	K302_0074 EZ703U	380	540	7.391	473/64	2700	2700	4000	24	10	4.0	1.5	16	35
445	48	54	17	4.0	K302_0067 EZ701U	130	490	6.740	2150/319	3200	3200	4500	11	10	4.0	1.5	16	31
445	78	94	27	2.5	K302_0067 EZ702U	270	490	6.740	2150/319	3200	3200	4500	16	10	4.0	1.5	16	33
445	88	105	30	2.2	K302_0067 EZ505U	360	490	6.740	2150/319	3200	3200	4500	14	10	4.0	1.5	16	33
445	108	136	37	1.8	K302_0067 EZ703U	360	490	6.740	2150/319	3200	3200	4500	24	10	4.0	1.5	16	35
500	43	48	17	4.3	K302_0060 EZ701U	120	440	6.000	6/1	2700	2700	4000	12	10	4.0	1.5	16	31
500	70	84	27	2.7	K302_0060 EZ702U	240	440	6.000	6/1	2700	2700	4000	17	10	4.0	1.5	16	33
500	79	93	30	2.4	K302_0060 EZ505U	350	440	6.000	6/1	2700	2700	4000	16	10	4.0	1.5	16	33
500	96	121	37	1.9	K302_0060 EZ703U	350	440	6.000	6/1	2700	2700	4000	25	10	4.0	1.5	16	35
500	124	176	48	1.5	K302_0060 EZ705U	350	700	6.000	6/1	2700	2700	4000	37	10	4.0	1.5	16	41
558	39	43	17	4.6	K302_0054 EZ701U	100	390	5.375	43/8	2700	2700	4000	12	10	4.0	1.5	16	31
558	63	75	27	2.9	K302_0054 EZ702U	210	390	5.375	43/8	2700	2700	4000	17	10	4.0	1.5	16	33
558	70	83	31	2.5	K302_0054 EZ505U	310	390	5.375	43/8	2700	2700	4000	15	10	4.0	1.5	16	33

n_{2N} [rpm]	M_{2N} [Nm]	$M_{2,0}$ [Nm]	a_{th}	S	Type	M_{2acc} [Nm]	M_{2NOT} [Nm]	i	i_{exakt}	n_{1maxDB} EL1,2 [rpm]	n_{1maxDB} EL3,4,5,6 [rpm]	n_{1maxZB} [rpm]	J_1 [kgcm²]	$\Delta\varphi_2$ [arcmin]	$\Delta\varphi_{2redII}$ [arcmin]	$\Delta\varphi_{2redI}$ [arcmin]	C_2 [Nm/arcmin]	m [kg]
K3 (n_{1N} = 3000 rpm, $M_{2acc,max}$ = 390 Nm)																		
558	86	108	38	2.1	K302_0054 EZ703U	310	390	5.375	43/8	2700	2700	4000	25	10	4.0	1.5	16	35
687	51	61	28	3.3	K302_0044 EZ702U	170	320	4.364	48/11	2700	2700	4000	18	10	4.0	1.5	16	33
687	57	68	31	2.9	K302_0044 EZ505U	250	320	4.364	48/11	2700	2700	4000	16	10	4.0	1.5	16	33
687	70	88	38	2.4	K302_0044 EZ703U	250	320	4.364	48/11	2700	2700	4000	26	10	4.0	1.5	16	35
687	90	128	49	1.8	K302_0044 EZ705U	310	700	4.364	48/11	2700	2700	4000	38	10	4.0	1.5	16	41
750	47	56	28	3.5	K302_0040 EZ702U	160	290	4.000	4/1	2700	2700	4000	19	10	4.0	1.5	16	33
750	52	62	31	3.1	K302_0040 EZ505U	230	290	4.000	4/1	2700	2700	4000	17	10	4.0	1.5	16	33
750	64	81	38	2.5	K302_0040 EZ703U	230	290	4.000	4/1	2700	2700	4000	27	10	4.0	1.5	16	35
750	83	117	50	2.0	K302_0040 EZ705U	310	700	4.000	4/1	2700	2700	4000	39	10	4.0	1.5	16	41
K3 (n_{1N} = 4500 rpm, $M_{2acc,max}$ = 390 Nm)																		
260	159	257	22	1.4	K302_0175 EZ505U	390	700	17.29	1591/92	3500	3500	5000	13	10	4.0	1.5	16	33
266	156	251	22	1.5	K302_0170 EZ505U	390	700	16.94	559/33	3800	3800	6000	13	10	4.0	1.5	16	33
323	128	207	23	1.7	K302_0140 EZ505U	390	700	13.94	1505/108	3500	3500	5000	13	10	4.0	1.5	16	33
323	164	270	29	1.3	K302_0140 EZ703U	390	700	13.94	1505/108	3500	3500	5000	23	10	4.0	1.5	16	35
358	116	187	23	1.8	K302_0125 EZ505U	390	700	12.58	3182/253	3500	3500	5000	13	10	4.0	1.5	16	33
358	148	244	29	1.4	K302_0125 EZ703U	390	700	12.58	3182/253	3500	3500	5000	22	10	4.0	1.5	16	35
388	107	172	23	1.9	K302_0115 EZ505U	390	700	11.61	1161/100	3200	3200	4500	14	10	4.0	1.5	16	33
388	136	225	30	1.5	K302_0115 EZ703U	390	700	11.61	1161/100	3200	3200	4500	23	10	4.0	1.5	16	35
444	93	150	23	2.1	K302_0100 EZ505U	390	700	10.14	3010/297	3500	3500	5000	13	10	4.0	1.5	16	33
444	119	197	30	1.6	K302_0100 EZ703U	390	700	10.14	3010/297	3500	3500	5000	23	10	4.0	1.5	16	35
486	85	138	24	2.2	K302_0093 EZ505U	390	670	9.267	1075/116	3200	3200	4500	14	10	4.0	1.5	16	33
486	109	180	30	1.7	K302_0093 EZ703U	390	670	9.267	1075/116	3200	3200	4500	24	10	4.0	1.5	16	35
533	78	125	24	2.3	K302_0084 EZ505U	390	610	8.444	2322/275	3200	3200	4500	14	10	4.0	1.5	16	33
533	99	164	30	1.8	K302_0084 EZ703U	390	610	8.444	2322/275	3200	3200	4500	23	10	4.0	1.5	16	35
668	62	100	24	2.7	K302_0067 EZ505U	360	490	6.740	2150/319	3200	3200	4500	14	10	4.0	1.5	16	33
668	79	131	31	2.1	K302_0067 EZ703U	360	490	6.740	2150/319	3200	3200	4500	24	10	4.0	1.5	16	35
K3 (n_{1N} = 6000 rpm, $M_{2acc,max}$ = 390 Nm)																		
33	260	291	4.2	1.3	K303_1810 EZ302U	390	690	181.0	86903/480	3800	3800	6000	0.35	10	5.0	2.5	16	29
44	195	218	4.2	1.7	K303_1360 EZ302U	390	700	136.0	14147/104	3800	3800	6000	0.35	10	5.0	2.5	16	29
44	255	293	5.5	1.3	K303_1360 EZ303U	390	700	136.0	14147/104	3800	3800	6000	0.46	10	5.0	2.5	16	30
55	157	175	4.1	2.0	K303_1090 EZ302U	390	700	109.2	167743/1536	3800	3800	6000	0.36	10	5.0	2.5	16	29
55	205	235	5.3	1.5	K303_1090 EZ303U	390	700	109.2	167743/1536	3800	3800	6000	0.47	10	5.0	2.5	16	30
55	240	292	6.3	1.3	K303_1090 EZ401U	390	700	109.2	167743/1536	3800	3800	6000	1.0	10	5.0	2.5	16	31
66	131	147	4.2	2.2	K303_0910 EZ302U	390	580	91.23	26273/288	3800	3800	6000	0.37	10	5.0	2.5	16	29
66	171	196	5.4	1.7	K303_0910 EZ303U	390	580	91.23	26273/288	3800	3800	6000	0.48	10	5.0	2.5	16	30
66	201	244	6.4	1.5	K303_0910 EZ401U	390	580	91.23	26273/288	3800	3800	6000	1.0	10	5.0	2.5	16	31
76	114	128	5.2	2.0	K303_0790 EZ302U	380	510	79.42	167743/2112	3800	3800	6000	0.36	10	5.0	2.5	16	29
76	149	171	6.8	1.5	K303_0790 EZ303U	390	510	79.42	167743/2112	3800	3800	6000	0.47	10	5.0	2.5	16	30
76	175	213	8.0	1.3	K303_0790 EZ401U	390	510	79.42	167743/2112	3800	3800	6000	1.0	10	5.0	2.5	16	31
86	101	113	5.5	2.1	K302_0690 EZ302U	240	300	69.43	6665/96	3800	3800	6000	0.37	10	4.0	1.5	16	24
86	132	152	7.1	1.6	K302_0690 EZ303U	240	300	69.43	6665/96	3800	3800	6000	0.48	10	4.0	1.5	16	25
89	97	109	4.2	2.8	K303_0680 EZ302U	320	430	67.73	74777/1104	3800	3800	6000	0.38	10	5.0	2.5	16	29
89	127	146	5.4	2.1	K303_0680 EZ303U	350	430	67.73	74777/1104	3800	3800	6000	0.49	10	5.0	2.5	16	30
89	149	181	6.4	1.8	K303_0680 EZ401U	350	430	67.73	74777/1104	3800	3800	6000	1.0	10	5.0	2.5	16	31
90	217	281	7.8	1.5	K303_0670 EZ501U	390	700	66.87	46139/690	3800	3800	6000	3.1	10	5.0	2.5	16	32
90	95	107	5.3	2.2	K303_0660 EZ302U	320	430	66.35	26273/396	3800	3800	6000	0.37	10	5.0	2.5	16	29
90	124	143	6.9	1.7	K303_0660 EZ303U	340	430	66.35	26273/396	3800	3800	6000	0.48	10	5.0	2.5	16	30
90	146	178	8.1	1.5	K303_0660 EZ401U	340	430	66.35	26273/396	3800	3800	6000	1.0	10	5.0	2.5	16	31
92	213	276	7.8	1.5	K303_0650 EZ501U	390	700	65.50	32422/495	3800	3800	6000	3.1	10	5.0	2.5	16	32
108	124	151	6.3	2.1	K302_0560 EZ401U	320	530	55.71	2451/44	3800	3800	6000	1.0	10	4.0	1.5	16	26
108	184	238	9.4	1.4	K302_0560 EZ501U	320	530	55.71	2451/44	3800	3800	6000	3.0	10	4.0	1.5	16	27
110	78	88	4.2	3.2	K303_0550 EZ302U	260	350	54.58	70735/1296	3800	3800	6000	0.40	10	5.0	2.5	16	29
110	102	117	5.5	2.5	K303_0550 EZ303U	280	350	54.58	70735/1296	3800	3800	6000	0.51	10	5.0	2.5	16	30
110	120	146	6.5	2.1	K303_0550 EZ401U	280	350	54.58	70735/1296	3800	3800	6000	1.0	10	5.0	2.5	16	31
111	175	227	7.9	1.7	K303_0540 EZ501U	390	700	53.88	8729/162	3800	3800	6000	3.1	10	5.0	2.5	16	32
119	73	82	6.9	2.1	K302_0500 EZ302U	170	220	50.49	6665/132	3800	3800	6000	0.37	10	4.0	1.5	16	24
119	96	110	9.1	1.6	K302_0500 EZ303U	170	220	50.49	6665/132	3800	3800	6000	0.48	10	4.0	1.5	16	25
122	71	79	5.3	2.8	K303_0490 EZ302U	240	320	49.26	74777/1518	3800	3800	6000	0.39	10	5.0	2.5	16	29
122	92	106	6.9	2.1	K303_0490 EZ303U	250	320	49.26	74777/1518	3800	3800	6000	0.50	10	5.0	2.5	16	30
122	108	132	8.1	1.8	K303_0490 EZ401U	250	320	49.26	74777/1518	3800	3800	6000	1.0	10	5.0	2.5	16	31
123	158	205	8.0	1.9	K303_0490 EZ501U	390	700	48.63	184556/3795	3800	3800	6000	3.1	10	5.0	2.5	16	32
130	103	126	5.5	2.8	K302_0460 EZ401U	380	690	46.23	1849/40	3800	3800	6000	1.1	10	4.0	1.5	16	26
130	152	197	8.2	1.9	K302_0460 EZ501U	390	690	46.23	1849/40	3800	3800	6000	3.1	10	4.0	1.5	16	27
130	157	220	8.4	1.8	K302_0460 EZ402U	390	690	46.23	1849/40	3800	3800	6000	1.8	10	4.0	1.5	16	27

n_{2N} [rpm]	M_{2N} [Nm]	$M_{2,0}$ [Nm]	a_{th}	S	Type	M_{2acc} [Nm]	M_{2NOT} [Nm]	i	i_{exakt}	n_{1maxDB} EL1,2 [rpm]	n_{1maxDB} EL3,4,5,6 [rpm]	n_{1maxZB} [rpm]	J_1 [kgcm²]	$\Delta\varphi_2$ [arcmin]	$\Delta\varphi_{2redII}$ [arcmin]	$\Delta\varphi_{2redI}$ [arcmin]	C_2 [Nm/arcmin]	m [kg]
K3 (n_{1N} = 6000 rpm, $M_{2acc,max}$ = 390 Nm)																		
134	146	189	8.1	2.0	K303_0450 EZ501U	390	700	44.89	11223/250	3800	3800	6000	3.1	10	5.0	2.5	16	32
148	90	110	8.0	2.1	K302_0410 EZ401U	230	390	40.51	4902/121	3800	3800	6000	1.1	10	4.0	1.5	16	26
148	134	173	12	1.4	K302_0410 EZ501U	230	390	40.51	4902/121	3800	3800	6000	3.0	10	4.0	1.5	16	27
153	127	165	8.1	2.2	K303_0390 EZ501U	390	690	39.19	34916/891	3800	3800	6000	3.1	10	5.0	2.5	16	32
153	195	292	12	1.4	K303_0390 EZ502U	390	690	39.19	34916/891	3800	3800	6000	5.4	10	5.0	2.5	16	34
167	116	151	8.2	2.3	K303_0360 EZ501U	390	630	35.83	215/6	3800	3800	6000	3.2	10	5.0	2.5	16	32
167	178	267	13	1.5	K303_0360 EZ502U	390	630	35.83	215/6	3800	3800	6000	5.5	10	5.0	2.5	16	34
173	77	94	5.6	3.4	K302_0350 EZ401U	290	700	34.73	903/26	3800	3800	6000	1.2	10	4.0	1.5	16	26
173	115	148	8.3	2.3	K302_0350 EZ501U	390	700	34.73	903/26	3800	3800	6000	3.2	10	4.0	1.5	16	27
173	118	165	8.6	2.2	K302_0350 EZ402U	390	700	34.73	903/26	3800	3800	6000	1.9	10	4.0	1.5	16	27
173	175	263	13	1.5	K302_0350 EZ502U	390	700	34.73	903/26	3800	3800	6000	5.5	10	4.0	1.5	16	29
173	175	266	13	1.5	K302_0350 EZ701U	390	700	34.73	903/26	3800	3800	6000	8.8	10	4.0	1.5	16	31
173	195	283	14	1.4	K302_0350 EZ404U	390	700	34.73	903/26	3800	3800	6000	3.2	10	4.0	1.5	16	29
178	75	91	5.9	3.3	K302_0340 EZ401U	280	500	33.62	1849/55	3800	3800	6000	1.1	10	4.0	1.5	16	26
178	111	143	8.7	2.3	K302_0340 EZ501U	300	500	33.62	1849/55	3800	3800	6000	3.1	10	4.0	1.5	16	27
178	114	160	9.0	2.2	K302_0340 EZ402U	300	500	33.62	1849/55	3800	3800	6000	1.8	10	4.0	1.5	16	27
184	106	137	8.3	2.4	K303_0330 EZ501U	390	580	32.65	44892/1375	3800	3800	6000	3.1	10	5.0	2.5	16	32
184	162	243	13	1.6	K303_0330 EZ502U	390	580	32.65	44892/1375	3800	3800	6000	5.4	10	5.0	2.5	16	34
215	62	76	5.8	3.9	K302_0280 EZ401U	230	700	27.88	3569/128	3800	3800	6000	1.3	10	4.0	1.5	16	26
215	92	119	8.5	2.7	K302_0280 EZ501U	390	700	27.88	3569/128	3800	3800	6000	3.3	10	4.0	1.5	16	27
215	95	133	8.8	2.6	K302_0280 EZ402U	390	700	27.88	3569/128	3800	3800	6000	2.0	10	4.0	1.5	16	27
215	141	211	13	1.7	K302_0280 EZ502U	390	700	27.88	3569/128	3800	3800	6000	5.6	10	4.0	1.5	16	29
215	141	214	13	1.7	K302_0280 EZ701U	390	700	27.88	3569/128	3800	3800	6000	8.9	10	4.0	1.5	16	31
215	157	227	15	1.6	K302_0280 EZ404U	390	700	27.88	3569/128	3800	3800	6000	3.3	10	4.0	1.5	16	29
215	168	287	16	1.5	K302_0280 EZ503U	390	700	27.88	3569/128	3800	3800	6000	7.9	10	4.0	1.5	16	30
238	56	69	5.8	4.2	K302_0250 EZ401U	210	600	25.26	3612/143	3800	3800	6000	1.2	10	4.0	1.5	16	26
238	83	108	8.6	2.8	K302_0250 EZ501U	390	600	25.26	3612/143	3800	3800	6000	3.2	10	4.0	1.5	16	27
238	86	120	8.8	2.8	K302_0250 EZ402U	390	600	25.26	3612/143	3800	3800	6000	1.9	10	4.0	1.5	16	27
238	127	191	13	1.9	K302_0250 EZ502U	390	600	25.26	3612/143	3800	3800	6000	5.5	10	4.0	1.5	16	29
238	127	194	13	1.9	K302_0250 EZ701U	390	600	25.26	3612/143	3800	3800	6000	8.8	10	4.0	1.5	16	31
238	142	206	15	1.7	K302_0250 EZ404U	390	600	25.26	3612/143	3800	3800	6000	3.3	10	4.0	1.5	16	29
238	152	260	16	1.6	K302_0250 EZ503U	390	600	25.26	3612/143	3800	3800	6000	7.9	10	4.0	1.5	16	30
258	52	63	5.8	4.4	K302_0230 EZ401U	190	640	23.29	559/24	3800	3800	6000	1.4	10	4.0	1.5	16	26
258	77	99	8.6	3.0	K302_0230 EZ501U	360	640	23.29	559/24	3800	3800	6000	3.4	10	4.0	1.5	16	27
258	79	111	8.9	2.9	K302_0230 EZ402U	360	640	23.29	559/24	3800	3800	6000	2.1	10	4.0	1.5	16	27
258	117	176	13	2.0	K302_0230 EZ502U	390	640	23.29	559/24	3800	3800	6000	5.7	10	4.0	1.5	16	29
258	117	178	13	2.0	K302_0230 EZ701U	390	700	23.29	559/24	3800	3800	6000	9.0	10	4.0	1.5	16	31
258	131	190	15	1.8	K302_0230 EZ404U	390	640	23.29	559/24	3800	3800	6000	3.5	10	4.0	1.5	16	29
258	140	239	16	1.6	K302_0230 EZ503U	390	640	23.29	559/24	3800	3800	6000	8.1	10	4.0	1.5	16	30
296	45	55	5.9	4.9	K302_0200 EZ401U	170	510	20.28	3569/176	3800	3800	6000	1.3	10	4.0	1.5	16	26
296	67	87	8.7	3.3	K302_0200 EZ501U	310	510	20.28	3569/176	3800	3800	6000	3.3	10	4.0	1.5	16	27
296	69	96	9.0	3.2	K302_0200 EZ402U	310	510	20.28	3569/176	3800	3800	6000	2.0	10	4.0	1.5	16	27
296	102	153	13	2.2	K302_0200 EZ502U	390	510	20.28	3569/176	3800	3800	6000	5.6	10	4.0	1.5	16	29
296	102	155	13	2.2	K302_0200 EZ701U	390	700	20.28	3569/176	3800	3800	6000	8.9	10	4.0	1.5	16	31
296	114	165	15	1.9	K302_0200 EZ404U	390	510	20.28	3569/176	3800	3800	6000	3.4	10	4.0	1.5	16	29
296	122	208	16	1.8	K302_0200 EZ503U	390	510	20.28	3569/176	3800	3800	6000	8.0	10	4.0	1.5	16	30
296	142	281	18	1.6	K302_0200 EZ702U	390	700	20.28	3569/176	3800	3800	6000	14	10	4.0	1.5	16	33
354	56	72	8.9	3.7	K302_0170 EZ501U	260	470	16.94	559/33	3800	3800	6000	3.4	10	4.0	1.5	16	27
354	58	81	9.1	3.6	K302_0170 EZ402U	260	470	16.94	559/33	3800	3800	6000	2.2	10	4.0	1.5	16	27
354	85	128	14	2.4	K302_0170 EZ502U	380	470	16.94	559/33	3800	3800	6000	5.7	10	4.0	1.5	16	29
354	85	130	14	2.4	K302_0170 EZ701U	330	700	16.94	559/33	3800	3800	6000	9.0	10	4.0	1.5	16	31
354	95	138	15	2.2	K302_0170 EZ404U	380	470	16.94	559/33	3800	3800	6000	3.5	10	4.0	1.5	16	29
354	102	174	16	2.0	K302_0170 EZ503U	380	470	16.94	559/33	3800	3800	6000	8.1	10	4.0	1.5	16	30
354	118	235	19	1.8	K302_0170 EZ702U	390	700	16.94	559/33	3800	3800	6000	14	10	4.0	1.5	16	33
K4 (n_{1N} = 2000 rpm, $M_{2acc,max}$ = 520 Nm)																		
333	254	385	63	1.3	K402_0060 EZ805U	520	1100	6.000	6/1	2600	2600	3800	139	10	4.0	1.5	31	82
369	230	348	63	1.3	K402_0054 EZ805U	510	1050	5.422	1849/341	2600	2600	3800	139	10	4.0	1.5	31	82
458	185	280	64	1.5	K402_0044 EZ805U	470	850	4.364	48/11	2600	2600	3800	141	10	4.0	1.5	31	82
500	170	256	65	1.6	K402_0040 EZ805U	460	780	4.000	4/1	2600	2600	3800	142	10	4.0	1.5	31	82
K4 (n_{1N} = 3000 rpm, $M_{2acc,max}$ = 600 Nm)																		
14	332	350	4.1	1.3	K403_2180 EZ302U	510	850	218.2	38399/176	3600	3600	5500	0.35	10	5.0	2.5	31	42
17	276	291	3.4	1.8	K403_1810 EZ302U	600	980	181.4	14147/78	3600	3600	5500	0.35	10	5.0	2.5	31	42
17	359	380	4.4	1.4	K403_1810 EZ303U	600	980	181.4	14147/78	3600	3600	5500	0.46	10	5.0	2.5	31	43
22	207	219	3.4	2.2	K403_1360 EZ302U	600	810	136.1	196037/1440	3600	3600	5500	0.36	10	5.0	2.5	31	42

n_{2N} [rpm]	M_{2N} [Nm]	$M_{2,0}$ [Nm]	a_{th}	S	Type	M_{2acc} [Nm]	M_{2NOT} [Nm]	i	i_{exakt}	n_{1maxDB} EL1,2 [rpm]	n_{1maxDB} EL3,4,5,6 [rpm]	n_{1maxZB} [rpm]	J_1 [kgcm²]	$\Delta\varphi_2$ [arcmin]	$\Delta\varphi_{2redII}$ [arcmin]	$\Delta\varphi_{2redI}$ [arcmin]	C_2 [Nm/ arcmin]	m [kg]
K4 (n_{1N} = 3000 rpm, $M_{2acc,max}$ = 600 Nm)																		
22	269	285	4.4	1.7	K403_1360 EZ303U	600	810	136.1	196037/1440	3600	3600	5500	0.47	10	5.0	2.5	31	43
22	364	390	5.9	1.3	K403_1360 EZ401U	600	810	136.1	196037/1440	3600	3600	5500	1.0	10	5.0	2.5	31	44
28	165	175	3.3	2.7	K403_1090 EZ302U	520	700	108.8	62651/576	3600	3600	5500	0.38	10	5.0	2.5	31	42
28	215	228	4.4	2.0	K403_1090 EZ303U	560	700	108.8	62651/576	3600	3600	5500	0.49	10	5.0	2.5	31	43
28	291	312	5.9	1.5	K403_1090 EZ401U	560	700	108.8	62651/576	3600	3600	5500	1.0	10	5.0	2.5	31	44
33	139	147	3.4	3.0	K403_0910 EZ302U	440	580	91.23	26273/288	3600	3600	5500	0.39	10	5.0	2.5	31	42
33	181	191	4.4	2.3	K403_0910 EZ303U	470	580	91.23	26273/288	3600	3600	5500	0.50	10	5.0	2.5	31	43
33	244	262	5.9	1.7	K403_0910 EZ401U	470	580	91.23	26273/288	3600	3600	5500	1.0	10	5.0	2.5	31	44
33	370	405	6.9	1.5	K403_0900 EZ501U	600	1100	90.06	16211/180	3600	3600	5500	3.1	10	5.0	2.5	31	45
38	120	127	4.2	2.7	K403_0790 EZ302U	380	510	79.11	62651/792	3600	3600	5500	0.38	10	5.0	2.5	31	42
38	157	166	5.5	2.0	K403_0790 EZ303U	410	510	79.11	62651/792	3600	3600	5500	0.49	10	5.0	2.5	31	43
38	212	227	7.5	1.5	K403_0790 EZ401U	410	510	79.11	62651/792	3600	3600	5500	1.0	10	5.0	2.5	31	44
38	321	351	6.7	1.7	K403_0780 EZ501U	600	1100	78.10	38657/495	3600	3600	5500	3.1	10	5.0	2.5	31	45
43	289	316	9.7	1.3	K402_0690 EZ501U	440	740	69.34	5547/80	3600	3600	5500	3.0	10	4.0	1.5	31	41
45	277	302	6.4	2.0	K403_0670 EZ501U	600	1100	67.30	21199/315	3600	3600	5500	3.1	10	5.0	2.5	31	45
45	101	107	4.3	3.0	K403_0660 EZ302U	320	430	66.35	26273/396	3600	3600	5500	0.40	10	5.0	2.5	31	42
45	131	139	5.6	2.3	K403_0660 EZ303U	340	430	66.35	26273/396	3600	3600	5500	0.51	10	5.0	2.5	31	43
45	178	190	7.5	1.7	K403_0660 EZ401U	340	430	66.35	26273/396	3600	3600	5500	1.0	10	5.0	2.5	31	44
46	269	294	6.4	2.0	K403_0650 EZ501U	600	1010	65.50	32422/495	3600	3600	5500	3.1	10	5.0	2.5	31	45
54	232	254	8.1	1.8	K402_0560 EZ501U	510	850	55.71	2451/44	3600	3600	5500	3.1	10	4.0	1.5	31	41
56	221	241	6.1	2.5	K403_0540 EZ501U	600	950	53.69	38657/720	3600	3600	5500	3.2	10	5.0	2.5	31	45
56	380	411	10	1.4	K403_0540 EZ502U	600	950	53.69	38657/720	3600	3600	5500	5.5	10	5.0	2.5	31	46
59	210	230	12	1.3	K402_0500 EZ501U	320	540	50.43	5547/110	3600	3600	5500	3.0	10	4.0	1.5	31	41
61	201	220	5.9	2.7	K403_0490 EZ501U	600	860	48.94	169592/3465	3600	3600	5500	3.1	10	5.0	2.5	31	45
61	346	374	10	1.6	K403_0490 EZ502U	600	860	48.94	169592/3465	3600	3600	5500	5.4	10	5.0	2.5	31	46
65	193	211	6.1	2.8	K402_0460 EZ501U	600	980	46.31	602/13	3600	3600	5500	3.2	10	4.0	1.5	31	41
65	332	359	11	1.6	K402_0460 EZ502U	600	980	46.31	602/13	3600	3600	5500	5.5	10	4.0	1.5	31	42
65	332	373	11	1.6	K402_0460 EZ701U	600	980	46.31	602/13	3600	3600	5500	8.8	10	4.0	1.5	31	44
67	183	200	5.9	3.0	K403_0450 EZ501U	600	790	44.54	1247/28	3600	3600	5500	3.2	10	5.0	2.5	31	45
67	315	341	10	1.7	K403_0450 EZ502U	600	790	44.54	1247/28	3600	3600	5500	5.5	10	5.0	2.5	31	46
74	169	185	10	1.8	K402_0410 EZ501U	370	620	40.51	4902/121	3600	3600	5500	3.1	10	4.0	1.5	31	41
77	161	175	6.1	3.1	K403_0390 EZ501U	550	690	39.05	38657/990	3600	3600	5500	3.2	10	5.0	2.5	31	45
77	276	299	11	1.8	K403_0390 EZ502U	550	690	39.05	38657/990	3600	3600	5500	5.5	10	5.0	2.5	31	46
77	362	414	14	1.4	K403_0390 EZ503U	550	690	39.05	38657/990	3600	3600	5500	7.9	10	5.0	2.5	31	48
84	147	161	6.0	3.4	K403_0360 EZ501U	500	630	35.72	13717/384	3600	3600	5500	3.3	10	5.0	2.5	31	45
84	253	273	10	2.0	K403_0360 EZ502U	500	630	35.72	13717/384	3600	3600	5500	5.6	10	5.0	2.5	31	46
84	331	379	14	1.5	K403_0360 EZ503U	500	630	35.72	13717/384	3600	3600	5500	8.0	10	5.0	2.5	31	48
86	145	158	6.1	3.4	K402_0350 EZ501U	540	810	34.76	4171/120	3600	3600	5500	3.4	10	4.0	1.5	31	41
86	249	270	10	2.0	K402_0350 EZ502U	600	810	34.76	4171/120	3600	3600	5500	5.7	10	4.0	1.5	31	42
86	249	280	10	2.0	K402_0350 EZ701U	600	1100	34.76	4171/120	3600	3600	5500	9.0	10	4.0	1.5	31	44
86	327	374	14	1.5	K402_0350 EZ503U	600	810	34.76	4171/120	3600	3600	5500	8.0	10	4.0	1.5	31	44
89	140	154	7.8	2.8	K402_0340 EZ501U	470	710	33.68	4816/143	3600	3600	5500	3.2	10	4.0	1.5	31	41
89	242	261	13	1.6	K402_0340 EZ502U	470	710	33.68	4816/143	3600	3600	5500	5.5	10	4.0	1.5	31	42
89	242	271	13	1.6	K402_0340 EZ701U	470	710	33.68	4816/143	3600	3600	5500	8.8	10	4.0	1.5	31	44
93	133	146	6.4	3.4	K403_0320 EZ501U	460	570	32.39	2494/77	3600	3600	5500	3.2	10	5.0	2.5	31	45
93	229	248	11	2.0	K403_0320 EZ502U	460	570	32.39	2494/77	3600	3600	5500	5.5	10	5.0	2.5	31	46
93	300	344	14	1.5	K403_0320 EZ503U	460	570	32.39	2494/77	3600	3600	5500	7.9	10	5.0	2.5	31	48
108	116	127	6.2	4.0	K402_0280 EZ501U	430	750	27.77	1333/48	3600	3600	5500	3.6	10	4.0	1.5	31	41
108	199	216	11	2.3	K402_0280 EZ502U	600	750	27.77	1333/48	3600	3600	5500	5.9	10	4.0	1.5	31	42
108	199	224	11	2.3	K402_0280 EZ701U	540	1100	27.77	1333/48	3600	3600	5500	9.2	10	4.0	1.5	31	44
108	261	299	14	1.8	K402_0280 EZ503U	600	750	27.77	1333/48	3600	3600	5500	8.2	10	4.0	1.5	31	44
108	323	388	17	1.4	K402_0280 EZ702U	600	1100	27.77	1333/48	3600	3600	5500	14	10	4.0	1.5	31	47
108	364	431	19	1.3	K402_0280 EZ505U	600	1100	27.77	1333/48	3600	3600	5500	13	10	4.0	1.5	31	47
119	105	115	6.3	4.3	K402_0250 EZ501U	390	590	25.28	4171/165	3600	3600	5500	3.4	10	4.0	1.5	31	41
119	181	196	11	2.5	K402_0250 EZ502U	470	590	25.28	4171/165	3600	3600	5500	5.7	10	4.0	1.5	31	42
119	181	204	11	2.5	K402_0250 EZ701U	490	1000	25.28	4171/165	3600	3600	5500	9.0	10	4.0	1.5	31	44
119	238	272	14	1.9	K402_0250 EZ503U	470	590	25.28	4171/165	3600	3600	5500	8.1	10	4.0	1.5	31	44
119	294	353	17	1.5	K402_0250 EZ702U	600	1000	25.28	4171/165	3600	3600	5500	14	10	4.0	1.5	31	47
119	331	392	20	1.4	K402_0250 EZ505U	600	1000	25.28	4171/165	3600	3600	5500	13	10	4.0	1.5	31	47
129	97	106	6.3	4.5	K402_0230 EZ501U	360	680	23.29	559/24	3600	3600	5500	3.8	10	4.0	1.5	31	41
129	167	181	11	2.6	K402_0230 EZ502U	540	680	23.29	559/24	3600	3600	5500	6.1	10	4.0	1.5	31	42
129	167	188	11	2.6	K402_0230 EZ701U	450	1100	23.29	559/24	3600	3600	5500	9.4	10	4.0	1.5	31	44
129	219	251	14	2.0	K402_0230 EZ503U	540	680	23.29	559/24	3600	3600	5500	8.4	10	4.0	1.5	31	44
129	271	325	18	1.6	K402_0230 EZ702U	600	1100	23.29	559/24	3600	3600	5500	15	10	4.0	1.5	31	47

n_{2N} [rpm]	M_{2N} [Nm]	$M_{2,0}$ [Nm]	a_{th}	S	Type	M_{2acc} [Nm]	M_{2NOT} [Nm]	i	i_{exakt}	n_{1maxDB} EL1,2 [rpm]	n_{1maxDB} EL3,4,5,6 [rpm]	n_{1maxZB} [rpm]	J_1 [kgcm²]	$\Delta\varphi_2$ [arcmin]	$\Delta\varphi_{2redII}$ [arcmin]	$\Delta\varphi_{2redI}$ [arcmin]	C_2 [Nm/ arcmin]	m [kg]
K4 (n_{1N} = 3000 rpm, $M_{2acc,max}$ = 600 Nm)																		
129	305	361	20	1.4	K402_0230 EZ505U	600	1100	23.29	559/24	3600	3600	5500	13	10	4.0	1.5	31	47
149	84	92	6.4	4.9	K402_0200 EZ501U	310	540	20.20	1333/66	3600	3600	5500	3.6	10	4.0	1.5	31	41
149	145	157	11	2.9	K402_0200 EZ502U	430	540	20.20	1333/66	3600	3600	5500	5.9	10	4.0	1.5	31	42
149	145	163	11	2.9	K402_0200 EZ701U	390	1100	20.20	1333/66	3600	3600	5500	9.2	10	4.0	1.5	31	44
149	190	217	14	2.2	K402_0200 EZ503U	430	540	20.20	1333/66	3600	3600	5500	8.3	10	4.0	1.5	31	44
149	235	282	18	1.8	K402_0200 EZ702U	600	1100	20.20	1333/66	3600	3600	5500	14	10	4.0	1.5	31	47
149	264	313	20	1.6	K402_0200 EZ505U	600	1100	20.20	1333/66	3600	3600	5500	13	10	4.0	1.5	31	47
149	323	407	24	1.3	K402_0200 EZ703U	600	1100	20.20	1333/66	3600	3600	5500	22	10	4.0	1.5	31	49
172	125	140	11	3.2	K402_0175 EZ701U	340	1100	17.41	731/42	3400	3400	5000	9.9	10	4.0	1.5	31	44
172	203	243	18	2.0	K402_0175 EZ702U	600	1100	17.41	731/42	3400	3400	5000	15	10	4.0	1.5	31	47
172	228	270	20	1.7	K402_0175 EZ505U	600	1100	17.41	731/42	3400	3400	5000	14	10	4.0	1.5	31	47
172	279	351	25	1.4	K402_0175 EZ703U	600	1100	17.41	731/42	3400	3400	5000	23	10	4.0	1.5	31	49
177	122	131	11	3.2	K402_0170 EZ502U	390	490	16.94	559/33	3600	3600	5500	6.2	10	4.0	1.5	31	42
177	122	136	11	3.2	K402_0170 EZ701U	330	1010	16.94	559/33	3600	3600	5500	9.5	10	4.0	1.5	31	44
177	159	182	15	2.5	K402_0170 EZ503U	390	490	16.94	559/33	3600	3600	5500	8.5	10	4.0	1.5	31	44
177	197	237	18	2.0	K402_0170 EZ702U	600	1010	16.94	559/33	3600	3600	5500	15	10	4.0	1.5	31	47
177	222	263	20	1.8	K402_0170 EZ505U	600	1010	16.94	559/33	3600	3600	5500	13	10	4.0	1.5	31	47
177	271	342	25	1.4	K402_0170 EZ703U	600	1010	16.94	559/33	3600	3600	5500	23	10	4.0	1.5	31	49
216	100	112	11	3.7	K402_0140 EZ701U	270	1010	13.89	1333/96	3400	3400	5000	10	10	4.0	1.5	31	44
216	162	194	18	2.3	K402_0140 EZ702U	550	1010	13.89	1333/96	3400	3400	5000	16	10	4.0	1.5	31	47
216	182	215	21	2.0	K402_0140 EZ505U	600	1010	13.89	1333/96	3400	3400	5000	14	10	4.0	1.5	31	47
216	222	280	25	1.7	K402_0140 EZ703U	600	1010	13.89	1333/96	3400	3400	5000	24	10	4.0	1.5	31	49
216	287	407	33	1.3	K402_0140 EZ705U	600	1100	13.89	1333/96	3400	3400	5000	36	10	4.0	1.5	31	54
237	91	102	11	3.9	K402_0125 EZ701U	250	870	12.66	2924/231	3400	3400	5000	10	10	4.0	1.5	31	44
237	147	177	18	2.4	K402_0125 EZ702U	500	870	12.66	2924/231	3400	3400	5000	15	10	4.0	1.5	31	47
237	166	196	21	2.1	K402_0125 EZ505U	600	870	12.66	2924/231	3400	3400	5000	14	10	4.0	1.5	31	47
237	203	255	25	1.8	K402_0125 EZ703U	600	870	12.66	2924/231	3400	3400	5000	23	10	4.0	1.5	31	49
237	262	371	33	1.4	K402_0125 EZ705U	600	1100	12.66	2924/231	3400	3400	5000	36	10	4.0	1.5	31	54
237	274	456	34	1.3	K402_0125 EZ802U	600	1100	12.66	2924/231	3400	3400	5000	60	10	4.0	1.5	31	62
260	83	93	11	4.2	K402_0115 EZ701U	220	840	11.52	645/56	3000	3000	4500	11	10	4.0	1.5	31	44
260	134	161	19	2.6	K402_0115 EZ702U	460	840	11.52	645/56	3000	3000	4500	16	10	4.0	1.5	31	47
260	151	179	21	2.3	K402_0115 EZ505U	600	840	11.52	645/56	3000	3000	4500	15	10	4.0	1.5	31	47
260	184	232	26	1.9	K402_0115 EZ703U	600	840	11.52	645/56	3000	3000	4500	24	10	4.0	1.5	31	49
260	238	337	33	1.5	K402_0115 EZ705U	600	1100	11.52	645/56	3000	3000	4500	37	10	4.0	1.5	31	54
260	249	414	35	1.4	K402_0115 EZ802U	600	1100	11.52	645/56	3000	3000	4500	61	10	4.0	1.5	31	62
297	72	81	12	4.6	K402_0100 EZ701U	200	730	10.10	1333/132	3400	3400	5000	11	10	4.0	1.5	31	44
297	118	141	19	2.8	K402_0100 EZ702U	400	730	10.10	1333/132	3400	3400	5000	16	10	4.0	1.5	31	47
297	132	157	21	2.5	K402_0100 EZ505U	590	730	10.10	1333/132	3400	3400	5000	14	10	4.0	1.5	31	47
297	162	204	26	2.0	K402_0100 EZ703U	590	730	10.10	1333/132	3400	3400	5000	24	10	4.0	1.5	31	49
297	209	296	33	1.6	K402_0100 EZ705U	600	1100	10.10	1333/132	3400	3400	5000	36	10	4.0	1.5	31	54
297	218	363	35	1.5	K402_0100 EZ802U	600	1100	10.10	1333/132	3400	3400	5000	60	10	4.0	1.5	31	62
325	66	74	12	4.8	K402_0092 EZ701U	180	670	9.238	2365/256	3000	3000	4500	12	10	4.0	1.5	31	44
325	108	129	19	3.0	K402_0092 EZ702U	370	670	9.238	2365/256	3000	3000	4500	17	10	4.0	1.5	31	47
325	121	143	21	2.7	K402_0092 EZ505U	540	670	9.238	2365/256	3000	3000	4500	16	10	4.0	1.5	31	47
325	148	186	26	2.2	K402_0092 EZ703U	540	670	9.238	2365/256	3000	3000	4500	25	10	4.0	1.5	31	49
325	191	271	34	1.7	K402_0092 EZ705U	600	1100	9.238	2365/256	3000	3000	4500	38	10	4.0	1.5	31	54
325	200	332	35	1.6	K402_0092 EZ802U	600	1100	9.238	2365/256	3000	3000	4500	62	10	4.0	1.5	31	62
325	238	432	42	1.3	K402_0092 EZ803U	600	1100	9.238	2365/256	3000	3000	4500	87	10	4.0	1.5	31	68
358	98	117	19	3.2	K402_0084 EZ702U	330	610	8.377	645/77	3000	3000	4500	17	10	4.0	1.5	31	47
358	110	130	22	2.8	K402_0084 EZ505U	490	610	8.377	645/77	3000	3000	4500	15	10	4.0	1.5	31	47
358	134	169	26	2.3	K402_0084 EZ703U	490	610	8.377	645/77	3000	3000	4500	25	10	4.0	1.5	31	49
358	173	245	34	1.8	K402_0084 EZ705U	590	1100	8.377	645/77	3000	3000	4500	37	10	4.0	1.5	31	54
358	181	301	36	1.7	K402_0084 EZ802U	590	1100	8.377	645/77	3000	3000	4500	61	10	4.0	1.5	31	62
358	216	392	42	1.4	K402_0084 EZ803U	590	1100	8.377	645/77	3000	3000	4500	86	10	4.0	1.5	31	68
402	154	218	34	1.9	K402_0075 EZ705U	560	1100	7.456	1849/248	2600	2600	3800	39	10	4.0	1.5	31	54
402	161	268	36	1.9	K402_0075 EZ802U	560	1100	7.456	1849/248	2600	2600	3800	63	10	4.0	1.5	31	62
402	192	349	43	1.6	K402_0075 EZ803U	560	1100	7.456	1849/248	2600	2600	3800	88	10	4.0	1.5	31	68
446	78	94	19	3.7	K402_0067 EZ702U	270	490	6.719	215/32	3000	3000	4500	18	10	4.0	1.5	31	47
446	88	104	22	3.3	K402_0067 EZ505U	390	490	6.719	215/32	3000	3000	4500	16	10	4.0	1.5	31	47
446	108	136	27	2.7	K402_0067 EZ703U	390	490	6.719	215/32	3000	3000	4500	26	10	4.0	1.5	31	49
446	139	197	35	2.1	K402_0067 EZ705U	550	1100	6.719	215/32	3000	3000	4500	38	10	4.0	1.5	31	54
446	145	242	36	2.0	K402_0067 EZ802U	550	1100	6.719	215/32	3000	3000	4500	62	10	4.0	1.5	31	62
446	173	314	43	1.7	K402_0067 EZ803U	550	1100	6.719	215/32	3000	3000	4500	88	10	4.0	1.5	31	68
500	124	176	35	2.2	K402_0060 EZ705U	520	1100	6.000	6/1	2600	2600	3800	41	10	4.0	1.5	31	54

n_{2N} [rpm]	M_{2N} [Nm]	$M_{2,0}$ [Nm]	a_{th}	S	Type	M_{2acc} [Nm]	M_{2NOT} [Nm]	i	i_{exakt}	n_{1maxDB} EL1,2 [rpm]	n_{1maxDB} EL3,4,5,6 [rpm]	n_{1maxZB} [rpm]	J_1 [kgcm²]	$\Delta\varphi_2$ [arcmin]	$\Delta\varphi_{2redII}$ [arcmin]	$\Delta\varphi_{2redI}$ [arcmin]	C_2 [Nm/arcmin]	m [kg]
K4 (n_{1N} = 3000 rpm, $M_{2acc,max}$ = 600 Nm)																		
500	130	216	37	2.1	K402_0060 EZ802U	520	1100	6.000	6/1	2600	2600	3800	65	10	4.0	1.5	31	62
500	155	281	44	1.8	K402_0060 EZ803U	520	1100	6.000	6/1	2600	2600	3800	90	10	4.0	1.5	31	68
553	112	159	35	2.4	K402_0054 EZ705U	510	1050	5.422	1849/341	2600	2600	3800	40	10	4.0	1.5	31	54
553	117	195	37	2.3	K402_0054 EZ802U	510	1050	5.422	1849/341	2600	2600	3800	64	10	4.0	1.5	31	62
553	140	254	44	1.9	K402_0054 EZ803U	510	1050	5.422	1849/341	2600	2600	3800	89	10	4.0	1.5	31	68
687	90	128	36	2.8	K402_0044 EZ705U	440	850	4.364	48/11	2600	2600	3800	42	10	4.0	1.5	31	54
687	94	157	38	2.6	K402_0044 EZ802U	420	850	4.364	48/11	2600	2600	3800	66	10	4.0	1.5	31	62
687	113	204	45	2.2	K402_0044 EZ803U	470	850	4.364	48/11	2600	2600	3800	92	10	4.0	1.5	31	68
750	83	117	36	2.9	K402_0040 EZ705U	400	780	4.000	4/1	2600	2600	3800	44	10	4.0	1.5	31	54
750	87	144	38	2.8	K402_0040 EZ802U	390	780	4.000	4/1	2600	2600	3800	68	10	4.0	1.5	31	62
750	103	187	45	2.4	K402_0040 EZ803U	460	780	4.000	4/1	2600	2600	3800	93	10	4.0	1.5	31	68
K4 (n_{1N} = 4500 rpm, $M_{2acc,max}$ = 600 Nm)																		
162	256	412	16	1.6	K402_0280 EZ505U	600	1100	27.77	1333/48	3600	3600	5500	13	10	4.0	1.5	31	47
178	233	375	16	1.7	K402_0250 EZ505U	600	1000	25.28	4171/165	3600	3600	5500	13	10	4.0	1.5	31	47
193	215	346	16	1.8	K402_0230 EZ505U	600	1100	23.29	559/24	3600	3600	5500	13	10	4.0	1.5	31	47
193	273	452	20	1.4	K402_0230 EZ703U	600	1100	23.29	559/24	3600	3600	5500	22	10	4.0	1.5	31	49
223	186	300	16	2.0	K402_0200 EZ505U	600	1100	20.20	1333/66	3600	3600	5500	13	10	4.0	1.5	31	47
223	237	392	21	1.5	K402_0200 EZ703U	600	1100	20.20	1333/66	3600	3600	5500	22	10	4.0	1.5	31	49
259	160	258	16	2.2	K402_0175 EZ505U	600	1100	17.41	731/42	3400	3400	5000	14	10	4.0	1.5	31	47
259	204	338	21	1.7	K402_0175 EZ703U	600	1100	17.41	731/42	3400	3400	5000	23	10	4.0	1.5	31	49
266	156	251	16	2.2	K402_0170 EZ505U	600	1010	16.94	559/33	3600	3600	5500	13	10	4.0	1.5	31	47
266	199	329	21	1.7	K402_0170 EZ703U	600	1010	16.94	559/33	3600	3600	5500	23	10	4.0	1.5	31	49
324	128	206	17	2.5	K402_0140 EZ505U	600	1010	13.89	1333/96	3400	3400	5000	14	10	4.0	1.5	31	47
324	163	269	21	2.0	K402_0140 EZ703U	600	1010	13.89	1333/96	3400	3400	5000	24	10	4.0	1.5	31	49
324	221	404	29	1.5	K402_0140 EZ705U	600	1100	13.89	1333/96	3400	3400	5000	36	10	4.0	1.5	31	54
356	117	188	17	2.7	K402_0125 EZ505U	600	870	12.66	2924/231	3400	3400	5000	14	10	4.0	1.5	31	47
356	129	424	19	2.4	K402_0125 EZ802U	600	1100	12.66	2924/231	3400	3400	5000	60	10	4.0	1.5	31	62
356	149	246	21	2.1	K402_0125 EZ703U	600	870	12.66	2924/231	3400	3400	5000	23	10	4.0	1.5	31	49
356	201	368	29	1.5	K402_0125 EZ705U	600	1100	12.66	2924/231	3400	3400	5000	36	10	4.0	1.5	31	54
391	106	171	17	2.8	K402_0115 EZ505U	600	840	11.52	645/56	3000	3000	4500	15	10	4.0	1.5	31	47
391	117	385	19	2.6	K402_0115 EZ802U	600	1100	11.52	645/56	3000	3000	4500	61	10	4.0	1.5	31	62
391	135	223	22	2.2	K402_0115 EZ703U	600	840	11.52	645/56	3000	3000	4500	24	10	4.0	1.5	31	49
391	183	335	29	1.6	K402_0115 EZ705U	600	1100	11.52	645/56	3000	3000	4500	37	10	4.0	1.5	31	54
446	93	150	17	3.1	K402_0100 EZ505U	590	730	10.10	1333/132	3400	3400	5000	14	10	4.0	1.5	31	47
446	103	338	19	2.8	K402_0100 EZ802U	600	1100	10.10	1333/132	3400	3400	5000	60	10	4.0	1.5	31	62
446	119	196	22	2.4	K402_0100 EZ703U	590	730	10.10	1333/132	3400	3400	5000	24	10	4.0	1.5	31	49
446	161	294	29	1.8	K402_0100 EZ705U	600	1100	10.10	1333/132	3400	3400	5000	36	10	4.0	1.5	31	54
487	85	137	17	3.3	K402_0092 EZ505U	540	670	9.238	2365/256	3000	3000	4500	16	10	4.0	1.5	31	47
487	94	309	19	3.0	K402_0092 EZ802U	600	1100	9.238	2365/256	3000	3000	4500	62	10	4.0	1.5	31	62
487	108	179	22	2.6	K402_0092 EZ703U	540	670	9.238	2365/256	3000	3000	4500	25	10	4.0	1.5	31	49
487	147	269	30	1.9	K402_0092 EZ705U	600	1100	9.238	2365/256	3000	3000	4500	38	10	4.0	1.5	31	54
537	77	124	17	3.5	K402_0084 EZ505U	490	610	8.377	645/77	3000	3000	4500	15	10	4.0	1.5	31	47
537	85	280	19	3.2	K402_0084 EZ802U	590	1100	8.377	645/77	3000	3000	4500	61	10	4.0	1.5	31	62
537	98	163	22	2.8	K402_0084 EZ703U	490	610	8.377	645/77	3000	3000	4500	25	10	4.0	1.5	31	49
537	133	244	30	2.0	K402_0084 EZ705U	590	1100	8.377	645/77	3000	3000	4500	37	10	4.0	1.5	31	54
670	62	100	18	4.1	K402_0067 EZ505U	390	490	6.719	215/32	3000	3000	4500	16	10	4.0	1.5	31	47
670	68	225	20	3.7	K402_0067 EZ802U	550	1100	6.719	215/32	3000	3000	4500	62	10	4.0	1.5	31	62
670	79	130	23	3.2	K402_0067 EZ703U	390	490	6.719	215/32	3000	3000	4500	26	10	4.0	1.5	31	49
670	107	196	30	2.4	K402_0067 EZ705U	550	1100	6.719	215/32	3000	3000	4500	38	10	4.0	1.5	31	54
K5 (n_{1N} = 2000 rpm, $M_{2acc,max}$ = 1000 Nm)																		
173	483	731	47	1.5	K513_0115 EZ805U	1000	1800	11.57	10759/930	2300	2300	3600	141	10	5.0	2.0	50	87
197	424	641	48	1.7	K513_0100 EZ805U	1000	1800	10.15	203/20	1900	1900	3200	143	10	5.0	2.0	50	87
218	383	579	48	1.8	K513_0092 EZ805U	1000	1750	9.168	1421/155	1900	1900	3200	144	10	5.0	2.0	50	87
246	340	514	48	1.9	K513_0081 EZ805U	1000	1560	8.134	17081/2100	1900	1900	3200	147	10	5.0	2.0	50	87
272	307	464	48	2.1	K513_0073 EZ805U	1000	1400	7.347	551/75	1900	1900	3200	149	10	5.0	2.0	50	87
K5 (n_{1N} = 3000 rpm, $M_{2acc,max}$ = 1000 Nm)																		
18	681	744	8.4	1.3	K514_1680 EZ501U	1000	1800	168.2	841/5	3400	3400	5000	3.1	10	6.0	3.0	50	51
20	603	659	8.1	1.5	K514_1490 EZ501U	1000	1800	149.0	26071/175	3400	3400	5000	3.2	10	6.0	3.0	50	51
22	544	595	7.8	1.7	K514_1350 EZ501U	1000	1780	134.6	3364/25	3400	3400	5000	3.2	10	6.0	3.0	50	51
24	505	553	7.7	1.8	K514_1250 EZ501U	1000	1800	124.9	599633/4800	3400	3400	5000	3.2	10	6.0	3.0	50	51
27	457	499	7.4	2.0	K514_1130 EZ501U	1000	1660	112.8	135401/1200	3400	3400	5000	3.2	10	6.0	3.0	50	51
31	397	434	8.5	1.9	K513_0970 EZ501U	920	1460	96.64	38657/400	3400	3400	5000	3.2	10	5.0	2.0	50	47
32	381	416	7.0	2.4	K514_0940 EZ501U	1000	1620	94.15	338923/3600	3400	3400	5000	3.3	10	6.0	3.0	50	51

n_{2N} [rpm]	M_{2N} [Nm]	$M_{2,0}$ [Nm]	a_{th}	S	Type	M_{2acc} [Nm]	M_{2NOT} [Nm]	i	i_{exakt}	n_{1maxDB} EL1,2 [rpm]	n_{1maxDB} EL3,4,5,6 [rpm]	n_{1maxZB} [rpm]	J_1 [kgcm²]	$\Delta\varphi_2$ [arcmin]	$\Delta\varphi_{2redII}$ [arcmin]	$\Delta\varphi_{2redI}$ [arcmin]	C_2 [Nm/arcmin]	m [kg]
K5 (n_{1N} = 3000 rpm, $M_{2acc,max}$ = 1000 Nm)																		
32	656	709	12	1.4	K514_0940 EZ502U	1000	1620	94.15	338923/3600	3400	3400	5000	5.6	10	6.0	3.0	50	53
34	359	392	9.1	1.9	K513_0870 EZ501U	830	1320	87.29	8729/100	3400	3400	5000	3.2	10	5.0	2.0	50	47
35	344	376	6.8	2.6	K514_0850 EZ501U	1000	1470	85.03	76531/900	3400	3400	5000	3.3	10	6.0	3.0	50	51
35	592	640	12	1.5	K514_0850 EZ502U	1000	1470	85.03	76531/900	3400	3400	5000	5.6	10	6.0	3.0	50	53
39	319	349	6.7	2.8	K513_0780 EZ501U	1000	1410	77.59	26071/336	3400	3400	5000	3.3	10	5.0	2.0	50	47
39	549	593	12	1.6	K513_0780 EZ502U	1000	1410	77.59	26071/336	3400	3400	5000	5.6	10	5.0	2.0	50	48
39	549	616	12	1.6	K513_0780 EZ701U	1000	1410	77.59	26071/336	3400	3400	5000	8.9	10	5.0	2.0	50	50
43	288	315	7.2	2.8	K513_0700 EZ501U	980	1280	70.08	841/12	3400	3400	5000	3.4	10	5.0	2.0	50	47
43	496	536	12	1.7	K513_0700 EZ502U	980	1280	70.08	841/12	3400	3400	5000	5.7	10	5.0	2.0	50	48
43	496	556	12	1.7	K513_0700 EZ701U	980	1280	70.08	841/12	3400	3400	5000	9.0	10	5.0	2.0	50	50
43	650	744	16	1.3	K513_0700 EZ503U	980	1280	70.08	841/12	3400	3400	5000	8.0	10	5.0	2.0	50	50
46	265	290	6.4	3.4	K513_0650 EZ501U	990	1270	64.54	12586/195	3400	3400	5000	3.5	10	5.0	2.0	50	47
46	457	494	11	2.0	K513_0650 EZ502U	1000	1270	64.54	12586/195	3400	3400	5000	5.8	10	5.0	2.0	50	48
46	457	512	11	2.0	K513_0650 EZ701U	1000	1800	64.54	12586/195	3400	3400	5000	9.1	10	5.0	2.0	50	50
46	599	685	14	1.5	K513_0650 EZ503U	1000	1270	64.54	12586/195	3400	3400	5000	8.2	10	5.0	2.0	50	50
51	240	262	6.2	3.8	K513_0580 EZ501U	890	1150	58.30	11368/195	3400	3400	5000	3.5	10	5.0	2.0	50	47
51	412	446	11	2.2	K513_0580 EZ502U	920	1150	58.30	11368/195	3400	3400	5000	5.8	10	5.0	2.0	50	48
51	412	463	11	2.2	K513_0580 EZ701U	1000	1800	58.30	11368/195	3400	3400	5000	9.1	10	5.0	2.0	50	50
51	541	619	14	1.7	K513_0580 EZ503U	920	1150	58.30	11368/195	3400	3400	5000	8.2	10	5.0	2.0	50	50
62	198	216	6.1	4.4	K513_0480 EZ501U	740	1080	48.16	2697/56	3400	3400	5000	3.9	10	5.0	2.0	50	47
62	341	368	10	2.5	K513_0480 EZ502U	870	1080	48.16	2697/56	3400	3400	5000	6.2	10	5.0	2.0	50	48
62	341	382	10	2.6	K513_0480 EZ701U	920	1800	48.16	2697/56	3400	3400	5000	9.5	10	5.0	2.0	50	50
62	447	511	14	1.9	K513_0480 EZ503U	870	1080	48.16	2697/56	3400	3400	5000	8.6	10	5.0	2.0	50	50
62	553	663	16	1.6	K513_0480 EZ702U	1000	1800	48.16	2697/56	3400	3400	5000	15	10	5.0	2.0	50	52
62	622	737	18	1.4	K513_0480 EZ505U	1000	1800	48.16	2697/56	3400	3400	5000	13	10	5.0	2.0	50	52
69	179	195	6.5	4.4	K513_0440 EZ501U	670	980	43.50	87/2	3400	3400	5000	3.9	10	5.0	2.0	50	47
69	308	333	11	2.5	K513_0440 EZ502U	780	980	43.50	87/2	3400	3400	5000	6.2	10	5.0	2.0	50	48
69	308	345	9.8	2.9	K513_0440 EZ701U	830	1800	43.50	87/2	3400	3400	5000	9.5	10	5.0	2.0	50	50
69	403	462	15	1.9	K513_0440 EZ503U	780	980	43.50	87/2	3400	3400	5000	8.6	10	5.0	2.0	50	50
69	499	599	16	1.8	K513_0440 EZ702U	1000	1800	43.50	87/2	3400	3400	5000	15	10	5.0	2.0	50	52
69	561	665	18	1.6	K513_0440 EZ505U	1000	1800	43.50	87/2	3400	3400	5000	13	10	5.0	2.0	50	52
78	273	306	9.4	3.3	K513_0390 EZ701U	740	1800	38.53	2697/70	3400	3400	5000	9.9	10	5.0	2.0	50	50
78	442	530	15	2.0	K513_0390 EZ702U	1000	1800	38.53	2697/70	3400	3400	5000	15	10	5.0	2.0	50	52
78	497	589	17	1.8	K513_0390 EZ505U	1000	1800	38.53	2697/70	3400	3400	5000	14	10	5.0	2.0	50	52
78	608	766	21	1.5	K513_0390 EZ703U	1000	1800	38.53	2697/70	3400	3400	5000	23	10	5.0	2.0	50	54
86	246	276	9.1	3.7	K513_0350 EZ701U	670	1780	34.80	174/5	3400	3400	5000	10	10	5.0	2.0	50	50
86	399	479	15	2.3	K513_0350 EZ702U	1000	1780	34.80	174/5	3400	3400	5000	15	10	5.0	2.0	50	52
86	449	532	17	2.0	K513_0350 EZ505U	1000	1780	34.80	174/5	3400	3400	5000	14	10	5.0	2.0	50	52
86	549	692	20	1.6	K513_0350 EZ703U	1000	1780	34.80	174/5	3400	3400	5000	23	10	5.0	2.0	50	54
93	229	256	8.9	3.9	K513_0320 EZ701U	620	1800	32.31	20677/640	3400	3400	5000	10	10	5.0	2.0	50	50
93	371	445	14	2.4	K513_0320 EZ702U	1000	1800	32.31	20677/640	3400	3400	5000	16	10	5.0	2.0	50	52
93	417	494	16	2.2	K513_0320 EZ505U	1000	1800	32.31	20677/640	3400	3400	5000	14	10	5.0	2.0	50	52
93	510	642	20	1.8	K513_0320 EZ703U	1000	1800	32.31	20677/640	3400	3400	5000	24	10	5.0	2.0	50	54
103	206	232	8.9	4.2	K513_0290 EZ701U	560	1660	29.18	4669/160	3400	3400	5000	11	10	5.0	2.0	50	50
103	335	402	14	2.6	K513_0290 EZ702U	1000	1660	29.18	4669/160	3400	3400	5000	16	10	5.0	2.0	50	52
103	377	446	16	2.3	K513_0290 EZ505U	1000	1660	29.18	4669/160	3400	3400	5000	14	10	5.0	2.0	50	52
103	460	580	20	1.9	K513_0290 EZ703U	1000	1660	29.18	4669/160	3400	3400	5000	24	10	5.0	2.0	50	54
123	172	193	9.0	4.8	K513_0240 EZ701U	470	1620	24.35	11687/480	2800	2800	4200	11	10	5.0	2.0	50	50
123	279	335	15	2.9	K513_0240 EZ702U	950	1620	24.35	11687/480	2800	2800	4200	17	10	5.0	2.0	50	52
123	314	372	16	2.6	K513_0240 EZ505U	1000	1620	24.35	11687/480	2800	2800	4200	15	10	5.0	2.0	50	52
123	384	484	20	2.1	K513_0240 EZ703U	1000	1620	24.35	11687/480	2800	2800	4200	25	10	5.0	2.0	50	54
123	496	703	26	1.7	K513_0240 EZ705U	1000	1800	24.35	11687/480	2800	2800	4200	37	10	5.0	2.0	50	60
136	252	303	15	3.1	K513_0220 EZ702U	860	1470	21.99	2639/120	2800	2800	4200	17	10	5.0	2.0	50	52
136	284	336	16	2.8	K513_0220 EZ505U	1000	1470	21.99	2639/120	2800	2800	4200	15	10	5.0	2.0	50	52
136	347	437	20	2.3	K513_0220 EZ703U	1000	1470	21.99	2639/120	2800	2800	4200	25	10	5.0	2.0	50	54
136	448	635	26	1.8	K513_0220 EZ705U	1000	1800	21.99	2639/120	2800	2800	4200	37	10	5.0	2.0	50	60
155	222	266	15	3.4	K513_0195 EZ702U	760	1390	19.35	27869/1440	2800	2800	4200	18	10	5.0	2.0	50	52
155	250	296	16	3.0	K513_0195 EZ505U	1000	1390	19.35	27869/1440	2800	2800	4200	16	10	5.0	2.0	50	52
155	305	385	20	2.5	K513_0195 EZ703U	1000	1390	19.35	27869/1440	2800	2800	4200	26	10	5.0	2.0	50	54
155	394	559	26	1.9	K513_0195 EZ705U	1000	1800	19.35	27869/1440	2800	2800	4200	38	10	5.0	2.0	50	60
155	413	686	27	1.8	K513_0195 EZ802U	1000	1800	19.35	27869/1440	2800	2800	4200	62	10	5.0	2.0	50	68
172	201	241	15	3.7	K513_0175 EZ702U	690	1250	17.48	6293/360	2800	2800	4200	18	10	5.0	2.0	50	52
172	226	267	17	3.3	K513_0175 EZ505U	1000	1250	17.48	6293/360	2800	2800	4200	16	10	5.0	2.0	50	52
172	276	348	20	2.7	K513_0175 EZ703U	1000	1250	17.48	6293/360	2800	2800	4200	26	10	5.0	2.0	50	54

n_{2N} [rpm]	M_{2N} [Nm]	$M_{2,0}$ [Nm]	a_{th}	S	Type	M_{2acc} [Nm]	M_{2NOT} [Nm]	i	i_{exakt}	n_{1maxDB} EL1,2 [rpm]	n_{1maxDB} EL3,4,5,6 [rpm]	n_{1maxZB} [rpm]	J_1 [kgcm²]	$\Delta\varphi_2$ [arcmin]	$\Delta\varphi_{2redII}$ [arcmin]	$\Delta\varphi_{2redI}$ [arcmin]	C_2 [Nm/arcmin]	m [kg]
K5 (n_{1N} = 3000 rpm, $M_{2acc,max}$ = 1000 Nm)																		
172	356	505	26	2.1	K513_0175 EZ705U	1000	1800	17.48	6293/360	2800	2800	4200	38	10	5.0	2.0	50	60
172	373	620	27	2.0	K513_0175 EZ802U	1000	1800	17.48	6293/360	2800	2800	4200	62	10	5.0	2.0	50	68
186	185	222	15	3.9	K513_0160 EZ702U	630	1150	16.09	26071/1620	2300	2300	3600	19	10	5.0	2.0	50	52
186	208	246	17	3.4	K513_0160 EZ505U	920	1150	16.09	26071/1620	2300	2300	3600	17	10	5.0	2.0	50	52
186	254	320	20	2.8	K513_0160 EZ703U	920	1150	16.09	26071/1620	2300	2300	3600	27	10	5.0	2.0	50	54
186	328	465	26	2.2	K513_0160 EZ705U	1000	1800	16.09	26071/1620	2300	2300	3600	39	10	5.0	2.0	50	60
186	343	571	27	2.1	K513_0160 EZ802U	1000	1800	16.09	26071/1620	2300	2300	3600	63	10	5.0	2.0	50	68
186	409	742	33	1.7	K513_0160 EZ803U	1000	1800	16.09	26071/1620	2300	2300	3600	89	10	5.0	2.0	50	74
206	167	200	15	4.1	K513_0145 EZ702U	570	1040	14.54	5887/405	2300	2300	3600	19	10	5.0	2.0	50	52
206	188	222	17	3.7	K513_0145 EZ505U	830	1040	14.54	5887/405	2300	2300	3600	18	10	5.0	2.0	50	52
206	229	289	20	3.0	K513_0145 EZ703U	830	1040	14.54	5887/405	2300	2300	3600	27	10	5.0	2.0	50	54
206	296	420	26	2.3	K513_0145 EZ705U	1000	1800	14.54	5887/405	2300	2300	3600	40	10	5.0	2.0	50	60
206	310	516	28	2.2	K513_0145 EZ802U	1000	1800	14.54	5887/405	2300	2300	3600	64	10	5.0	2.0	50	68
206	370	670	33	1.9	K513_0145 EZ803U	1000	1800	14.54	5887/405	2300	2300	3600	89	10	5.0	2.0	50	74
234	261	370	26	2.5	K513_0130 EZ705U	1000	1800	12.81	1537/120	2300	2300	3600	41	10	5.0	2.0	50	60
234	273	454	28	2.4	K513_0130 EZ802U	1000	1800	12.81	1537/120	2300	2300	3600	65	10	5.0	2.0	50	68
234	326	590	33	2.0	K513_0130 EZ803U	1000	1800	12.81	1537/120	2300	2300	3600	91	10	5.0	2.0	50	74
259	236	334	26	2.7	K513_0115 EZ705U	1000	1800	11.57	10759/930	2300	2300	3600	42	10	5.0	2.0	50	60
259	247	410	28	2.6	K513_0115 EZ802U	1000	1800	11.57	10759/930	2300	2300	3600	66	10	5.0	2.0	50	68
259	294	533	33	2.2	K513_0115 EZ803U	1000	1800	11.57	10759/930	2300	2300	3600	91	10	5.0	2.0	50	74
296	207	293	27	3.0	K513_0100 EZ705U	1000	1800	10.15	203/20	1900	1900	3200	44	10	5.0	2.0	50	60
296	216	360	28	2.8	K513_0100 EZ802U	970	1800	10.15	203/20	1900	1900	3200	68	10	5.0	2.0	50	68
296	258	468	33	2.4	K513_0100 EZ803U	1000	1800	10.15	203/20	1900	1900	3200	94	10	5.0	2.0	50	74
327	187	265	27	3.2	K513_0092 EZ705U	910	1750	9.168	1421/155	1900	1900	3200	45	10	5.0	2.0	50	60
327	195	325	28	3.0	K513_0092 EZ802U	880	1750	9.168	1421/155	1900	1900	3200	69	10	5.0	2.0	50	68
327	233	422	33	2.5	K513_0092 EZ803U	1000	1750	9.168	1421/155	1900	1900	3200	95	10	5.0	2.0	50	74
369	166	235	27	3.4	K513_0081 EZ705U	810	1560	8.134	17081/2100	1900	1900	3200	48	10	5.0	2.0	50	60
369	173	288	28	3.3	K513_0081 EZ802U	780	1560	8.134	17081/2100	1900	1900	3200	72	10	5.0	2.0	50	68
369	207	375	33	2.8	K513_0081 EZ803U	1000	1560	8.134	17081/2100	1900	1900	3200	98	10	5.0	2.0	50	74
408	150	212	27	3.7	K513_0073 EZ705U	730	1400	7.347	551/75	1900	1900	3200	50	10	5.0	2.0	50	60
408	157	261	28	3.5	K513_0073 EZ802U	700	1400	7.347	551/75	1900	1900	3200	74	10	5.0	2.0	50	68
408	187	339	34	3.0	K513_0073 EZ803U	1000	1400	7.347	551/75	1900	1900	3200	99	10	5.0	2.0	50	74
K5 (n_{1N} = 4500 rpm, $M_{2acc,max}$ = 1000 Nm)																		
93	437	704	13	2.1	K513_0480 EZ505U	1000	1800	48.16	2697/56	3400	3400	5000	13	10	5.0	2.0	50	52
103	395	636	13	2.2	K513_0440 EZ505U	1000	1800	43.50	87/2	3400	3400	5000	13	10	5.0	2.0	50	52
117	350	564	13	2.4	K513_0390 EZ505U	1000	1800	38.53	2697/70	3400	3400	5000	14	10	5.0	2.0	50	52
117	446	737	17	1.9	K513_0390 EZ703U	1000	1800	38.53	2697/70	3400	3400	5000	23	10	5.0	2.0	50	54
129	316	509	13	2.6	K513_0350 EZ505U	1000	1780	34.80	174/5	3400	3400	5000	14	10	5.0	2.0	50	52
129	403	665	17	2.0	K513_0350 EZ703U	1000	1780	34.80	174/5	3400	3400	5000	23	10	5.0	2.0	50	54
139	293	473	13	2.7	K513_0320 EZ505U	1000	1800	32.31	20677/640	3400	3400	5000	14	10	5.0	2.0	50	52
139	374	618	17	2.1	K513_0320 EZ703U	1000	1800	32.31	20677/640	3400	3400	5000	24	10	5.0	2.0	50	54
154	265	427	13	2.9	K513_0290 EZ505U	1000	1660	29.18	4669/160	3400	3400	5000	14	10	5.0	2.0	50	52
154	338	558	17	2.3	K513_0290 EZ703U	1000	1660	29.18	4669/160	3400	3400	5000	24	10	5.0	2.0	50	54
K6 (n_{1N} = 2000 rpm, $M_{2acc,max}$ = 1600 Nm)																		
105	794	1200	39	1.4	K613_0190 EZ805U	1600	2900	18.99	17019/896	2600	2600	4000	140	10	5.0	2.0	83	109
117	717	1084	39	1.5	K613_0170 EZ805U	1600	2900	17.16	549/32	2600	2600	4000	141	10	5.0	2.0	83	109
126	663	1003	39	1.6	K613_0160 EZ805U	1600	2900	15.87	54839/3456	2200	2200	3500	143	10	5.0	2.0	83	109
140	599	906	39	1.7	K613_0145 EZ805U	1600	2740	14.33	12383/864	2200	2200	3500	143	10	5.0	2.0	83	109
158	528	798	39	1.9	K613_0125 EZ805U	1600	2410	12.63	3233/256	2200	2200	3500	147	10	5.0	2.0	83	109
175	477	721	40	2.0	K613_0115 EZ805U	1590	2180	11.41	22631/1984	2200	2200	3500	148	10	5.0	2.0	83	109
247	339	512	40	2.5	K613_0081 EZ805U	1420	2900	8.107	85095/10496	1800	1800	3000	160	10	5.0	2.0	83	109
273	306	463	40	2.7	K613_0073 EZ805U	1370	2630	7.323	19215/2624	1800	1800	3000	162	10	5.0	2.0	83	109
K6 (n_{1N} = 3000 rpm, $M_{2acc,max}$ = 1600 Nm)																		
11	1076	1176	7.2	1.2	K614_2660 EZ501U	1580	2630	265.9	829661/3120	3100	3100	4500	3.1	10	6.0	3.0	83	72
12	997	1090	6.4	1.5	K614_2460 EZ501U	1600	2900	246.3	1261297/5120	3100	3100	4500	3.1	10	6.0	3.0	83	72
13	900	984	6.2	1.6	K614_2230 EZ501U	1600	2800	222.5	284809/1280	3100	3100	4500	3.1	10	6.0	3.0	83	72
16	747	816	5.9	1.9	K614_1850 EZ501U	1600	2290	184.6	383873/2080	3100	3100	4500	3.2	10	6.0	3.0	83	72
18	674	737	5.7	2.1	K614_1670 EZ501U	1600	2070	166.7	86681/520	3100	3100	4500	3.2	10	6.0	3.0	83	72
20	600	655	5.5	2.4	K614_1480 EZ501U	1600	2170	148.2	4551637/30720	3100	3100	4500	3.2	10	6.0	3.0	83	72
20	1032	1115	9.5	1.4	K614_1480 EZ502U	1600	2170	148.2	4551637/30720	3100	3100	4500	5.5	10	6.0	3.0	83	73
22	542	592	5.6	2.5	K614_1340 EZ501U	1570	1960	133.8	1027789/7680	3100	3100	4500	3.2	10	6.0	3.0	83	72
22	932	1007	9.7	1.5	K614_1340 EZ502U	1570	1960	133.8	1027789/7680	3100	3100	4500	5.5	10	6.0	3.0	83	73
24	498	545	5.2	2.9	K614_1230 EZ501U	1600	2000	123.2	1261297/10240	3100	3100	4500	3.3	10	6.0	3.0	83	72

n_{2N} [rpm]	M_{2N} [Nm]	$M_{2,0}$ [Nm]	a_{th}	S	Type	M_{2acc} [Nm]	M_{2NOT} [Nm]	i	i_{exakt}	n_{1maxDB} EL1,2 [rpm]	n_{1maxDB} EL3,4,5,6 [rpm]	n_{1maxZB} [rpm]	J_1 [kgcm²]	$\Delta\varphi_2$ [arcmin]	$\Delta\varphi_{2redII}$ [arcmin]	$\Delta\varphi_{2redI}$ [arcmin]	C_2 [Nm/arcmin]	m [kg]
K6 (n_{1N} = 3000 rpm, $M_{2acc,max}$ = 1600 Nm)																		
24	858	927	9.0	1.7	K614_1230 EZ502U	1600	2000	123.2	1261297/10240	3100	3100	4500	5.6	10	6.0	3.0	83	73
27	450	492	5.5	3.0	K614_1110 EZ501U	1450	1810	111.3	284809/2560	3100	3100	4500	3.3	10	6.0	3.0	83	72
27	775	838	9.5	1.7	K614_1110 EZ502U	1450	1810	111.3	284809/2560	3100	3100	4500	5.6	10	6.0	3.0	83	73
31	392	429	6.6	2.7	K613_0950 EZ501U	1290	1630	95.41	293105/3072	3100	3100	4500	3.5	10	5.0	2.0	83	68
31	675	730	11	1.6	K613_0950 EZ502U	1290	1630	95.41	293105/3072	3100	3100	4500	5.8	10	5.0	2.0	83	70
31	675	757	11	1.6	K613_0950 EZ701U	1290	1630	95.41	293105/3072	3100	3100	4500	9.1	10	5.0	2.0	83	71
35	354	387	7.1	2.7	K613_0860 EZ501U	1170	1470	86.18	66185/768	3100	3100	4500	3.5	10	5.0	2.0	83	68
35	610	659	12	1.6	K613_0860 EZ502U	1170	1470	86.18	66185/768	3100	3100	4500	5.8	10	5.0	2.0	83	70
35	610	684	12	1.6	K613_0860 EZ701U	1170	1470	86.18	66185/768	3100	3100	4500	9.1	10	5.0	2.0	83	71
39	313	342	5.5	3.8	K613_0760 EZ501U	1160	1500	76.14	126697/1664	3100	3100	4500	3.7	10	5.0	2.0	83	68
39	539	582	9.5	2.2	K613_0760 EZ502U	1200	1500	76.14	126697/1664	3100	3100	4500	6.0	10	5.0	2.0	83	70
39	539	604	7.9	2.7	K613_0760 EZ701U	1460	2900	76.14	126697/1664	3100	3100	4500	9.3	10	5.0	2.0	83	71
39	706	808	12	1.7	K613_0760 EZ503U	1200	1500	76.14	126697/1664	3100	3100	4500	8.4	10	5.0	2.0	83	71
39	873	1048	13	1.7	K613_0760 EZ702U	1600	2900	76.14	126697/1664	3100	3100	4500	15	10	5.0	2.0	83	74
39	983	1165	14	1.5	K613_0760 EZ505U	1600	2900	76.14	126697/1664	3100	3100	4500	13	10	5.0	2.0	83	74
44	283	309	5.9	3.8	K613_0690 EZ501U	1050	1360	68.77	28609/416	3100	3100	4500	3.8	10	5.0	2.0	83	68
44	487	526	10	2.2	K613_0690 EZ502U	1080	1360	68.77	28609/416	3100	3100	4500	6.1	10	5.0	2.0	83	70
44	487	546	8.4	2.7	K613_0690 EZ701U	1310	2630	68.77	28609/416	3100	3100	4500	9.4	10	5.0	2.0	83	71
44	638	730	13	1.7	K613_0690 EZ503U	1080	1360	68.77	28609/416	3100	3100	4500	8.4	10	5.0	2.0	83	71
44	789	947	14	1.7	K613_0690 EZ702U	1580	2630	68.77	28609/416	3100	3100	4500	15	10	5.0	2.0	83	74
44	888	1052	15	1.5	K613_0690 EZ505U	1580	2630	68.77	28609/416	3100	3100	4500	13	10	5.0	2.0	83	74
47	451	506	7.5	3.2	K613_0640 EZ701U	1220	2900	63.71	130479/2048	3100	3100	4500	9.6	10	5.0	2.0	83	71
47	731	877	12	2.0	K613_0640 EZ702U	1600	2900	63.71	130479/2048	3100	3100	4500	15	10	5.0	2.0	83	74
47	822	975	14	1.8	K613_0640 EZ505U	1600	2900	63.71	130479/2048	3100	3100	4500	13	10	5.0	2.0	83	74
52	407	457	7.3	3.6	K613_0580 EZ701U	1100	2800	57.55	29463/512	3100	3100	4500	9.7	10	5.0	2.0	83	71
52	660	792	12	2.2	K613_0580 EZ702U	1600	2800	57.55	29463/512	3100	3100	4500	15	10	5.0	2.0	83	74
52	743	880	13	1.9	K613_0580 EZ505U	1600	2800	57.55	29463/512	3100	3100	4500	13	10	5.0	2.0	83	74
52	908	1144	16	1.6	K613_0580 EZ703U	1600	2800	57.55	29463/512	3100	3100	4500	23	10	5.0	2.0	83	76
63	338	379	7.3	4.0	K613_0480 EZ701U	910	2290	47.73	39711/832	3100	3100	4500	10	10	5.0	2.0	83	71
63	548	657	12	2.5	K613_0480 EZ702U	1600	2290	47.73	39711/832	3100	3100	4500	16	10	5.0	2.0	83	74
63	616	730	13	2.2	K613_0480 EZ505U	1600	2290	47.73	39711/832	3100	3100	4500	14	10	5.0	2.0	83	74
63	753	949	16	1.8	K613_0480 EZ703U	1600	2290	47.73	39711/832	3100	3100	4500	23	10	5.0	2.0	83	76
70	305	342	7.3	4.3	K613_0430 EZ701U	820	2070	43.11	8967/208	3100	3100	4500	10	10	5.0	2.0	83	71
70	495	593	12	2.7	K613_0430 EZ702U	1600	2070	43.11	8967/208	3100	3100	4500	16	10	5.0	2.0	83	74
70	556	659	13	2.4	K613_0430 EZ505U	1600	2070	43.11	8967/208	3100	3100	4500	14	10	5.0	2.0	83	74
70	680	857	16	1.9	K613_0430 EZ703U	1600	2070	43.11	8967/208	3100	3100	4500	24	10	5.0	2.0	83	76
78	271	304	7.4	4.7	K613_0380 EZ701U	730	2170	38.32	156953/4096	3100	3100	4500	11	10	5.0	2.0	83	71
78	440	528	12	2.9	K613_0380 EZ702U	1500	2170	38.32	156953/4096	3100	3100	4500	16	10	5.0	2.0	83	74
78	495	586	13	2.6	K613_0380 EZ505U	1600	2170	38.32	156953/4096	3100	3100	4500	15	10	5.0	2.0	83	74
78	604	762	16	2.1	K613_0380 EZ703U	1600	2170	38.32	156953/4096	3100	3100	4500	24	10	5.0	2.0	83	76
78	780	1106	21	1.6	K613_0380 EZ705U	1600	2900	38.32	156953/4096	3100	3100	4500	37	10	5.0	2.0	83	81
87	245	275	7.4	5.0	K613_0350 EZ701U	660	1960	34.61	35441/1024	3100	3100	4500	11	10	5.0	2.0	83	71
87	397	476	12	3.1	K613_0350 EZ702U	1360	1960	34.61	35441/1024	3100	3100	4500	16	10	5.0	2.0	83	74
87	447	529	13	2.7	K613_0350 EZ505U	1570	1960	34.61	35441/1024	3100	3100	4500	15	10	5.0	2.0	83	74
87	546	688	16	2.2	K613_0350 EZ703U	1570	1960	34.61	35441/1024	3100	3100	4500	24	10	5.0	2.0	83	76
87	705	999	21	1.7	K613_0350 EZ705U	1600	2900	34.61	35441/1024	3100	3100	4500	37	10	5.0	2.0	83	81
87	738	1228	22	1.7	K613_0350 EZ802U	1600	2900	34.61	35441/1024	3100	3100	4500	61	10	5.0	2.0	83	90
94	365	439	12	3.2	K613_0320 EZ702U	1250	2000	31.86	130479/4096	3100	3100	4500	17	10	5.0	2.0	83	74
94	411	487	14	2.9	K613_0320 EZ505U	1600	2000	31.86	130479/4096	3100	3100	4500	16	10	5.0	2.0	83	74
94	502	633	17	2.4	K613_0320 EZ703U	1600	2000	31.86	130479/4096	3100	3100	4500	25	10	5.0	2.0	83	76
94	649	920	21	1.8	K613_0320 EZ705U	1600	2900	31.86	130479/4096	3100	3100	4500	38	10	5.0	2.0	83	81
94	679	1130	22	1.7	K613_0320 EZ802U	1600	2900	31.86	130479/4096	3100	3100	4500	62	10	5.0	2.0	83	90
104	330	396	12	3.5	K613_0290 EZ702U	1130	1810	28.77	29463/1024	3100	3100	4500	17	10	5.0	2.0	83	74
104	371	440	14	3.1	K613_0290 EZ505U	1450	1810	28.77	29463/1024	3100	3100	4500	16	10	5.0	2.0	83	74
104	454	572	17	2.5	K613_0290 EZ703U	1450	1810	28.77	29463/1024	3100	3100	4500	25	10	5.0	2.0	83	76
104	586	831	21	2.0	K613_0290 EZ705U	1600	2900	28.77	29463/1024	3100	3100	4500	38	10	5.0	2.0	83	81
104	613	1020	22	1.9	K613_0290 EZ802U	1600	2900	28.77	29463/1024	3100	3100	4500	62	10	5.0	2.0	83	90
125	489	693	22	2.2	K613_0240 EZ705U	1600	2900	24.01	24583/1024	2600	2600	4000	40	10	5.0	2.0	83	81
125	512	851	23	2.1	K613_0240 EZ802U	1600	2900	24.01	24583/1024	2600	2600	4000	64	10	5.0	2.0	83	90
125	610	1106	27	1.8	K613_0240 EZ803U	1600	2900	24.01	24583/1024	2600	2600	4000	89	10	5.0	2.0	83	96
138	442	626	22	2.4	K613_0220 EZ705U	1600	2900	21.68	5551/256	2600	2600	4000	40	10	5.0	2.0	83	81
138	462	769	23	2.3	K613_0220 EZ802U	1600	2900	21.68	5551/256	2600	2600	4000	64	10	5.0	2.0	83	90
138	551	999	27	1.9	K613_0220 EZ803U	1600	2900	21.68	5551/256	2600	2600	4000	89	10	5.0	2.0	83	96
158	218	261	12	4.6	K613_0190 EZ702U	740	1360	18.99	17019/896	2600	2600	4000	21	10	5.0	2.0	83	74

n_{2N} [rpm]	M_{2N} [Nm]	$M_{2,0}$ [Nm]	a_{th}	S	Type	M_{2acc} [Nm]	M_{2NOT} [Nm]	i	i_{exakt}	n_{1maxDB} EL1,2 [rpm]	n_{1maxDB} EL3,4,5,6 [rpm]	n_{1maxZB} [rpm]	J_1 [kgcm²]	$\Delta\varphi_2$ [arcmin]	$\Delta\varphi_{2redII}$ [arcmin]	$\Delta\varphi_{2redI}$ [arcmin]	C_2 [Nm/arcmin]	m [kg]
K6 (n_{1N} = 3000 rpm, $M_{2acc,max}$ = 1600 Nm)																		
158	245	291	14	4.1	K613_0190 EZ505U	1090	1360	18.99	17019/896	2600	2600	4000	20	10	5.0	2.0	83	74
158	300	378	17	3.3	K613_0190 EZ703U	1090	1360	18.99	17019/896	2600	2600	4000	29	10	5.0	2.0	83	76
158	387	548	22	2.6	K613_0190 EZ705U	1600	2900	18.99	17019/896	2600	2600	4000	42	10	5.0	2.0	83	81
158	405	674	23	2.5	K613_0190 EZ802U	1600	2900	18.99	17019/896	2600	2600	4000	66	10	5.0	2.0	83	90
158	483	875	27	2.1	K613_0190 EZ803U	1600	2900	18.99	17019/896	2600	2600	4000	91	10	5.0	2.0	83	96
175	197	236	12	4.9	K613_0170 EZ702U	670	1230	17.16	549/32	2600	2600	4000	22	10	5.0	2.0	83	74
175	221	262	14	4.4	K613_0170 EZ505U	980	1230	17.16	549/32	2600	2600	4000	20	10	5.0	2.0	83	74
175	271	341	17	3.6	K613_0170 EZ703U	980	1230	17.16	549/32	2600	2600	4000	30	10	5.0	2.0	83	76
175	349	495	22	2.8	K613_0170 EZ705U	1600	2900	17.16	549/32	2600	2600	4000	42	10	5.0	2.0	83	81
175	366	608	23	2.6	K613_0170 EZ802U	1600	2900	17.16	549/32	2600	2600	4000	66	10	5.0	2.0	83	90
175	436	791	27	2.2	K613_0170 EZ803U	1600	2900	17.16	549/32	2600	2600	4000	92	10	5.0	2.0	83	96
189	323	458	22	2.9	K613_0160 EZ705U	1580	2900	15.87	54839/3456	2200	2200	3500	44	10	5.0	2.0	83	81
189	338	563	23	2.8	K613_0160 EZ802U	1520	2900	15.87	54839/3456	2200	2200	3500	68	10	5.0	2.0	83	90
189	404	731	27	2.3	K613_0160 EZ803U	1600	2900	15.87	54839/3456	2200	2200	3500	94	10	5.0	2.0	83	96
209	292	414	22	3.1	K613_0145 EZ705U	1420	2740	14.33	12383/864	2200	2200	3500	45	10	5.0	2.0	83	81
209	306	508	23	3.0	K613_0145 EZ802U	1370	2740	14.33	12383/864	2200	2200	3500	69	10	5.0	2.0	83	90
209	364	660	27	2.5	K613_0145 EZ803U	1600	2740	14.33	12383/864	2200	2200	3500	94	10	5.0	2.0	83	96
238	257	365	22	3.4	K613_0125 EZ705U	1260	2410	12.63	3233/256	2200	2200	3500	48	10	5.0	2.0	83	81
238	269	448	23	3.2	K613_0125 EZ802U	1210	2410	12.63	3233/256	2200	2200	3500	72	10	5.0	2.0	83	90
238	321	582	27	2.7	K613_0125 EZ803U	1600	2410	12.63	3233/256	2200	2200	3500	98	10	5.0	2.0	83	96
263	232	329	22	3.6	K613_0115 EZ705U	1130	2180	11.41	22631/1984	2200	2200	3500	49	10	5.0	2.0	83	81
263	243	405	23	3.5	K613_0115 EZ802U	1090	2180	11.41	22631/1984	2200	2200	3500	73	10	5.0	2.0	83	90
263	290	526	28	2.9	K613_0115 EZ803U	1580	2180	11.41	22631/1984	2200	2200	3500	98	10	5.0	2.0	83	96
370	165	234	22	4.6	K613_0081 EZ705U	810	1550	8.107	85095/10496	1800	1800	3000	61	10	5.0	2.0	83	81
370	173	288	23	4.4	K613_0081 EZ802U	780	1550	8.107	85095/10496	1800	1800	3000	85	10	5.0	2.0	83	90
370	206	374	28	3.7	K613_0081 EZ803U	1120	2900	8.107	85095/10496	1800	1800	3000	110	10	5.0	2.0	83	96
410	149	211	22	4.9	K613_0073 EZ705U	730	1400	7.323	19215/2624	1800	1800	3000	63	10	5.0	2.0	83	81
410	156	260	23	4.7	K613_0073 EZ802U	700	1400	7.323	19215/2624	1800	1800	3000	87	10	5.0	2.0	83	90
410	186	337	28	3.9	K613_0073 EZ803U	1020	2630	7.323	19215/2624	1800	1800	3000	113	10	5.0	2.0	83	96
K6 (n_{1N} = 4500 rpm, $M_{2acc,max}$ = 1600 Nm)																		
59	692	1114	11	2.0	K613_0760 EZ505U	1600	2900	76.14	126697/1664	3100	3100	4500	13	10	5.0	2.0	83	74
65	625	1006	11	2.1	K613_0690 EZ505U	1580	2630	68.77	28609/416	3100	3100	4500	13	10	5.0	2.0	83	74
71	579	932	11	2.3	K613_0640 EZ505U	1600	2900	63.71	130479/2048	3100	3100	4500	13	10	5.0	2.0	83	74
71	737	1218	14	1.8	K613_0640 EZ703U	1600	2900	63.71	130479/2048	3100	3100	4500	23	10	5.0	2.0	83	76
78	523	842	11	2.4	K613_0580 EZ505U	1600	2800	57.55	29463/512	3100	3100	4500	13	10	5.0	2.0	83	74
78	666	1100	14	1.9	K613_0580 EZ703U	1600	2800	57.55	29463/512	3100	3100	4500	23	10	5.0	2.0	83	76
94	433	698	11	2.7	K613_0480 EZ505U	1600	2290	47.73	39711/832	3100	3100	4500	14	10	5.0	2.0	83	74
94	552	913	14	2.2	K613_0480 EZ703U	1600	2290	47.73	39711/832	3100	3100	4500	23	10	5.0	2.0	83	76
104	392	631	11	2.9	K613_0430 EZ505U	1600	2070	43.11	8967/208	3100	3100	4500	14	10	5.0	2.0	83	74
104	499	824	14	2.3	K613_0430 EZ703U	1600	2070	43.11	8967/208	3100	3100	4500	24	10	5.0	2.0	83	76
117	348	560	11	3.2	K613_0380 EZ505U	1600	2170	38.32	156953/4096	3100	3100	4500	15	10	5.0	2.0	83	74
117	443	733	14	2.5	K613_0380 EZ703U	1600	2170	38.32	156953/4096	3100	3100	4500	24	10	5.0	2.0	83	76
117	601	1099	19	1.8	K613_0380 EZ705U	1600	2900	38.32	156953/4096	3100	3100	4500	37	10	5.0	2.0	83	81
130	314	506	11	3.4	K613_0350 EZ505U	1570	1960	34.61	35441/1024	3100	3100	4500	15	10	5.0	2.0	83	74
130	347	1142	12	3.1	K613_0350 EZ802U	1600	2900	34.61	35441/1024	3100	3100	4500	61	10	5.0	2.0	83	90
130	400	662	14	2.7	K613_0350 EZ703U	1570	1960	34.61	35441/1024	3100	3100	4500	24	10	5.0	2.0	83	76
130	543	993	19	2.0	K613_0350 EZ705U	1600	2900	34.61	35441/1024	3100	3100	4500	37	10	5.0	2.0	83	81
141	289	466	11	3.6	K613_0320 EZ505U	1600	2000	31.86	130479/4096	3100	3100	4500	16	10	5.0	2.0	83	74
141	320	1051	12	3.2	K613_0320 EZ802U	1600	2900	31.86	130479/4096	3100	3100	4500	62	10	5.0	2.0	83	90
141	368	609	14	2.8	K613_0320 EZ703U	1600	2000	31.86	130479/4096	3100	3100	4500	25	10	5.0	2.0	83	76
141	499	914	19	2.1	K613_0320 EZ705U	1600	2900	31.86	130479/4096	3100	3100	4500	38	10	5.0	2.0	83	81
156	261	421	11	3.8	K613_0290 EZ505U	1450	1810	28.77	29463/1024	3100	3100	4500	16	10	5.0	2.0	83	74
156	289	949	12	3.5	K613_0290 EZ802U	1600	2900	28.77	29463/1024	3100	3100	4500	62	10	5.0	2.0	83	90
156	333	550	14	3.0	K613_0290 EZ703U	1450	1810	28.77	29463/1024	3100	3100	4500	25	10	5.0	2.0	83	76
156	451	825	19	2.2	K613_0290 EZ705U	1600	2900	28.77	29463/1024	3100	3100	4500	38	10	5.0	2.0	83	81
K7 (n_{1N} = 2000 rpm, $M_{2acc,max}$ = 2600 Nm)																		
68	1223	1851	26	1.8	K713_0290 EZ805U	2600	4800	29.29	7497/256	2900	2900	4200	141	10	5.0	2.0	126	137
79	1052	1591	26	2.0	K713_0250 EZ805U	2600	4800	25.18	64449/2560	2400	2400	3600	144	10	5.0	2.0	126	137
88	950	1437	26	2.1	K713_0230 EZ805U	2600	4800	22.74	14553/640	2400	2400	3600	145	10	5.0	2.0	126	137
99	845	1279	26	2.3	K713_0200 EZ805U	2600	4800	20.23	119133/5888	2400	2400	3600	149	10	5.0	2.0	126	137
109	763	1155	26	2.4	K713_0185 EZ805U	2600	4800	18.28	26901/1472	2400	2400	3600	149	10	5.0	2.0	126	137
122	685	1036	26	2.6	K713_0165 EZ805U	2600	4800	16.39	6293/384	2000	2000	3200	154	10	5.0	2.0	126	137
135	618	935	26	2.8	K713_0150 EZ805U	2600	4800	14.80	1421/96	2000	2000	3200	155	10	5.0	2.0	126	137
153	545	824	26	3.0	K713_0130 EZ805U	2560	4680	13.04	3339/256	2000	2000	3200	162	10	5.0	2.0	126	137

n_{2N} [rpm]	M_{2N} [Nm]	$M_{2,0}$ [Nm]	a_{th}	S	Type	M_{2acc} [Nm]	M_{2NOT} [Nm]	i	i_{exakt}	n_{1maxDB} EL1,2 [rpm]	n_{1maxDB} EL3,4,5,6 [rpm]	n_{1maxZB} [rpm]	J_1 [kgcm²]	$\Delta\varphi_2$ [arcmin]	$\Delta\varphi_{2redII}$ [arcmin]	$\Delta\varphi_{2redI}$ [arcmin]	C_2 [Nm/ arcmin]	m [kg]
K7 (n_{1N} = 2000 rpm, $M_{2acc,max}$ = 2600 Nm)																		
170	492	744	26	3.2	K713_0120 EZ805U	2310	4220	11.78	23373/1984	2000	2000	3200	163	10	5.0	2.0	126	137
197	425	643	26	3.6	K713_0100 EZ805U	1990	3640	10.17	651/64	1700	1700	2700	174	10	5.0	2.0	126	137
218	384	581	27	3.8	K713_0092 EZ805U	1800	3290	9.188	147/16	1700	1700	2700	177	10	5.0	2.0	126	137
239	350	529	27	4.1	K713_0084 EZ805U	1640	3000	8.373	87885/10496	1700	1700	2700	188	10	5.0	2.0	126	137
264	316	478	27	4.4	K713_0076 EZ805U	1480	2710	7.563	19845/2624	1700	1700	2700	192	10	5.0	2.0	126	137
K7 (n_{1N} = 3000 rpm, $M_{2acc,max}$ = 2600 Nm)																		
7.9	1542	1685	6.2	1.2	K714_3810 EZ501U	2220	3330	381.0	195083/512	2900	2900	4200	3.1	10	6.0	3.0	126	105
8.7	1393	1522	6.7	1.2	K714_3440 EZ501U	2010	3010	344.1	44051/128	2900	2900	4200	3.1	10	6.0	3.0	126	105
9.8	1233	1348	5.3	1.7	K714_3050 EZ501U	2520	3150	304.8	195083/640	2900	2900	4200	3.2	10	6.0	3.0	126	105
11	1114	1218	5.7	1.7	K714_2750 EZ501U	2280	2850	275.3	44051/160	2900	2900	4200	3.2	10	6.0	3.0	126	105
12	1769	1984	7.3	1.4	K714_2540 EZ701U	2600	4800	254.0	520149/2048	2900	2900	4200	9.1	10	6.0	3.0	126	108
12	1015	1109	5.1	2.0	K714_2510 EZ501U	2260	2830	250.7	320943/1280	2900	2900	4200	3.2	10	6.0	3.0	126	105
13	1597	1792	7.1	1.5	K714_2290 EZ701U	2600	4800	229.4	117453/512	2900	2900	4200	9.1	10	6.0	3.0	126	108
13	916	1002	5.5	2.0	K714_2260 EZ501U	2040	2550	226.5	72471/320	2900	2900	4200	3.2	10	6.0	3.0	126	105
15	1360	1526	6.8	1.8	K714_1950 EZ701U	2600	4800	195.4	2600745/13312	2900	2900	4200	9.2	10	6.0	3.0	126	108
16	780	853	5.0	2.4	K714_1930 EZ501U	1940	2420	192.9	320943/1664	2900	2900	4200	3.3	10	6.0	3.0	126	105
16	1343	1452	8.7	1.4	K714_1930 EZ502U	1940	2420	192.9	320943/1664	2900	2900	4200	5.6	10	6.0	3.0	126	106
17	1229	1378	6.6	2.0	K714_1760 EZ701U	2600	4800	176.5	587265/3328	2900	2900	4200	9.2	10	6.0	3.0	126	108
17	705	770	5.4	2.4	K714_1740 EZ501U	1750	2190	174.2	72471/416	2900	2900	4200	3.3	10	6.0	3.0	126	105
17	1213	1311	9.3	1.4	K714_1740 EZ502U	1750	2190	174.2	72471/416	2900	2900	4200	5.6	10	6.0	3.0	126	106
20	1070	1200	6.3	2.2	K714_1540 EZ701U	2600	4800	153.7	39339/256	2900	2900	4200	9.3	10	6.0	3.0	126	108
20	614	671	5.0	2.9	K714_1520 EZ501U	1800	2250	151.7	24273/160	2900	2900	4200	3.5	10	6.0	3.0	126	105
20	1056	1142	8.5	1.7	K714_1520 EZ502U	1800	2250	151.7	24273/160	2900	2900	4200	5.8	10	6.0	3.0	126	106
22	966	1084	6.1	2.5	K714_1390 EZ701U	2600	4560	138.8	8883/64	2900	2900	4200	9.3	10	6.0	3.0	126	108
22	1567	1881	9.9	1.5	K714_1390 EZ702U	2600	4560	138.8	8883/64	2900	2900	4200	15	10	6.0	3.0	126	111
22	554	606	5.3	2.9	K714_1370 EZ501U	1630	2030	137.0	5481/40	2900	2900	4200	3.5	10	6.0	3.0	126	105
22	954	1032	9.2	1.7	K714_1370 EZ502U	1630	2030	137.0	5481/40	2900	2900	4200	5.8	10	6.0	3.0	126	106
24	884	992	6.0	2.7	K714_1270 EZ701U	2390	4520	127.0	520149/4096	2900	2900	4200	9.5	10	6.0	3.0	126	108
24	1434	1721	9.7	1.7	K714_1270 EZ702U	2600	4520	127.0	520149/4096	2900	2900	4200	15	10	6.0	3.0	126	111
26	799	896	5.8	3.0	K714_1150 EZ701U	2160	4090	114.7	117453/1024	2900	2900	4200	9.5	10	6.0	3.0	126	108
26	1295	1554	9.4	1.9	K714_1150 EZ702U	2600	4090	114.7	117453/1024	2900	2900	4200	15	10	6.0	3.0	126	111
30	687	770	5.5	3.5	K714_0990 EZ701U	1860	3820	98.60	1009701/10240	2900	2900	4200	9.7	10	6.0	3.0	126	108
30	1113	1336	9.0	2.2	K714_0990 EZ702U	2600	3820	98.60	1009701/10240	2900	2900	4200	15	10	6.0	3.0	126	111
30	1531	1930	12	1.6	K714_0990 EZ703U	2600	3820	98.60	1009701/10240	2900	2900	4200	23	10	6.0	3.0	126	113
30	697	782	7.3	2.7	K713_0990 EZ701U	1880	3330	98.54	100905/1024	2900	2900	4200	9.7	10	5.0	2.0	126	100
30	1130	1357	12	1.6	K713_0990 EZ702U	2220	3330	98.54	100905/1024	2900	2900	4200	15	10	5.0	2.0	126	102
34	620	696	5.6	3.7	K714_0890 EZ701U	1680	3450	89.06	227997/2560	2900	2900	4200	9.7	10	6.0	3.0	126	108
34	1006	1207	9.1	2.3	K714_0890 EZ702U	2600	3450	89.06	227997/2560	2900	2900	4200	15	10	6.0	3.0	126	111
34	1383	1743	13	1.6	K714_0890 EZ703U	2600	3450	89.06	227997/2560	2900	2900	4200	23	10	6.0	3.0	126	113
34	630	706	7.8	2.7	K713_0890 EZ701U	1700	3010	89.00	22785/256	2900	2900	4200	9.7	10	5.0	2.0	126	100
34	1021	1225	13	1.6	K713_0890 EZ702U	2010	3010	89.00	22785/256	2900	2900	4200	15	10	5.0	2.0	126	102
38	558	626	5.2	4.3	K713_0790 EZ701U	1510	3150	78.83	20181/256	2900	2900	4200	10	10	5.0	2.0	126	100
38	904	1085	8.5	2.7	K713_0790 EZ702U	2520	3150	78.83	20181/256	2900	2900	4200	15	10	5.0	2.0	126	102
38	1243	1568	12	1.9	K713_0790 EZ703U	2520	3150	78.83	20181/256	2900	2900	4200	23	10	5.0	2.0	126	104
42	504	565	5.6	4.3	K713_0710 EZ701U	1360	2850	71.20	4557/64	2900	2900	4200	10	10	5.0	2.0	126	100
42	817	980	9.1	2.7	K713_0710 EZ702U	2280	2850	71.20	4557/64	2900	2900	4200	16	10	5.0	2.0	126	102
42	1123	1416	13	1.9	K713_0710 EZ703U	2280	2850	71.20	4557/64	2900	2900	4200	23	10	5.0	2.0	126	104
46	459	515	5.2	4.9	K713_0650 EZ701U	1240	2830	64.85	33201/512	2900	2900	4200	11	10	5.0	2.0	126	100
46	744	893	8.5	3.0	K713_0650 EZ702U	2260	2830	64.85	33201/512	2900	2900	4200	16	10	5.0	2.0	126	102
46	1023	1289	12	2.2	K713_0650 EZ703U	2260	2830	64.85	33201/512	2900	2900	4200	24	10	5.0	2.0	126	104
46	1320	1872	14	1.8	K713_0650 EZ705U	2600	4800	64.85	33201/512	2900	2900	4200	36	10	5.0	2.0	126	110
51	414	465	5.6	4.9	K713_0590 EZ701U	1120	2550	58.57	7497/128	2900	2900	4200	11	10	5.0	2.0	126	100
51	672	806	9.1	3.0	K713_0590 EZ702U	2040	2550	58.57	7497/128	2900	2900	4200	16	10	5.0	2.0	126	102
51	924	1165	13	2.2	K713_0590 EZ703U	2040	2550	58.57	7497/128	2900	2900	4200	24	10	5.0	2.0	126	104
51	1193	1691	14	2.0	K713_0590 EZ705U	2600	4800	58.57	7497/128	2900	2900	4200	37	10	5.0	2.0	126	110
60	572	687	9.2	3.4	K713_0500 EZ702U	1940	2420	49.88	166005/3328	2900	2900	4200	18	10	5.0	2.0	126	102
60	787	992	13	2.5	K713_0500 EZ703U	1940	2420	49.88	166005/3328	2900	2900	4200	26	10	5.0	2.0	126	104
60	1016	1440	14	2.2	K713_0500 EZ705U	2600	4800	49.88	166005/3328	2900	2900	4200	38	10	5.0	2.0	126	110
60	1063	1769	15	2.1	K713_0500 EZ802U	2600	4800	49.88	166005/3328	2900	2900	4200	62	10	5.0	2.0	126	118
67	517	620	9.9	3.4	K713_0450 EZ702U	1750	2190	45.05	37485/832	2900	2900	4200	18	10	5.0	2.0	126	102
67	711	896	14	2.5	K713_0450 EZ703U	1750	2190	45.05	37485/832	2900	2900	4200	26	10	5.0	2.0	126	104
67	917	1301	14	2.4	K713_0450 EZ705U	2600	4800	45.05	37485/832	2900	2900	4200	38	10	5.0	2.0	126	110
67	960	1598	15	2.3	K713_0450 EZ802U	2600	4800	45.05	37485/832	2900	2900	4200	62	10	5.0	2.0	126	118
76	450	540	9.2	4.0	K713_0390 EZ702U	1540	2250	39.23	2511/64	2900	2900	4200	20	10	5.0	2.0	126	102

n_{2N} [rpm]	M_{2N} [Nm]	$M_{2,0}$ [Nm]	a_{th}	S	Type	M_{2acc} [Nm]	M_{2NOT} [Nm]	i	i_{exakt}	n_{1maxDB} EL1,2 [rpm]	n_{1maxDB} EL3,4,5,6 [rpm]	n_{1maxZB} [rpm]	J_1 [kgcm²]	$\Delta\varphi_2$ [arcmin]	$\Delta\varphi_{2redII}$ [arcmin]	$\Delta\varphi_{2redI}$ [arcmin]	C_2 [Nm/arcmin]	m [kg]
K7 (n_{1N} = 3000 rpm, $M_{2acc,max}$ = 2600 Nm)																		
76	619	780	13	2.9	K713_0390 EZ703U	1800	2250	39.23	2511/64	2900	2900	4200	27	10	5.0	2.0	126	104
76	799	1133	14	2.6	K713_0390 EZ705U	2600	4800	39.23	2511/64	2900	2900	4200	40	10	5.0	2.0	126	110
76	836	1392	15	2.5	K713_0390 EZ802U	2600	4800	39.23	2511/64	2900	2900	4200	64	10	5.0	2.0	126	118
76	998	1808	18	2.1	K713_0390 EZ803U	2600	4800	39.23	2511/64	2900	2900	4200	89	10	5.0	2.0	126	124
85	407	488	9.9	4.0	K713_0350 EZ702U	1390	2030	35.44	567/16	2900	2900	4200	20	10	5.0	2.0	126	102
85	559	705	14	2.9	K713_0350 EZ703U	1630	2030	35.44	567/16	2900	2900	4200	28	10	5.0	2.0	126	104
85	722	1023	14	2.8	K713_0350 EZ705U	2600	4560	35.44	567/16	2900	2900	4200	40	10	5.0	2.0	126	110
85	755	1257	15	2.7	K713_0350 EZ802U	2600	4560	35.44	567/16	2900	2900	4200	64	10	5.0	2.0	126	118
85	901	1633	18	2.2	K713_0350 EZ803U	2600	4560	35.44	567/16	2900	2900	4200	89	10	5.0	2.0	126	124
93	660	936	14	3.0	K713_0320 EZ705U	2600	4520	32.42	33201/1024	2900	2900	4200	42	10	5.0	2.0	126	110
93	691	1150	15	2.8	K713_0320 EZ802U	2600	4520	32.42	33201/1024	2900	2900	4200	66	10	5.0	2.0	126	118
93	825	1494	18	2.4	K713_0320 EZ803U	2600	4800	32.42	33201/1024	2900	2900	4200	91	10	5.0	2.0	126	124
102	596	845	14	3.2	K713_0290 EZ705U	2600	4090	29.29	7497/256	2900	2900	4200	42	10	5.0	2.0	126	110
102	624	1039	15	3.0	K713_0290 EZ802U	2600	4090	29.29	7497/256	2900	2900	4200	66	10	5.0	2.0	126	118
102	745	1349	18	2.5	K713_0290 EZ803U	2600	4800	29.29	7497/256	2900	2900	4200	92	10	5.0	2.0	126	124
119	513	727	14	3.5	K713_0250 EZ705U	2500	4180	25.18	64449/2560	2400	2400	3600	46	10	5.0	2.0	126	110
119	537	893	15	3.3	K713_0250 EZ802U	2410	4180	25.18	64449/2560	2400	2400	3600	70	10	5.0	2.0	126	118
119	640	1160	18	2.8	K713_0250 EZ803U	2600	4800	25.18	64449/2560	2400	2400	3600	95	10	5.0	2.0	126	124
132	463	657	14	3.8	K713_0230 EZ705U	2260	3770	22.74	14553/640	2400	2400	3600	46	10	5.0	2.0	126	110
132	485	806	15	3.6	K713_0230 EZ802U	2170	3770	22.74	14553/640	2400	2400	3600	70	10	5.0	2.0	126	118
132	578	1048	18	3.0	K713_0230 EZ803U	2600	4800	22.74	14553/640	2400	2400	3600	96	10	5.0	2.0	126	124
148	412	584	14	4.1	K713_0200 EZ705U	2010	3540	20.23	119133/5888	2400	2400	3600	50	10	5.0	2.0	126	110
148	431	718	15	3.9	K713_0200 EZ802U	1930	3540	20.23	119133/5888	2400	2400	3600	74	10	5.0	2.0	126	118
148	515	932	18	3.2	K713_0200 EZ803U	2600	4800	20.23	119133/5888	2400	2400	3600	100	10	5.0	2.0	126	124
164	372	528	14	4.3	K713_0185 EZ705U	1820	3200	18.28	26901/1472	2400	2400	3600	51	10	5.0	2.0	126	110
164	390	648	15	4.1	K713_0185 EZ802U	1750	3200	18.28	26901/1472	2400	2400	3600	75	10	5.0	2.0	126	118
164	465	842	18	3.5	K713_0185 EZ803U	2530	4800	18.28	26901/1472	2400	2400	3600	100	10	5.0	2.0	126	124
183	334	473	15	4.7	K713_0165 EZ705U	1630	3120	16.39	6293/384	2000	2000	3200	55	10	5.0	2.0	126	110
183	349	581	15	4.5	K713_0165 EZ802U	1570	3120	16.39	6293/384	2000	2000	3200	79	10	5.0	2.0	126	118
183	417	755	18	3.7	K713_0165 EZ803U	2270	4800	16.39	6293/384	2000	2000	3200	105	10	5.0	2.0	126	124
203	301	427	15	5.0	K713_0150 EZ705U	1470	2820	14.80	1421/96	2000	2000	3200	56	10	5.0	2.0	126	110
203	316	525	15	4.8	K713_0150 EZ802U	1420	2820	14.80	1421/96	2000	2000	3200	80	10	5.0	2.0	126	118
203	376	682	18	4.0	K713_0150 EZ803U	2050	4800	14.80	1421/96	2000	2000	3200	106	10	5.0	2.0	126	124
230	332	601	18	4.4	K713_0130 EZ803U	1810	4680	13.04	3339/256	2000	2000	3200	112	10	5.0	2.0	126	124
255	300	543	18	4.7	K713_0120 EZ803U	1630	4220	11.78	23373/1984	2000	2000	3200	114	10	5.0	2.0	126	124
K8 (n_{1N} = 2000 rpm, $M_{2acc,max}$ = 4650 Nm)																		
41	2047	3096	17	2.1	K813_0490 EZ805U	4650	6040	48.99	5487/112	2800	2800	4000	141	10	5.0	2.0	196	191
45	1849	2796	16	2.3	K813_0440 EZ805U	4370	5460	44.25	177/4	2800	2800	4000	142	10	5.0	2.0	196	191
50	1671	2528	16	2.5	K813_0400 EZ805U	4650	8400	40.01	12803/320	2800	2800	4000	145	10	5.0	2.0	196	191
55	1510	2284	16	2.7	K813_0360 EZ805U	4650	8400	36.14	2891/80	2800	2800	4000	146	10	5.0	2.0	196	191
62	1353	2047	16	2.9	K813_0320 EZ805U	4650	8400	32.39	31093/960	2800	2800	4000	150	10	5.0	2.0	196	191
68	1222	1849	16	3.1	K813_0290 EZ805U	4650	8400	29.25	7021/240	2800	2800	4000	151	10	5.0	2.0	196	191
78	1066	1612	16	3.4	K813_0260 EZ805U	4650	8400	25.51	140833/5520	2300	2300	3500	158	10	5.0	2.0	196	191
87	963	1456	16	3.6	K813_0230 EZ805U	4520	8260	23.04	31801/1380	2300	2300	3500	159	10	5.0	2.0	196	191
104	801	1212	16	4.1	K813_0190 EZ805U	3760	6870	19.18	133517/6960	2300	2300	3500	170	10	5.0	2.0	196	191
115	724	1095	16	4.3	K813_0175 EZ805U	3400	6210	17.33	30149/1740	2300	2300	3500	173	10	5.0	2.0	196	191
122	686	1038	16	4.5	K813_0165 EZ805U	3220	5890	16.43	42067/2560	1900	1900	3000	179	10	5.0	2.0	196	191
135	620	938	16	4.8	K813_0150 EZ805U	2910	5320	14.84	9499/640	1900	1900	3000	182	10	5.0	2.0	196	191
K8 (n_{1N} = 3000 rpm, $M_{2acc,max}$ = 4650 Nm)																		
9.6	2165	2428	5.2	1.8	K814_3110 EZ701U	4650	7760	310.9	2149075/6912	2800	2800	4000	9.2	10	6.0	3.0	196	166
11	1956	2193	5.5	1.8	K814_2810 EZ701U	4330	7010	280.8	485275/1728	2800	2800	4000	9.3	10	6.0	3.0	196	166
12	1784	2001	5.1	2.1	K814_2560 EZ701U	4650	7070	256.2	8854189/34560	2800	2800	4000	9.3	10	6.0	3.0	196	166
12	2893	3472	8.2	1.3	K814_2560 EZ702U	4650	7070	256.2	8854189/34560	2800	2800	4000	15	10	6.0	3.0	196	169
13	1611	1807	5.4	2.1	K814_2310 EZ701U	4360	6390	231.4	1999333/8640	2800	2800	4000	9.4	10	6.0	3.0	196	166
13	2613	3136	8.8	1.3	K814_2310 EZ702U	4650	6390	231.4	1999333/8640	2800	2800	4000	15	10	6.0	3.0	196	169
16	1336	1499	4.9	2.7	K814_1920 EZ701U	3610	6040	191.9	85963/448	2800	2800	4000	9.6	10	6.0	3.0	196	166
16	2167	2600	8.0	1.6	K814_1920 EZ702U	4650	6040	191.9	85963/448	2800	2800	4000	15	10	6.0	3.0	196	169
17	1207	1354	5.3	2.7	K814_1730 EZ701U	3260	5460	173.3	2773/16	2800	2800	4000	9.6	10	6.0	3.0	196	166
17	1957	2348	8.6	1.6	K814_1730 EZ702U	4370	5460	173.3	2773/16	2800	2800	4000	15	10	6.0	3.0	196	169
19	1091	1224	4.9	3.1	K814_1570 EZ701U	2950	5380	156.7	601741/3840	2800	2800	4000	9.8	10	6.0	3.0	196	166
19	1769	2123	7.9	1.9	K814_1570 EZ702U	4300	5380	156.7	601741/3840	2800	2800	4000	15	10	6.0	3.0	196	169
19	2433	3067	11	1.4	K814_1570 EZ703U	4300	5380	156.7	601741/3840	2800	2800	4000	23	10	6.0	3.0	196	171
21	986	1105	5.3	3.1	K814_1420 EZ701U	2660	4860	141.5	135877/960	2800	2800	4000	9.8	10	6.0	3.0	196	166
21	1598	1918	8.5	1.9	K814_1420 EZ702U	3890	4860	141.5	135877/960	2800	2800	4000	15	10	6.0	3.0	196	169

n_{2N} [rpm]	M_{2N} [Nm]	$M_{2,0}$ [Nm]	a_{th}	S	Type	M_{2acc} [Nm]	M_{2NOT} [Nm]	i	i_{exakt}	n_{1maxDB} EL1,2 [rpm]	n_{1maxDB} EL3,4,5,6 [rpm]	n_{1maxZB} [rpm]	J_1 [kgcm²]	$\Delta\varphi_2$ [arcmin]	$\Delta\varphi_{2redII}$ [arcmin]	$\Delta\varphi_{2redI}$ [arcmin]	C_2 [Nm/arcmin]	m [kg]
K8 (n_{1N} = 3000 rpm, $M_{2acc,max}$ = 4650 Nm)																		
21	2198	2770	12	1.4	K814_1420 EZ703U	3890	4860	141.5	135877/960	2800	2800	4000	23	10	6.0	3.0	196	171
24	883	991	4.8	3.7	K814_1270 EZ701U	2390	4920	126.9	1461371/11520	2800	2800	4000	10	10	6.0	3.0	196	166
24	1432	1719	7.7	2.3	K814_1270 EZ702U	3930	4920	126.9	1461371/11520	2800	2800	4000	15	10	6.0	3.0	196	169
24	1970	2483	11	1.6	K814_1270 EZ703U	3930	4920	126.9	1461371/11520	2800	2800	4000	23	10	6.0	3.0	196	171
26	798	895	5.1	3.7	K814_1150 EZ701U	2160	4440	114.6	329987/2880	2800	2800	4000	10	10	6.0	3.0	196	166
26	1294	1553	8.3	2.3	K814_1150 EZ702U	3550	4440	114.6	329987/2880	2800	2800	4000	15	10	6.0	3.0	196	169
26	1779	2243	11	1.6	K814_1150 EZ703U	3550	4440	114.6	329987/2880	2800	2800	4000	23	10	6.0	3.0	196	171
30	2065	3436	10	2.0	K814_0980 EZ802U	4650	8400	98.41	181071/1840	2800	2800	4000	61	10	6.0	3.0	196	184
31	687	771	5.0	4.2	K813_0970 EZ701U	1860	3650	97.17	31093/320	2800	2800	4000	11	10	5.0	2.0	196	153
31	1115	1338	8.1	2.6	K813_0970 EZ702U	2920	3650	97.17	31093/320	2800	2800	4000	16	10	5.0	2.0	196	156
31	1533	1932	11	1.9	K813_0970 EZ703U	2920	3650	97.17	31093/320	2800	2800	4000	24	10	5.0	2.0	196	158
34	1865	3103	10	2.3	K814_0890 EZ802U	4650	8260	88.89	40887/460	2800	2800	4000	61	10	6.0	3.0	196	184
34	621	696	5.3	4.2	K813_0880 EZ701U	1680	3300	87.76	7021/80	2800	2800	4000	11	10	5.0	2.0	196	153
34	1007	1208	8.7	2.6	K813_0880 EZ702U	2640	3300	87.76	7021/80	2800	2800	4000	16	10	5.0	2.0	196	156
34	1384	1745	12	1.9	K813_0880 EZ703U	2640	3300	87.76	7021/80	2800	2800	4000	24	10	5.0	2.0	196	158
38	562	630	5.2	4.7	K813_0790 EZ701U	1520	3290	79.38	45725/576	2800	2800	4000	12	10	5.0	2.0	196	153
38	911	1093	8.4	2.9	K813_0790 EZ702U	2630	3290	79.38	45725/576	2800	2800	4000	18	10	5.0	2.0	196	156
38	1252	1579	12	2.1	K813_0790 EZ703U	2630	3290	79.38	45725/576	2800	2800	4000	25	10	5.0	2.0	196	158
38	1616	2292	9.9	2.5	K813_0790 EZ705U	4650	7760	79.38	45725/576	2800	2800	4000	38	10	5.0	2.0	196	163
38	1692	2816	10	2.4	K813_0790 EZ802U	4650	7760	79.38	45725/576	2800	2800	4000	62	10	5.0	2.0	196	171
41	1553	2583	9.5	2.7	K814_0740 EZ802U	4650	6870	73.99	1201653/16240	2800	2800	4000	62	10	6.0	3.0	196	184
41	1852	3356	11	2.3	K814_0740 EZ803U	4650	6870	73.99	1201653/16240	2800	2800	4000	88	10	6.0	3.0	196	191
42	507	569	5.6	4.7	K813_0720 EZ701U	1370	2970	71.70	10325/144	2800	2800	4000	12	10	5.0	2.0	196	153
42	823	987	9.0	2.9	K813_0720 EZ702U	2380	2970	71.70	10325/144	2800	2800	4000	18	10	5.0	2.0	196	156
42	1131	1426	12	2.1	K813_0720 EZ703U	2380	2970	71.70	10325/144	2800	2800	4000	26	10	5.0	2.0	196	158
42	1460	2070	11	2.5	K813_0720 EZ705U	4330	7010	71.70	10325/144	2800	2800	4000	38	10	5.0	2.0	196	163
42	1529	2543	11	2.4	K813_0720 EZ802U	4330	7010	71.70	10325/144	2800	2800	4000	62	10	5.0	2.0	196	171
42	1823	3304	13	2.0	K813_0720 EZ803U	4330	7010	71.70	10325/144	2800	2800	4000	87	10	5.0	2.0	196	177
45	1402	2333	9.4	2.9	K814_0670 EZ802U	4650	6210	66.83	38763/580	2800	2800	4000	62	10	6.0	3.0	196	184
45	1673	3031	11	2.4	K814_0670 EZ803U	4650	6210	66.83	38763/580	2800	2800	4000	88	10	6.0	3.0	196	191
46	1332	1889	8.8	3.2	K813_0650 EZ705U	4650	7070	65.41	188387/2880	2800	2800	4000	39	10	5.0	2.0	196	163
46	1395	2320	9.3	3.0	K813_0650 EZ802U	4650	7070	65.41	188387/2880	2800	2800	4000	63	10	5.0	2.0	196	171
46	1663	3014	11	2.5	K813_0650 EZ803U	4650	7070	65.41	188387/2880	2800	2800	4000	89	10	5.0	2.0	196	177
51	1203	1706	8.7	3.4	K813_0590 EZ705U	4650	6390	59.08	42539/720	2800	2800	4000	40	10	5.0	2.0	196	163
51	1260	2095	9.1	3.3	K813_0590 EZ802U	4650	6390	59.08	42539/720	2800	2800	4000	64	10	5.0	2.0	196	171
51	1502	2722	11	2.8	K813_0590 EZ803U	4650	6390	59.08	42539/720	2800	2800	4000	89	10	5.0	2.0	196	177
61	562	674	8.9	3.8	K813_0490 EZ702U	1920	2690	48.99	5487/112	2800	2800	4000	22	10	5.0	2.0	196	156
61	773	974	12	2.8	K813_0490 EZ703U	2160	2690	48.99	5487/112	2800	2800	4000	30	10	5.0	2.0	196	158
61	998	1414	8.8	3.9	K813_0490 EZ705U	4650	6040	48.99	5487/112	2800	2800	4000	43	10	5.0	2.0	196	163
61	1044	1738	9.2	3.7	K813_0490 EZ802U	4650	6040	48.99	5487/112	2800	2800	4000	67	10	5.0	2.0	196	171
61	1246	2257	11	3.1	K813_0490 EZ803U	4650	6040	48.99	5487/112	2800	2800	4000	92	10	5.0	2.0	196	177
68	508	609	9.6	3.8	K813_0440 EZ702U	1730	2430	44.25	177/4	2800	2800	4000	23	10	5.0	2.0	196	156
68	698	880	13	2.8	K813_0440 EZ703U	1950	2430	44.25	177/4	2800	2800	4000	31	10	5.0	2.0	196	158
68	901	1278	8.8	4.2	K813_0440 EZ705U	4370	5460	44.25	177/4	2800	2800	4000	43	10	5.0	2.0	196	163
68	943	1569	9.2	4.0	K813_0440 EZ802U	4230	5460	44.25	177/4	2800	2800	4000	67	10	5.0	2.0	196	171
68	1125	2039	11	3.3	K813_0440 EZ803U	4370	5460	44.25	177/4	2800	2800	4000	93	10	5.0	2.0	196	177
75	815	1155	8.8	4.5	K813_0400 EZ705U	3980	5380	40.01	12803/320	2800	2800	4000	46	10	5.0	2.0	196	163
75	853	1419	9.2	4.3	K813_0400 EZ802U	3820	5380	40.01	12803/320	2800	2800	4000	70	10	5.0	2.0	196	171
75	1017	1844	11	3.6	K813_0400 EZ803U	4650	8400	40.01	12803/320	2800	2800	4000	96	10	5.0	2.0	196	177
83	736	1043	8.9	4.8	K813_0360 EZ705U	3590	4860	36.14	2891/80	2800	2800	4000	47	10	5.0	2.0	196	163
83	770	1282	9.3	4.6	K813_0360 EZ802U	3450	4860	36.14	2891/80	2800	2800	4000	71	10	5.0	2.0	196	171
83	919	1665	11	3.8	K813_0360 EZ803U	4650	8400	36.14	2891/80	2800	2800	4000	96	10	5.0	2.0	196	177
93	690	1149	9.3	4.9	K813_0320 EZ802U	3100	5190	32.39	31093/960	2800	2800	4000	75	10	5.0	2.0	196	171
93	824	1492	11	4.1	K813_0320 EZ803U	4490	8400	32.39	31093/960	2800	2800	4000	101	10	5.0	2.0	196	177
103	744	1348	11	4.4	K813_0290 EZ803U	4060	8400	29.25	7021/240	2800	2800	4000	102	10	5.0	2.0	196	177
118	649	1176	11	4.8	K813_0260 EZ803U	3540	8400	25.51	140833/5520	2300	2300	3500	108	10	5.0	2.0	196	177
K9 (n_{1N} = 2000 rpm, $M_{2acc,max}$ = 7700 Nm)																		
27	3133	4740	13	2.2	K913_0750 EZ805U	6820	8520	75.00	62403/832	2600	2600	3800	142	10	5.0	–	379	305
32	2635	3986	12	2.7	K913_0630 EZ805U	7700	14000	63.07	209901/3328	2600	2600	3800	146	10	5.0	–	379	305
41	2044	3092	11	3.4	K913_0490 EZ805U	7700	13790	48.94	100223/2048	2600	2600	3800	153	10	5.0	–	379	305
53	1589	2404	10	4.4	K913_0380 EZ805U	7460	12500	38.04	194773/5120	2600	2600	3800	163	10	5.0	–	379	305
K9 (n_{1N} = 3000 rpm, $M_{2acc,max}$ = 7700 Nm)																		
8.0	2602	2919	4.9	1.8	K914_3740 EZ701U	6450	9210	373.7	13775935/36864	2600	2600	3800	9.4	10	5.0	–	379	280
10	2046	2294	4.7	2.2	K914_2940 EZ701U	5530	8520	293.8	977647/3328	2600	2600	3800	9.6	10	5.0	–	379	280

n_{2N} [rpm]	M_{2N} [Nm]	$M_{2,0}$ [Nm]	a_{th}	S	Type	M_{2acc} [Nm]	M_{2NOT} [Nm]	i	i_{exakt}	n_{1maxDB} EL1,2 [rpm]	n_{1maxDB} EL3,4,5,6 [rpm]	n_{1maxZB} [rpm]	J_1 [kgcm²]	$\Delta\varphi_2$ [arcmin]	$\Delta\varphi_{2redII}$ [arcmin]	$\Delta\varphi_{2redI}$ [arcmin]	C_2 [Nm/arcmin]	m [kg]
K9 (n_{1N} = 3000 rpm, $M_{2acc,max}$ = 7700 Nm)																		
10	3317	3981	7.7	1.4	K914_2940 EZ702U	6820	8520	293.8	977647/3328	2600	2600	3800	15	10	5.0	–	379	283
12	1720	1929	4.7	2.5	K914_2470 EZ701U	4650	7160	247.0	3288449/13312	2600	2600	3800	9.9	10	5.0	–	379	280
12	2789	3347	7.6	1.6	K914_2470 EZ702U	5730	7160	247.0	3288449/13312	2600	2600	3800	15	10	5.0	–	379	283
16	1335	1497	4.6	3.1	K914_1920 EZ701U	3610	6340	191.7	4710481/24576	2600	2600	3800	10	10	5.0	–	379	280
16	2164	2597	7.4	1.9	K914_1920 EZ702U	5070	6340	191.7	4710481/24576	2600	2600	3800	16	10	5.0	–	379	283
16	2976	3752	10	1.4	K914_1920 EZ703U	5070	6340	191.7	4710481/24576	2600	2600	3800	23	10	5.0	–	379	285
20	1038	1164	4.5	3.8	K914_1490 EZ701U	2800	5750	149.0	9154331/61440	2600	2600	3800	11	10	5.0	–	379	280
20	1682	2019	7.3	2.3	K914_1490 EZ702U	4600	5750	149.0	9154331/61440	2600	2600	3800	16	10	5.0	–	379	283
20	2313	2916	10	1.7	K914_1490 EZ703U	4600	5750	149.0	9154331/61440	2600	2600	3800	24	10	5.0	–	379	285
20	3079	5123	8.2	2.1	K914_1470 EZ802U	7700	12500	146.7	5258871/35840	2600	2600	3800	62	10	5.0	–	379	299
24	876	982	4.4	4.3	K914_1260 EZ701U	2370	4870	125.8	2221925/17664	2600	2600	3800	12	10	5.0	–	379	280
24	1420	1704	7.2	2.6	K914_1260 EZ702U	3900	4870	125.8	2221925/17664	2600	2600	3800	17	10	5.0	–	379	283
24	1953	2462	9.9	1.9	K914_1260 EZ703U	3900	4870	125.8	2221925/17664	2600	2600	3800	25	10	5.0	–	379	285
24	2599	4325	8.1	2.4	K914_1240 EZ802U	7700	11510	123.9	1276425/10304	2600	2600	3800	62	10	5.0	–	379	299
24	3101	5619	9.7	2.0	K914_1240 EZ803U	7700	11510	123.9	1276425/10304	2600	2600	3800	88	10	5.0	–	379	305
31	2034	3384	8.7	2.6	K913_0950 EZ802U	6450	9210	95.41	293105/3072	2600	2600	3800	64	10	5.0	–	379	286
31	2426	4397	10	2.2	K913_0950 EZ803U	6450	9210	95.41	293105/3072	2600	2600	3800	90	10	5.0	–	379	292
32	1059	1271	8.6	2.7	K914_0940 EZ702U	2910	3630	93.78	4177219/44544	2600	2600	3800	18	10	5.0	–	379	283
32	1456	1835	12	2.0	K914_0940 EZ703U	2910	3630	93.78	4177219/44544	2600	2600	3800	26	10	5.0	–	379	285
32	1938	3224	8.1	2.9	K914_0920 EZ802U	6860	8580	92.35	2399679/25984	2600	2600	3800	64	10	5.0	–	379	299
32	2312	4189	9.6	2.4	K914_0920 EZ803U	6860	8580	92.35	2399679/25984	2600	2600	3800	89	10	5.0	–	379	305
40	1599	2660	6.4	4.3	K913_0750 EZ802U	6820	8520	75.00	62403/832	2600	2600	3800	68	10	5.0	–	379	286
40	1907	3456	7.6	3.6	K913_0750 EZ803U	6820	8520	75.00	62403/832	2600	2600	3800	93	10	5.0	–	379	292
48	1345	2237	7.2	4.3	K913_0630 EZ802U	5730	7160	63.07	209901/3328	2600	2600	3800	71	10	5.0	–	379	286
48	1604	2906	7.1	4.4	K913_0630 EZ803U	7700	14000	63.07	209901/3328	2600	2600	3800	97	10	5.0	–	379	292
61	1043	1736	7.6	4.9	K913_0490 EZ802U	4680	6340	48.94	100223/2048	2600	2600	3800	78	10	5.0	–	379	286
K10 (n_{1N} = 3000 rpm, $M_{2acc,max}$ = 13200 Nm)																		
10	6093	10136	8.1	1.4	K1014_2900 EZ802U	13200	19560	290.4	392553/1352	2500	2500	3500	61	10	5.0	–	725	508
13	4982	8289	7.9	1.7	K1014_2370 EZ802U	12750	15940	237.4	49383/208	2500	2500	3500	62	10	5.0	–	725	508
20	3124	5198	7.6	2.4	K1014_1490 EZ802U	10620	13280	148.9	30969/208	2500	2500	3500	64	10	5.0	–	725	508
20	3727	6753	9.0	2.0	K1014_1490 EZ803U	10620	13280	148.9	30969/208	2500	2500	3500	90	10	5.0	–	725	514

16.3 Dimensional drawings

In this chapter you can find the dimensions of the geared motors.

There is a dimensional drawing for every possible shaft/housing design, each with the tables for gear unit dimensions, motor dimensions and geared motor dimensions.

Dimensions can exceed the specifications of ISO 2768-mK due to casting tolerances or accumulation of individual tolerances.

We reserve the right to make dimensional changes due to ongoing technical development.

You can download 3D models of our standard drives at http://configurator.stoeber.de.

Combination options and the dimensions of forced ventilated geared motors can also be found at http://configurator.stoeber.de.

Tolerances

Axis height in accordance with DIN 747	Tolerance
Up to 50 mm	-0.4 mm
Up to 250 mm	-0.5 mm
Up to 630 mm	-0.6 mm

Solid shaft	Tolerance
Shaft ∅ fit ≤ 50 mm	DIN 748-1, ISO k6
Shaft ∅ fit > 50 mm	DIN 748-1, ISO m6
Feather keys	DIN 6885-1, high form A

Hollow shaft	Tolerance
Hollow shaft hole fit	ISO H7
Feather keys	DIN 6885-1, high form K1 ∅30: DIN 6885-3, low form

Flange	Pilot tolerance
Up to 300 mm	ISO j6
Starting at 350 mm	ISO h6

Centering holes in solid shafts in accordance with DIN 332-2, DR shape

Thread size	M4	M5	M6	M8	M10	M12	M16	M20	M24
Thread depth [mm]	10	12.5	16	19	22	28	36	42	50

16.3.1 A shaft design (hollow shaft), G housing design (pitch circle diameter)

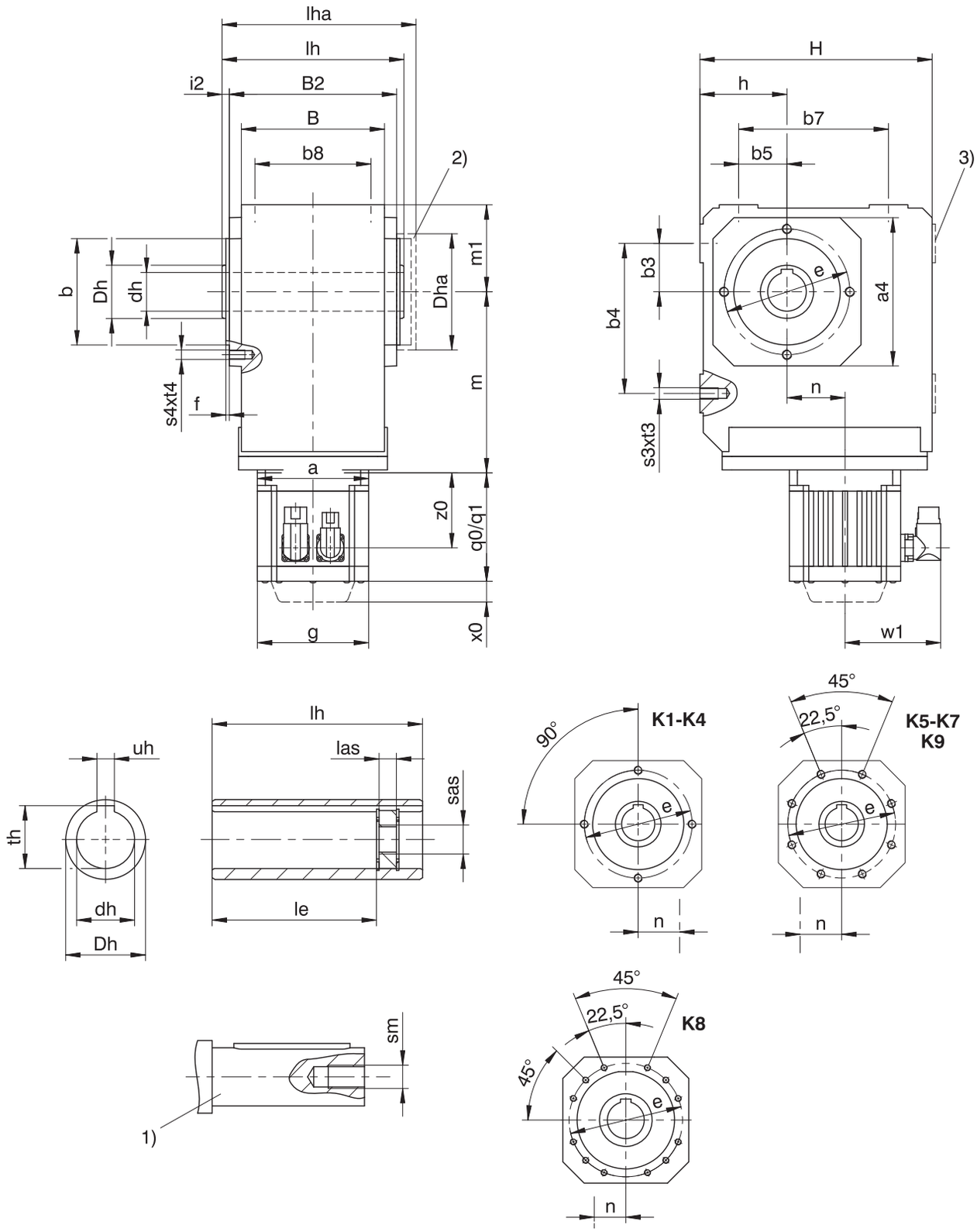

q0	Applies to motors without brake.	q1	Applies to motors with brake.
x0	Applies to encoders using an optical measuring method.	w1	Different for the One Cable Solution (OCS), see the chapter [▸ 17.4]
1)	The length of the machine shaft must be at least 2.2 x ∅dh and the length of the feather key must be at least 2 x ∅dh.	2)	Cover (optional)
3)	Only for K1 (other sizes on request)		

Dimensions of gear units

Type	□a4	Øb	b3	b4	b5	b7	b8	B	B2	Ødh	ØDh	Dha	Øe	f	h	H	i2	le	lh	las	lha	m1	s3	s4	sm	sas	t3	t4	th	uh
K1	105	75_{j6}	30	90	30	90	70	90	106	20^{H7}	40	□105	90	3.0	60	160	7.0	98.0	120	12	127.0	60	M8	M8	M6	M8	13	13	22.8	6^{JS9}
K1	105	75_{j6}	30	90	30	90	70	90	106	25^{H7}	40	□105	90	3.0	60	160	7.0	98.0	120	12	127.0	60	M8	M8	M10	M12	13	13	28.3	8^{JS9}
K1	105	75_{j6}	30	90	30	90	70	90	106	30^{H7}	40	□105	90	3.0	60	160	7.0	93.5	120	12	127.0	60	M8	M8	M10	M12	13	13	32.0	8^{JS9}
K2	116	82_{j6}	35	115	35	115	90	115	134	30^{H7}	45	□116	100	3.0	65	190	7.0	121.5	148	12	156.0	65	M10	M8	M10	M12	16	13	33.3	8^{JS9}
K3	132	95_{j6}	40	130	40	130	105	130	146	35^{H7}	50	□132	115	3.0	75	213	7.0	125.0	160	12	168.0	75	M10	M8	M12	M16	16	13	38.3	10^{JS9}
K4	152	110_{j6}	50	155	50	155	120	148	173	40^{H7}	55	□152	130	3.5	90	240	7.5	157.0	188	12	197.5	90	M12	M10	M16	M20	19	16	43.3	12^{JS9}
K5	145	110_{j6}	40	140	100	140	125	160	185	50^{H7}	65	□145	130	3.5	160	260	7.5	164.0	200	12	209.5	100	M16	M10	M16	M20	26	16	53.8	14^{JS9}
K6	180	140_{j6}	50	160	110	160	130	168	200	50^{H7}	70	∅183	165	3.5	190	310	7.5	179.0	215	12	224.5	120	M16	M10	M16	M20	26	16	53.8	14^{JS9}
K7	195	155_{j6}	55	180	125	180	145	190	226	60^{H7}	85	∅205	185	3.5	212	342	8.0	214.0	242	12	252.0	125	M20	M12	M20	M24	33	19	64.4	18^{JS9}
K8	226	185_{j6}	75	240	165	240	185	235	282	70^{H7}	100	∅184	215	4.0	265	410	9.0	263.0	300	20	311.0	145	M24	M12	M20	M24	38	19	74.9	20^{JS9}
K9	280	230_{j6}	95	280	185	280	225	285	330	90^{H7}	120	∅230	265	5.0	315	495	10.0	302.0	350	26	361.0	180	M30	M16	M24	M30	48	26	95.4	25^{JS9}

Dimensions of motors

Type	□g	q0	q1	w1	x0	z0
EZ301U	72	114.0	154.0	55.5	21	78.5
EZ302U	72	136.0	176.0	55.5	21	100.5
EZ303U	72	158.0	198.0	55.5	21	122.5
EZ401U	98	118.5	167.0	91.0	22	76.5
EZ402U	98	143.5	192.0	91.0	22	101.5
EZ404U	98	193.5	242.0	91.0	22	151.5
EZ501U	115	112.0	166.5	100.0	22	77.5
EZ502U	115	137.0	191.5	100.0	22	102.5
EZ503U	115	162.0	216.5	100.0	22	127.5
EZ505U	115	212.0	266.5	100.0	22	177.5
EZ701U	145	125.0	184.0	115.0	22	87.0
EZ702U	145	150.0	209.0	115.0	22	112.0
EZ703U	145	175.0	234.0	115.0	22	137.0
EZ705U	145	230.0	289.0	134.0	22	188.0
EZ802U	190	232.5	309.5	156.5	22	178.5
EZ803U	190	273.5	350.5	156.5	22	219.5
EZ805U	190	355.5	432.5	156.5	22	301.5

Dimensions of geared motors

Type	EZ3			EZ4			EZ5			EZ7			EZ8		
	a	m	n	a	m	n	a	m	n	a	m	n	a	m	n
K102	□72	124	36.0	□98	124	36.0	□115	128	36.0	□145	130	36.0	–	–	–
K202	□72	143	46.0	□98	143	46.0	□115	147	46.0	□145	149	46.0	–	–	–
K203	∅140	180	46.0	∅140	180	46.0	–	–	–	–	–	–	–	–	–
K302	∅140	163	52.5	∅140	163	52.5	□115	167	52.5	□145	169	52.5	–	–	–
K303	∅140	200	52.5	∅140	200	52.5	∅160	210	16.0	–	–	–	–	–	–
K402	–	–	–	–	–	–	∅160	187	60.0	□145	189	60.0	□190	192	60.0
K403	∅140	220	60.0	∅140	220	60.0	∅160	230	23.0	–	–	–	–	–	–
K513	–	–	–	–	–	–	∅160	172	15.0	□145	174	15.0	□190	177	15.0
K514	–	–	–	–	–	–	∅160	215	15.0	–	–	–	–	–	–
K613	–	–	–	–	–	–	∅160	191	18.0	∅200	193	18.0	□190	196	18.0
K614	–	–	–	–	–	–	∅160	234	18.0	–	–	–	–	–	–
K713	–	–	–	–	–	–	–	–	–	∅200	221	20.0	□190	224	20.0
K714	–	–	–	–	–	–	∅160	263	20.0	∅200	283	20.0	–	–	–
K813	–	–	–	–	–	–	–	–	–	∅200	247	24.0	∅250	249	24.0
K814	–	–	–	–	–	–	–	–	–	∅200	308	24.0	∅250	320	5.0
K913	–	–	–	–	–	–	–	–	–	–	–	–	∅250	294	25.0
K914	–	–	–	–	–	–	–	–	–	∅200	353	25.0	∅250	365	25.0

16.3.2 A shaft design (hollow shaft), NG housing design (base + pitch circle diameter)

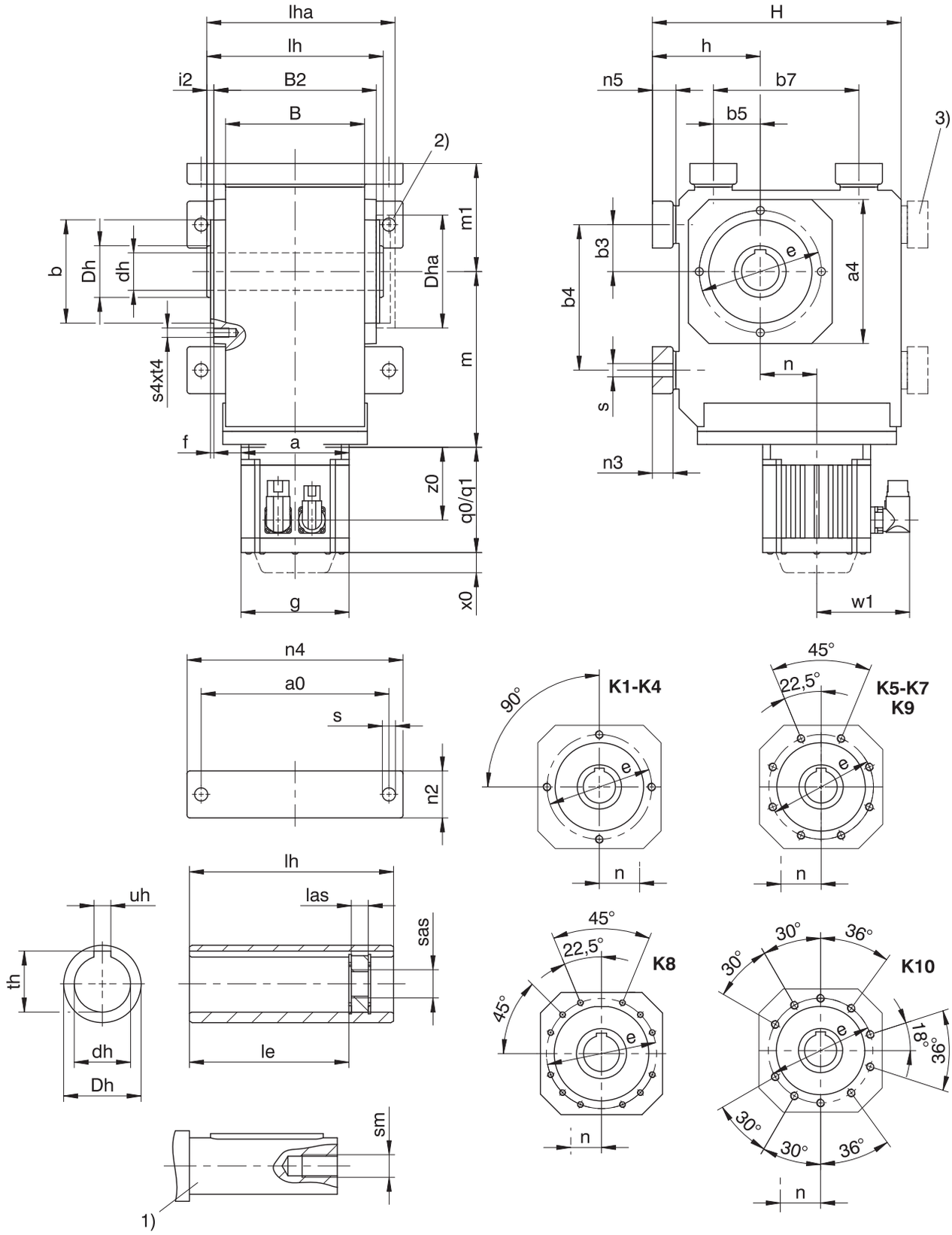

q0	Applies to motors without brake.	q1	Applies to motors with brake.
x0	Applies to encoders using an optical measuring method.	w1	Different for the One Cable Solution (OCS), see the chapter [▸ 17.4]
1)	The length of the machine shaft must be at least 2.2 x ∅dh and the length of the feather key must be at least 2 x ∅dh.	2)	Cover (optional)
3)	Only for K1 (other sizes on request)		

Dimensions of gear units

Type	a0	□a4	Øb	b3	b4	b5	b7	B	B2	Ødh	ØDh	Dha	Øe	f	h	H	i2	le	lh	las	lha	m1	n2	n3	n4	n5	Øs	s4	sm	sas	t4	th	uh
K1	115	105	75_{j6}	30	90	30	90	90	106	20^{H7}	40	□105	90	3.0	75	175	7.0	98.0	120	12	127.0	75	30	13	140	15	9.0	M8	M6	M8	13	22.8	6^{JS9}
K1	115	105	75_{j6}	30	90	30	90	90	106	25^{H7}	40	□105	90	3.0	75	175	7.0	98.0	120	12	127.0	75	30	13	140	15	9.0	M8	M10	M12	13	28.3	8^{JS9}
K1	115	105	75_{j6}	30	90	30	90	90	106	30^{H7}	40	□105	90	3.0	75	175	7.0	93.5	120	12	127.0	75	30	13	140	15	9.0	M8	M10	M12	13	32.0	8^{JS9}
K2	155	116	82_{j6}	35	115	35	115	115	134	30^{H7}	45	□116	100	3.0	88	213	7.0	121.5	148	12	156.0	88	40	20	185	23	11.0	M8	M10	M12	13	33.3	8^{JS9}
K3	170	132	95_{j6}	40	130	40	130	130	146	35^{H7}	50	□132	115	3.0	98	236	7.0	125.0	160	12	168.0	98	45	20	200	23	11.0	M8	M12	M16	13	38.3	10^{JS9}
K4	200	152	110_{j6}	50	155	50	155	148	173	40^{H7}	55	□152	130	3.5	115	265	7.5	157.0	188	12	197.5	115	50	22	230	25	14.0	M10	M16	M20	16	43.3	12^{JS9}
K5	200	145	110_{j6}	40	140	100	140	160	185	50^{H7}	65	□145	130	3.5	190	290	7.5	164.0	200	12	209.5	130	60	27	240	30	18.0	M10	M16	M20	16	53.8	14^{JS9}
K6	210	180	140_{j6}	50	160	110	160	168	200	50^{H7}	70	∅183	165	3.5	220	340	7.5	179.0	215	12	224.5	150	65	27	250	30	18.5	M10	M16	M20	16	53.8	14^{JS9}
K7	241	195	155_{j6}	55	180	125	180	190	226	60^{H7}	85	∅205	185	3.5	250	380	8.0	214.0	242	12	252.0	163	70	35	290	38	23.0	M12	M20	M24	19	64.4	18^{JS9}
K8	300	226	185_{j6}	75	240	165	240	235	282	70^{H7}	100	∅184	215	4.0	310	455	9.0	263.0	300	20	311.0	190	85	41	360	45	27.0	M12	M20	M24	19	74.9	20^{JS9}
K9	360	280	230_{j6}	95	280	185	280	285	330	90^{H7}	120	∅230	265	5.0	365	545	10.0	302.0	350	26	361.0	230	95	46	430	50	31.0	M16	M24	M30	26	95.4	25^{JS9}
K10	330	340	250_{h6}	115	350	265	420	400	356	100^{H7}	130	∅200	300	20.0	420	636	27.0	361.0	410	26	441.0	270	120	–	400	45	39.0	M20	M24	M30	33	106.4	28^{JS9}

Dimensions of motors

Type	□g	q0	q1	w1	x0	z0
EZ301U	72	114.0	154.0	55.5	21	78.5
EZ302U	72	136.0	176.0	55.5	21	100.5
EZ303U	72	158.0	198.0	55.5	21	122.5
EZ401U	98	118.5	167.0	91.0	22	76.5
EZ402U	98	143.5	192.0	91.0	22	101.5
EZ404U	98	193.5	242.0	91.0	22	151.5
EZ501U	115	112.0	166.5	100.0	22	77.5
EZ502U	115	137.0	191.5	100.0	22	102.5
EZ503U	115	162.0	216.5	100.0	22	127.5
EZ505U	115	212.0	266.5	100.0	22	177.5
EZ701U	145	125.0	184.0	115.0	22	87.0
EZ702U	145	150.0	209.0	115.0	22	112.0
EZ703U	145	175.0	234.0	115.0	22	137.0
EZ705U	145	230.0	289.0	134.0	22	188.0
EZ802U	190	232.5	309.5	156.5	22	178.5
EZ803U	190	273.5	350.5	156.5	22	219.5
EZ805U	190	355.5	432.5	156.5	22	301.5

Dimensions of geared motors

Type	EZ3			EZ4			EZ5			EZ7			EZ8		
	a	m	n	a	m	n	a	m	n	a	m	n	a	m	n
K102	□72	124	36.0	□98	124	36.0	□115	128	36.0	□145	130	36.0	–	–	–
K202	□72	143	46.0	□98	143	46.0	□115	147	46.0	□145	149	46.0	–	–	–
K203	∅140	180	46.0	∅140	180	46.0	–	–	–	–	–	–	–	–	–
K302	∅140	163	52.5	∅140	163	52.5	□115	167	52.5	□145	169	52.5	–	–	–
K303	∅140	200	52.5	∅140	200	52.5	∅160	210	16.0	–	–	–	–	–	–
K402	–	–	–	–	–	–	∅160	187	60.0	□145	189	60.0	□190	192	60.0
K403	∅140	220	60.0	∅140	220	60.0	∅160	230	23.0	–	–	–	–	–	–
K513	–	–	–	–	–	–	∅160	172	15.0	□145	174	15.0	□190	177	15.0
K514	–	–	–	–	–	–	∅160	215	15.0	–	–	–	–	–	–
K613	–	–	–	–	–	–	∅160	191	18.0	∅200	193	18.0	□190	196	18.0
K614	–	–	–	–	–	–	∅160	234	18.0	–	–	–	–	–	–
K713	–	–	–	–	–	–	–	–	–	∅200	221	20.0	□190	224	20.0
K714	–	–	–	–	–	–	∅160	263	20.0	∅200	283	20.0	–	–	–
K813	–	–	–	–	–	–	–	–	–	∅200	247	24.0	∅250	249	24.0
K814	–	–	–	–	–	–	–	–	–	∅200	308	24.0	∅250	320	5.0
K913	–	–	–	–	–	–	–	–	–	–	–	–	∅250	294	25.0
K914	–	–	–	–	–	–	–	–	–	∅200	353	25.0	∅250	365	25.0
K1014	–	–	–	–	–	–	–	–	–	–	–	–	∅250	450	28.0

16.3.3 A shaft design (hollow shaft), GD housing design (pitch circle diameter + torque arm bracket)

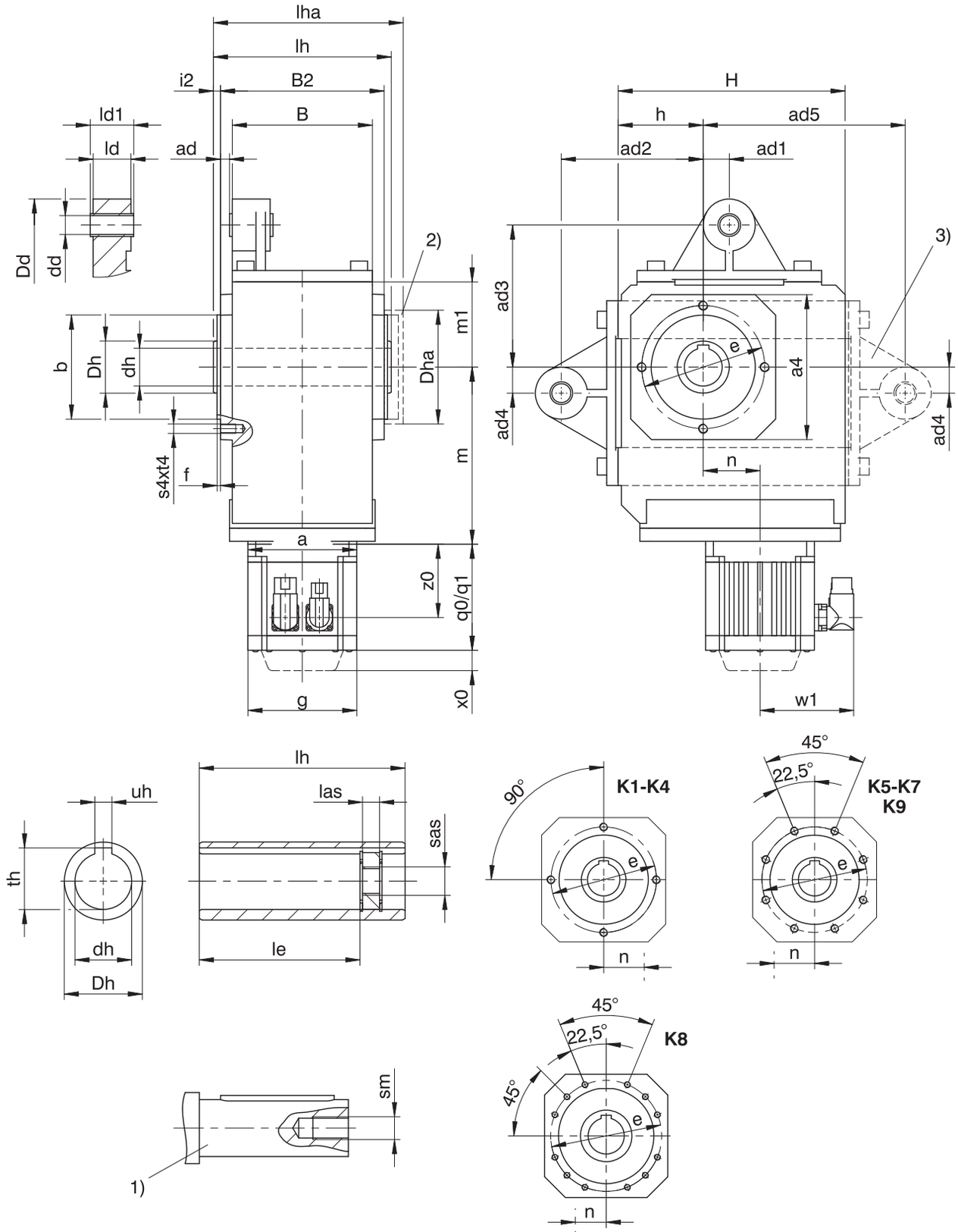

q0	Applies to motors without brake.	q1	Applies to motors with brake.
x0	Applies to encoders using an optical measuring method.	w1	Different for the One Cable Solution (OCS), see the chapter [▸ 17.4]
1)	The length of the machine shaft must be at least 2.2 x ∅dh and the length of the feather key must be at least 2 x ∅dh.	2)	Cover (optional)

3) Only for K1 (other sizes on request)

– If you brace the gear units without the torque arm brackets provided by the manufacturer for this purpose, the dimensions for ad2 and ad3 must meet the specified value.

Dimensions of gear units

Type	□a4	ad	ad1	ad2	ad3	ad4	ad5	Øb	B	B2	Ødd	Ødh	ØDd	ØDh	Dha	Øe	f
K1	105	6.0	15.0	90	90	15.0	130	75_{j6}	90	106	12^{H9}	20^{H7}	43	40	□105	90	3.0
K1	105	6.0	15.0	90	90	15.0	130	75_{j6}	90	106	12^{H9}	25^{H7}	43	40	□105	90	3.0
K1	105	6.0	15.0	90	90	15.0	130	75_{j6}	90	106	12^{H9}	30^{H7}	43	40	□105	90	3.0
K2	116	6.5	22.5	100	100	22.5	–	82_{j6}	115	134	16^{H9}	30^{H7}	45	45	□116	100	3.0
K3	132	5.0	25.0	120	120	25.0	–	95_{j6}	130	146	16^{H9}	35^{H7}	45	50	□132	115	3.0
K4	152	9.5	27.5	150	150	27.5	–	110_{j6}	148	173	20^{H9}	40^{H7}	55	55	□152	130	3.5
K5	145	9.5	30.0	250	190	30.0	–	110_{j6}	160	185	20^{H9}	50^{H7}	58	65	□145	130	3.5
K6	180	13.0	30.0	250	180	30.0	–	140_{j6}	168	200	20^{H9}	50^{H7}	58	70	∅183	165	3.5
K7	195	15.0	35.0	300	213	35.0	–	155_{j6}	190	226	20^{H9}	60^{H7}	68	85	∅205	185	3.5
K8	226	17.0	45.0	350	230	45.0	–	185_{j6}	235	282	24^{H9}	70^{H7}	72	100	∅184	215	4.0
K9	280	16.0	45.0	450	315	45.0	–	230_{j6}	285	330	24^{H9}	90^{H7}	75	120	∅230	265	5.0

Dimensions of gear units

Type	h	H	i2	ld	ld1	le	lh	las	lha	m1	s4	sm	sas	t4	th	uh
K1	60	160	7.0	24	28	98.0	120	12	127.0	60	M8	M6	M8	13	22.8	6^{JS9}
K1	60	160	7.0	24	28	98.0	120	12	127.0	60	M8	M10	M12	13	28.3	8^{JS9}
K1	60	160	7.0	24	28	93.5	120	12	127.0	60	M8	M10	M12	13	32.0	8^{JS9}
K2	65	190	7.0	32	38	121.5	148	12	156.0	65	M8	M10	M12	13	33.3	8^{JS9}
K3	75	213	7.0	32	38	125.0	160	12	168.0	75	M8	M12	M16	13	38.3	10^{JS9}
K4	90	240	7.5	40	46	157.0	188	12	197.5	90	M10	M16	M20	16	43.3	12^{JS9}
K5	160	260	7.5	40	46	164.0	200	12	209.5	100	M10	M16	M20	16	53.8	14^{JS9}
K6	190	310	7.5	40	46	179.0	215	12	224.5	120	M10	M16	M20	16	53.8	14^{JS9}
K7	212	342	8.0	64	70	214.0	242	12	252.0	125	M12	M20	M24	19	64.4	18^{JS9}
K8	265	410	9.0	102	115	263.0	300	20	311.0	145	M12	M20	M24	19	74.9	20^{JS9}
K9	315	495	10.0	102	115	302.0	350	26	361.0	180	M16	M24	M30	26	95.4	25^{JS9}

Dimensions of motors

Type	□g	q0	q1	w1	x0	z0
EZ301U	72	114.0	154.0	55.5	21	78.5
EZ302U	72	136.0	176.0	55.5	21	100.5
EZ303U	72	158.0	198.0	55.5	21	122.5
EZ401U	98	118.5	167.0	91.0	22	76.5
EZ402U	98	143.5	192.0	91.0	22	101.5
EZ404U	98	193.5	242.0	91.0	22	151.5
EZ501U	115	112.0	166.5	100.0	22	77.5
EZ502U	115	137.0	191.5	100.0	22	102.5
EZ503U	115	162.0	216.5	100.0	22	127.5
EZ505U	115	212.0	266.5	100.0	22	177.5
EZ701U	145	125.0	184.0	115.0	22	87.0
EZ702U	145	150.0	209.0	115.0	22	112.0
EZ703U	145	175.0	234.0	115.0	22	137.0
EZ705U	145	230.0	289.0	134.0	22	188.0
EZ802U	190	232.5	309.5	156.5	22	178.5
EZ803U	190	273.5	350.5	156.5	22	219.5
EZ805U	190	355.5	432.5	156.5	22	301.5

The dimensions a, m and n can be found on the next page.

Dimensions of geared motors

Type	EZ3			EZ4			EZ5			EZ7			EZ8		
	a	m	n	a	m	n	a	m	n	a	m	n	a	m	n
K102	□72	124	36.0	□98	124	36.0	□115	128	36.0	□145	130	36.0	–	–	–
K202	□72	143	46.0	□98	143	46.0	□115	147	46.0	□145	149	46.0	–	–	–
K203	∅140	180	46.0	∅140	180	46.0	–	–	–	–	–	–	–	–	–
K302	∅140	163	52.5	∅140	163	52.5	□115	167	52.5	□145	169	52.5	–	–	–
K303	∅140	200	52.5	∅140	200	52.5	∅160	210	16.0	–	–	–	–	–	–
K402	–	–	–	–	–	–	∅160	187	60.0	□145	189	60.0	□190	192	60.0
K403	∅140	220	60.0	∅140	220	60.0	∅160	230	23.0	–	–	–	–	–	–
K513	–	–	–	–	–	–	∅160	172	15.0	□145	174	15.0	□190	177	15.0
K514	–	–	–	–	–	–	∅160	215	15.0	–	–	–	–	–	–
K613	–	–	–	–	–	–	∅160	191	18.0	∅200	193	18.0	□190	196	18.0
K614	–	–	–	–	–	–	∅160	234	18.0	–	–	–	–	–	–
K713	–	–	–	–	–	–	–	–	–	∅200	221	20.0	□190	224	20.0
K714	–	–	–	–	–	–	∅160	263	20.0	∅200	283	20.0	–	–	–
K813	–	–	–	–	–	–	–	–	–	∅200	247	24.0	∅250	249	24.0
K814	–	–	–	–	–	–	–	–	–	∅200	308	24.0	∅250	320	5.0
K913	–	–	–	–	–	–	–	–	–	–	–	–	∅250	294	25.0
K914	–	–	–	–	–	–	–	–	–	∅200	353	25.0	∅250	365	25.0

16.3.4 A shaft design (hollow shaft), NGD housing design (foot + pitch circle diameter + torque arm bracket)

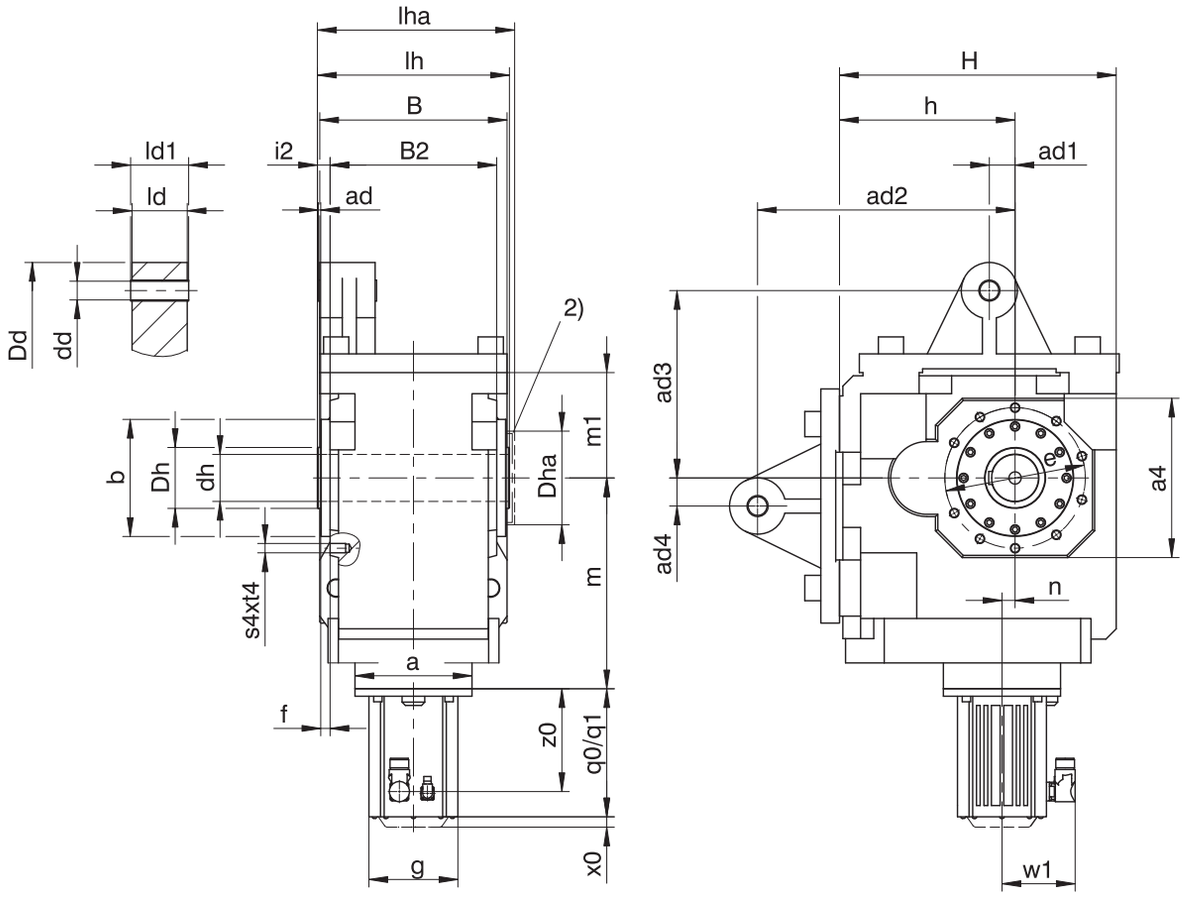

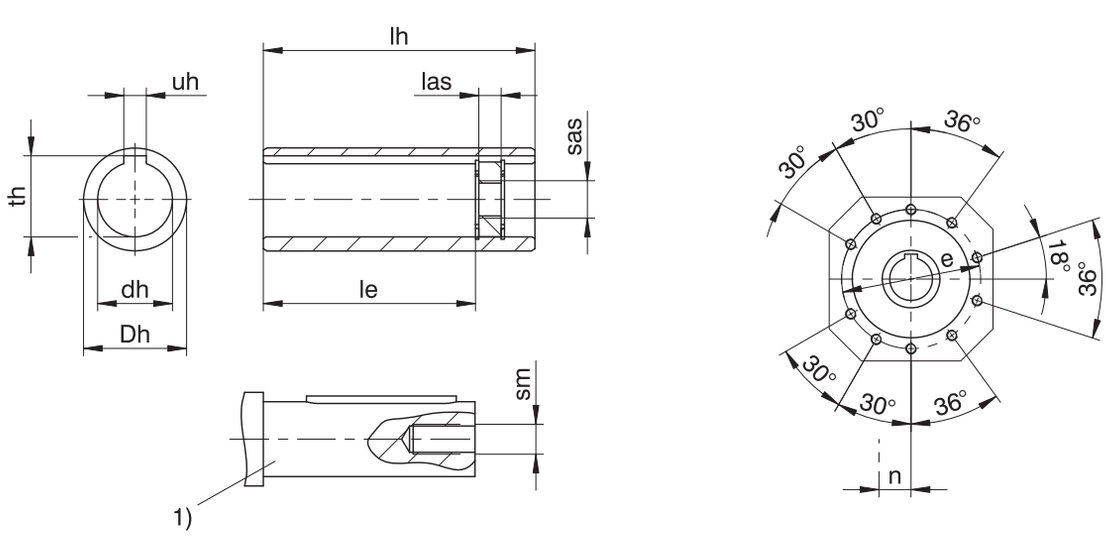

q0	Applies to motors without brake.	q1	Applies to motors with brake.
x0	Applies to encoders using an optical measuring method.	w1	Different for the One Cable Solution (OCS), see the chapter [▸ 17.4]
1)	The length of the machine shaft must be at least 2.2 x ∅dh and the length of the feather key must be at least 2 x ∅dh.	2)	Cover (optional)
–	If you brace the gear units without the torque arm brackets provided by the manufacturer for this purpose, the dimensions for ad2 and ad3 must meet the specified value.		

Dimensions of gear units

Type	□a4	ad	ad1	ad2	ad3	ad4	Øb	B	B2	Ødd	Ødh	ØDd	ØDh	Dha	Øe	f
K10	340	5	60	550	400	55	250_{h6}	400	356	40^{H9}	100^{H7}	120	130	∅200	300	20

Dimensions of gear units

Type	h	H	i2	ld	ld1	le	lh	las	lha	m1	s4	sm	sas	t4	th	uh
K10	375	591	27	118	124	361	410	26	441	225	M20	M24	M30	33	106.4	28^{JS9}

Dimensions of motors

Type	□g	q0	q1	w1	x0	z0
EZ802U	190	232.5	309.5	156.5	22	178.5
EZ803U	190	273.5	350.5	156.5	22	219.5

Dimensions of geared motors

Type	EZ8		
	a	m	n
K1014	∅250	450	28.0

16.3.5 A shaft design (hollow shaft), F housing design (round flange)

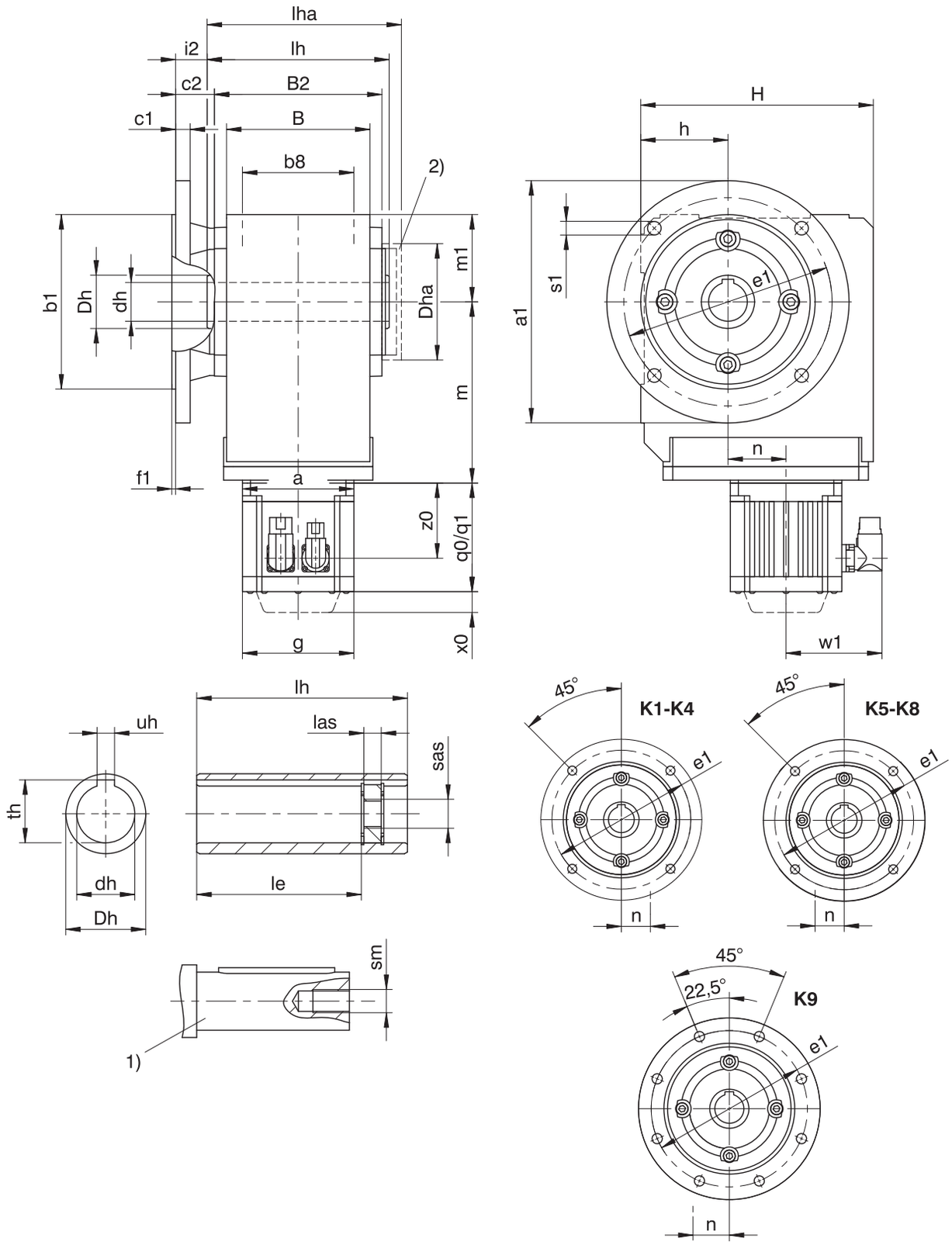

q0	Applies to motors without brake.	q1	Applies to motors with brake.
x0	Applies to encoders using an optical measuring method.	w1	Different for the One Cable Solution (OCS), see the chapter [▸ 17.4]
1)	The length of the machine shaft must be at least 2.2 x ∅dh and the length of the feather key must be at least 2 x ∅dh.	2)	Cover (optional)

Dimensions of gear units

Type	Øa1	Øb1	b8	B	B2	c1	c2	Ødh	ØDh	Dha	Øe1	f1	h	H	i2	le	lh	las	lha	m1	Øs1	sm	sas	th	uh
K1	160	110_{j6}	70	90	106	10	32.0	20^{H7}	40	□105	130	3.5	60	160	25.0	98.0	120	12	127.0	60	9	M6	M8	22.8	6^{JS9}
K1	160	110_{j6}	70	90	106	10	32.0	25^{H7}	40	□105	130	3.5	60	160	25.0	98.0	120	12	127.0	60	9	M10	M12	28.3	8^{JS9}
K1	160	110_{j6}	70	90	106	10	32.0	30^{H7}	40	□105	130	3.5	60	160	25.0	93.5	120	12	127.0	60	9	M10	M12	32.0	8^{JS9}
K2	200	130_{j6}	90	115	134	12	32.0	30^{H7}	45	□116	165	3.5	65	190	25.0	121.5	148	12	156.0	65	11	M10	M12	33.3	8^{JS9}
K3	200	130_{j6}	105	130	146	14	38.0	35^{H7}	50	□132	165	3.5	75	213	31.0	125.0	160	12	168.0	75	11	M12	M16	38.3	10^{JS9}
K4	250	180_{j6}	120	148	173	15	40.0	40^{H7}	55	□152	215	4.0	90	240	32.5	157.0	188	12	197.5	90	14	M16	M20	43.3	12^{JS9}
K5	250	180_{j6}	125	160	185	15	39.5	50^{H7}	65	□145	215	4.0	160	260	32.0	164.0	200	12	209.5	100	14	M16	M20	53.8	14^{JS9}
K6	300	230_{j6}	130	168	200	17	36.0	50^{H7}	70	∅183	265	4.0	190	310	28.5	179.0	215	12	224.5	120	14	M16	M20	53.8	14^{JS9}
K7	350	250_{h6}	145	190	226	18	44.0	60^{H7}	85	∅205	300	5.0	212	342	36.0	214.0	242	12	252.0	125	18	M20	M24	64.4	18^{JS9}
K8	400	300_{h6}	185	235	282	20	45.0	70^{H7}	100	∅184	350	5.0	265	410	36.0	263.0	300	20	311.0	145	18	M20	M24	74.9	20^{JS9}
K9	450	350_{h6}	225	285	330	23	50.0	90^{H7}	120	∅230	400	5.0	315	495	40.0	302.0	350	26	361.0	180	18	M24	M30	95.4	25^{JS9}

Dimensions of additional round flanges

Type	Øa1	Øb1	c1	Øe1	f1	Øs1
K1	140	95_{j6}	10	115	3.0	9
K2	160	110_{j6}	12	130	3.5	9
K3	160	110_{j6}	14	130	3.5	9
K3	250	180_{j6}	14	215	4.0	14
K8	350	250_{h6}	18	300	5.0	18
K8	450	350_{h6}	20	400	5.0	18

Dimensions of motors

Type	□g	q0	q1	w1	x0	z0
EZ301U	72	114.0	154.0	55.5	21	78.5
EZ302U	72	136.0	176.0	55.5	21	100.5
EZ303U	72	158.0	198.0	55.5	21	122.5
EZ401U	98	118.5	167.0	91.0	22	76.5
EZ402U	98	143.5	192.0	91.0	22	101.5
EZ404U	98	193.5	242.0	91.0	22	151.5
EZ501U	115	112.0	166.5	100.0	22	77.5
EZ502U	115	137.0	191.5	100.0	22	102.5
EZ503U	115	162.0	216.5	100.0	22	127.5
EZ505U	115	212.0	266.5	100.0	22	177.5
EZ701U	145	125.0	184.0	115.0	22	87.0
EZ702U	145	150.0	209.0	115.0	22	112.0
EZ703U	145	175.0	234.0	115.0	22	137.0
EZ705U	145	230.0	289.0	134.0	22	188.0
EZ802U	190	232.5	309.5	156.5	22	178.5
EZ803U	190	273.5	350.5	156.5	22	219.5
EZ805U	190	355.5	432.5	156.5	22	301.5

The dimensions a, m and n can be found on the next page.

Dimensions of geared motors

Type	EZ3			EZ4			EZ5			EZ7			EZ8		
	a	m	n	a	m	n	a	m	n	a	m	n	a	m	n
K102	□72	124	36.0	□98	124	36.0	□115	128	36.0	□145	130	36.0	–	–	–
K202	□72	143	46.0	□98	143	46.0	□115	147	46.0	□145	149	46.0	–	–	–
K203	∅140	180	46.0	∅140	180	46.0	–	–	–	–	–	–	–	–	–
K302	∅140	163	52.5	∅140	163	52.5	□115	167	52.5	□145	169	52.5	–	–	–
K303	∅140	200	52.5	∅140	200	52.5	∅160	210	16.0	–	–	–	–	–	–
K402	–	–	–	–	–	–	∅160	187	60.0	□145	189	60.0	□190	192	60.0
K403	∅140	220	60.0	∅140	220	60.0	∅160	230	23.0	–	–	–	–	–	–
K513	–	–	–	–	–	–	∅160	172	15.0	□145	174	15.0	□190	177	15.0
K514	–	–	–	–	–	–	∅160	215	15.0	–	–	–	–	–	–
K613	–	–	–	–	–	–	∅160	191	18.0	∅200	193	18.0	□190	196	18.0
K614	–	–	–	–	–	–	∅160	234	18.0	–	–	–	–	–	–
K713	–	–	–	–	–	–	–	–	–	∅200	221	20.0	□190	224	20.0
K714	–	–	–	–	–	–	∅160	263	20.0	∅200	283	20.0	–	–	–
K813	–	–	–	–	–	–	–	–	–	∅200	247	24.0	∅250	249	24.0
K814	–	–	–	–	–	–	–	–	–	∅200	308	24.0	∅250	320	5.0
K913	–	–	–	–	–	–	–	–	–	–	–	–	∅250	294	25.0
K914	–	–	–	–	–	–	–	–	–	∅200	353	25.0	∅250	365	25.0

16.3.6 A shaft design (hollow shaft), NF housing design (base + round flange)

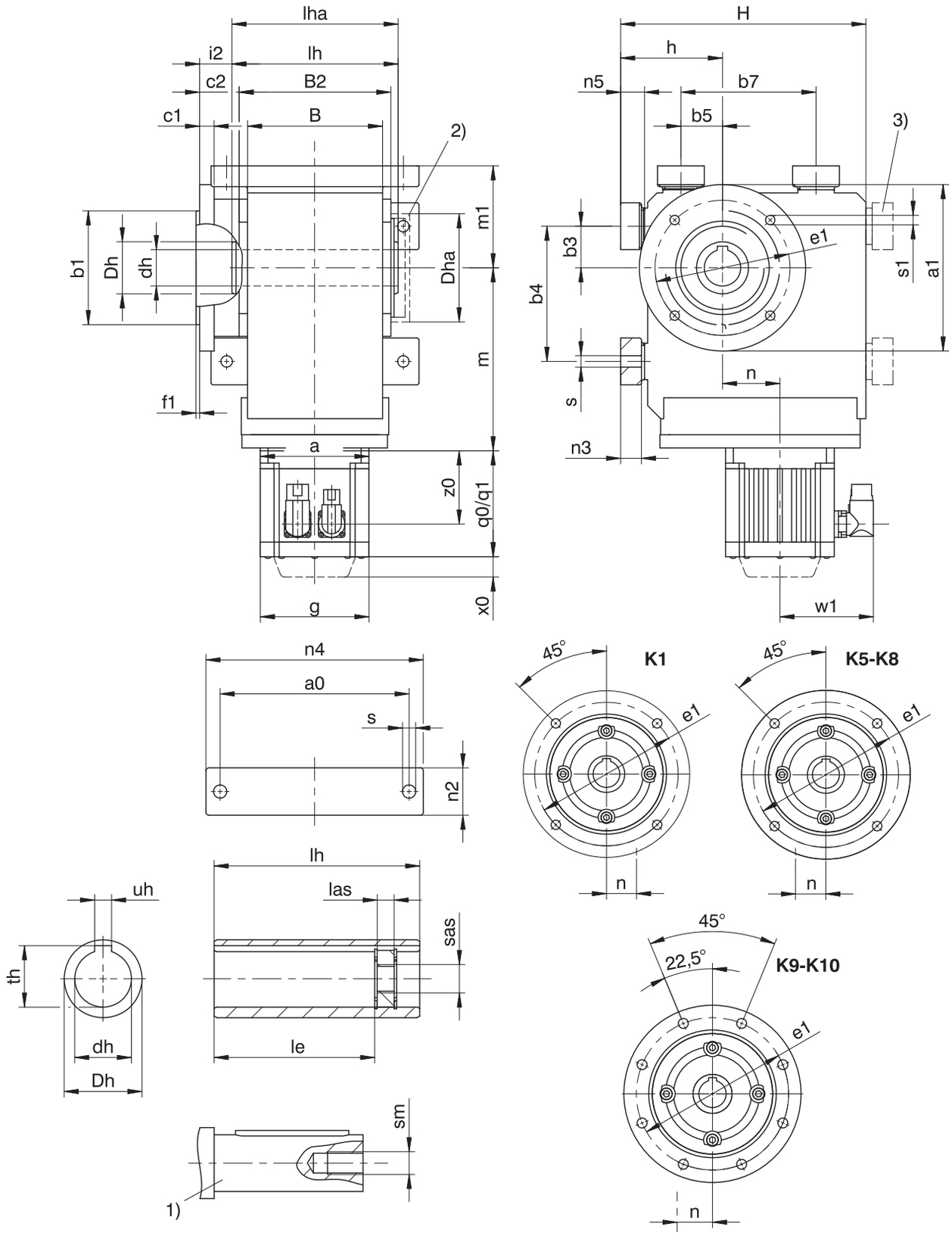

q0	Applies to motors without brake.	q1	Applies to motors with brake.
x0	Applies to encoders using an optical measuring method.	w1	Different for the One Cable Solution (OCS), see the chapter [▸ 17.4]
1)	The length of the machine shaft must be at least 2.2 x ∅dh and the length of the feather key must be at least 2 x ∅dh.	2)	Cover (optional)
3)	Only for K1 (other sizes on request)		

Dimensions of gear units

Type	a0	Øa1	Øb1	b3	b4	b5	b7	B	B2	c1	c2	Ødh	ØDh	Dha	Øe1	f1	h
K1	115	160	110_{j6}	30	90	30	90	90	106	10	32.0	20^{H7}	40	□105	130	3.5	75
K1	115	160	110_{j6}	30	90	30	90	90	106	10	32.0	25^{H7}	40	□105	130	3.5	75
K1	115	160	110_{j6}	30	90	30	90	90	106	10	32.0	30^{H7}	40	□105	130	3.5	75
K5	200	250	180_{j6}	40	140	100	140	160	185	15	39.5	50^{H7}	65	□145	215	4.0	190
K6	210	300	230_{j6}	50	160	110	160	168	200	17	36.0	50^{H7}	70	∅183	265	4.0	220
K7	241	350	250_{h6}	55	180	125	180	190	226	18	44.0	60^{H7}	85	∅205	300	5.0	250
K8	300	400	300_{h6}	75	240	165	240	235	282	20	45.0	70^{H7}	100	∅184	350	5.0	310
K9	360	450	350_{h6}	95	280	185	280	285	330	23	50.0	90^{H7}	120	∅230	400	5.0	365
K10	330	550	450_{h6}	115	350	265	420	400	356	25	78.0	100^{H7}	130	∅200	500	5.0	420

Dimensions of gear units

Type	H	i2	le	lh	las	lha	m1	n2	n3	n4	n5	Øs	Øs1	sm	sas	th	uh
K1	175	25.0	98.0	120	12	127.0	75	30	13	140	15	9.0	9	M6	M8	22.8	6^{JS9}
K1	175	25.0	98.0	120	12	127.0	75	30	13	140	15	9.0	9	M10	M12	28.3	8^{JS9}
K1	175	25.0	93.5	120	12	127.0	75	30	13	140	15	9.0	9	M10	M12	32.0	8^{JS9}
K5	290	32.0	164.0	200	12	209.5	130	60	27	240	30	18.0	14	M16	M20	53.8	14^{JS9}
K6	340	28.5	179.0	215	12	224.5	150	65	27	250	30	18.5	14	M16	M20	53.8	14^{JS9}
K7	380	36.0	214.0	242	12	252.0	163	70	35	290	38	23.0	18	M20	M24	64.4	18^{JS9}
K8	455	36.0	263.0	300	20	311.0	190	85	41	360	45	27.0	18	M20	M24	74.9	20^{JS9}
K9	545	40.0	302.0	350	26	361.0	230	95	46	430	50	31.0	18	M24	M30	95.4	25^{JS9}
K10	636	51.0	361.0	410	26	441.0	270	120	–	400	45	39.0	18	M24	M30	106.4	28^{JS9}

Dimensions of additional round flanges

Type	Øa1	Øb1	c1	Øe1	f1	Øs1
K1	140	95_{j6}	10	115	3.0	9
K8	350	250_{h6}	18	300	5.0	18
K8	450	350_{h6}	20	400	5.0	18

Dimensions of motors

Type	□g	q0	q1	w1	x0	z0
EZ301U	72	114.0	154.0	55.5	21	78.5
EZ302U	72	136.0	176.0	55.5	21	100.5
EZ303U	72	158.0	198.0	55.5	21	122.5
EZ401U	98	118.5	167.0	91.0	22	76.5
EZ402U	98	143.5	192.0	91.0	22	101.5
EZ404U	98	193.5	242.0	91.0	22	151.5
EZ501U	115	112.0	166.5	100.0	22	77.5
EZ502U	115	137.0	191.5	100.0	22	102.5
EZ503U	115	162.0	216.5	100.0	22	127.5
EZ505U	115	212.0	266.5	100.0	22	177.5
EZ701U	145	125.0	184.0	115.0	22	87.0
EZ702U	145	150.0	209.0	115.0	22	112.0
EZ703U	145	175.0	234.0	115.0	22	137.0
EZ705U	145	230.0	289.0	134.0	22	188.0
EZ802U	190	232.5	309.5	156.5	22	178.5
EZ803U	190	273.5	350.5	156.5	22	219.5
EZ805U	190	355.5	432.5	156.5	22	301.5

The dimensions a, m and n can be found on the next page.

Dimensions of geared motors

Type	EZ3			EZ4			EZ5			EZ7			EZ8		
	a	m	n	a	m	n	a	m	n	a	m	n	a	m	n
K102	□72	124	36.0	□98	124	36.0	□115	128	36.0	□145	130	36.0	–	–	–
K513	–	–	–	–	–	–	∅160	172	15.0	□145	174	15.0	□190	177	15.0
K514	–	–	–	–	–	–	∅160	215	15.0	–	–	–	–	–	–
K613	–	–	–	–	–	–	∅160	191	18.0	∅200	193	18.0	□190	196	18.0
K614	–	–	–	–	–	–	∅160	234	18.0	–	–	–	–	–	–
K713	–	–	–	–	–	–	–	–	–	∅200	221	20.0	□190	224	20.0
K714	–	–	–	–	–	–	∅160	263	20.0	∅200	283	20.0	–	–	–
K813	–	–	–	–	–	–	–	–	–	∅200	247	24.0	∅250	249	24.0
K814	–	–	–	–	–	–	–	–	–	∅200	308	24.0	∅250	320	5.0
K913	–	–	–	–	–	–	–	–	–	–	–	–	∅250	294	25.0
K914	–	–	–	–	–	–	–	–	–	∅200	353	25.0	∅250	365	25.0
K1014	–	–	–	–	–	–	–	–	–	–	–	–	∅250	450	28.0

16.3.7 S shaft design (hollow shaft with shrink disk), G housing design (pitch circle diameter)

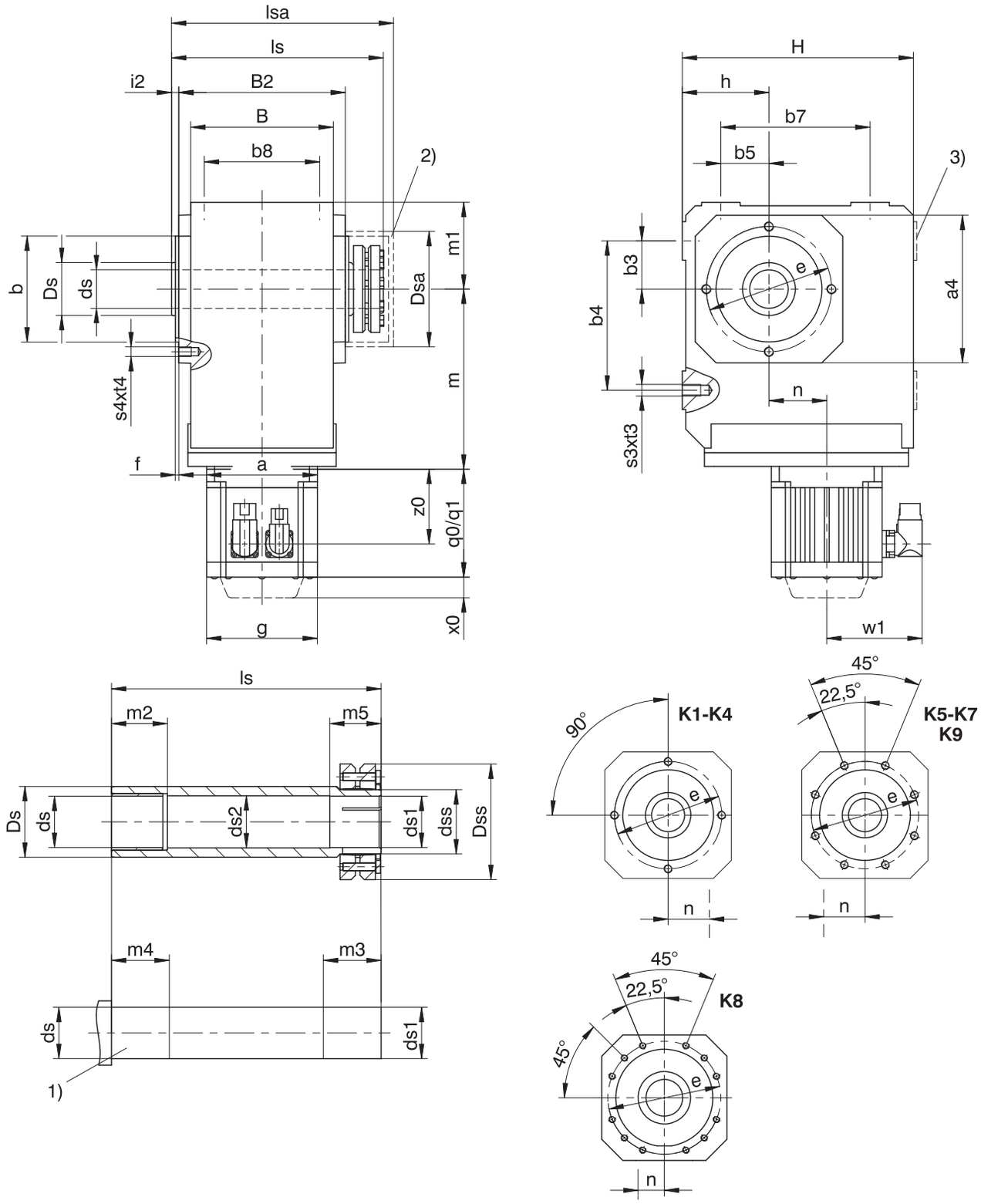

q0	Applies to motors without brake.	q1	Applies to motors with brake.
x0	Applies to encoders using an optical measuring method.	w1	Different for the One Cable Solution (OCS), see the chapter [▸ 17.4]
1)	Machine shaft: The dimension ls must meet or exceed the specified value.	2)	Cover (optional)
3)	Only for K1 (other sizes on request)		

Dimensions of gear units

Type	□a4	Øb	b3	b4	b5	b7	b8	B	B2	Øds	Øds1	Øds2	Ødss	ØDs	ØDsa	ØDss	Øe	f	h	H	i2	ls	lsa	m1	m2	m3	m4	m5	s3	s4	t3	t4
K1	105	75_{j6}	30	90	30	90	70	90	106	25_{h9}	25_{h9}^{H7}	25.5	30	40	80	60	90	3.0	60	160	7.0	149	163	60	20	34	25	29	M8	M8	13	13
K2	116	82_{j6}	35	115	35	115	90	115	134	30_{h9}	30_{h9}^{H7}	30.5	36	45	88	72	100	3.0	65	190	7.0	178	193	65	25	39	30	34	M10	M8	16	13
K3	132	95_{j6}	40	130	40	130	105	130	146	35_{h9}	35_{h9}^{H7}	35.5	44	50	101	80	115	3.0	75	213	7.0	190	206	75	30	39	35	34	M10	M8	16	13
K4	152	110_{j6}	50	155	50	155	120	148	173	40_{h9}	40_{h9}^{H7}	40.5	50	55	114	88	130	3.5	90	240	7.5	220	243	90	40	39	45	34	M12	M10	19	16
K5	145	110_{j6}	40	140	100	140	125	160	185	50_{h9}	50_{h9}^{H7}	50.5	62	65	116	106	130	3.5	160	260	7.5	237	254	100	40	44	45	39	M16	M10	26	16
K6	180	140_{j6}	50	160	110	160	130	168	200	50_{h9}	50_{h9}^{H7}	50.5	62	70	128	106	165	3.5	190	310	7.5	254	276	120	40	45	45	40	M16	M10	26	16
K7	195	155_{h6}	55	180	125	180	145	190	226	60_{h6}	60_{h6}^{H7}	62.0	75	85	161.5	138	185	3.5	212	342	8.0	278	314	125	40	45	45	40	M20	M12	33	19
K8	226	185_{h6}	75	240	165	240	185	235	282	70_{h6}	70_{h6}^{H7}	72.0	90	100	193	155	215	4.0	265	410	9.0	352	378	145	50	60	60	50	M24	M12	38	19
K9	280	230_{h6}	95	280	185	280	225	285	330	90_{h6}	90_{h6}^{H7}	92.0	120	120	244	200	265	5.0	315	495	10.0	418	428	180	60	70	70	60	M30	M16	48	26

Dimensions of motors

Type	□g	q0	q1	w1	x0	z0
EZ301U	72	114.0	154.0	55.5	21	78.5
EZ302U	72	136.0	176.0	55.5	21	100.5
EZ303U	72	158.0	198.0	55.5	21	122.5
EZ401U	98	118.5	167.0	91.0	22	76.5
EZ402U	98	143.5	192.0	91.0	22	101.5
EZ404U	98	193.5	242.0	91.0	22	151.5
EZ501U	115	112.0	166.5	100.0	22	77.5
EZ502U	115	137.0	191.5	100.0	22	102.5
EZ503U	115	162.0	216.5	100.0	22	127.5
EZ505U	115	212.0	266.5	100.0	22	177.5
EZ701U	145	125.0	184.0	115.0	22	87.0
EZ702U	145	150.0	209.0	115.0	22	112.0
EZ703U	145	175.0	234.0	115.0	22	137.0
EZ705U	145	230.0	289.0	134.0	22	188.0
EZ802U	190	232.5	309.5	156.5	22	178.5
EZ803U	190	273.5	350.5	156.5	22	219.5
EZ805U	190	355.5	432.5	156.5	22	301.5

Dimensions of geared motors

Type	EZ3			EZ4			EZ5			EZ7			EZ8		
	a	m	n	a	m	n	a	m	n	a	m	n	a	m	n
K102	□72	124	36.0	□98	124	36.0	□115	128	36.0	□145	130	36.0	–	–	–
K202	□72	143	46.0	□98	143	46.0	□115	147	46.0	□145	149	46.0	–	–	–
K203	∅140	180	46.0	∅140	180	46.0	–	–	–	–	–	–	–	–	–
K302	∅140	163	52.5	∅140	163	52.5	□115	167	52.5	□145	169	52.5	–	–	–
K303	∅140	200	52.5	∅140	200	52.5	∅160	210	16.0	–	–	–	–	–	–
K402	–	–	–	–	–	–	∅160	187	60.0	□145	189	60.0	□190	192	60.0
K403	∅140	220	60.0	∅140	220	60.0	∅160	230	23.0	–	–	–	–	–	–
K513	–	–	–	–	–	–	∅160	172	15.0	□145	174	15.0	□190	177	15.0
K514	–	–	–	–	–	–	∅160	215	15.0	–	–	–	–	–	–
K613	–	–	–	–	–	–	∅160	191	18.0	∅200	193	18.0	□190	196	18.0
K614	–	–	–	–	–	–	∅160	234	18.0	–	–	–	–	–	–
K713	–	–	–	–	–	–	–	–	–	∅200	221	20.0	□190	224	20.0
K714	–	–	–	–	–	–	∅160	263	20.0	∅200	283	20.0	–	–	–
K813	–	–	–	–	–	–	–	–	–	∅200	247	24.0	∅250	249	24.0
K814	–	–	–	–	–	–	–	–	–	∅200	308	24.0	∅250	320	5.0
K913	–	–	–	–	–	–	–	–	–	–	–	–	∅250	294	25.0
K914	–	–	–	–	–	–	–	–	–	∅200	353	25.0	∅250	365	25.0

16.3.8 S shaft design (hollow shaft with shrink disk), NG housing design (base + pitch circle diameter)

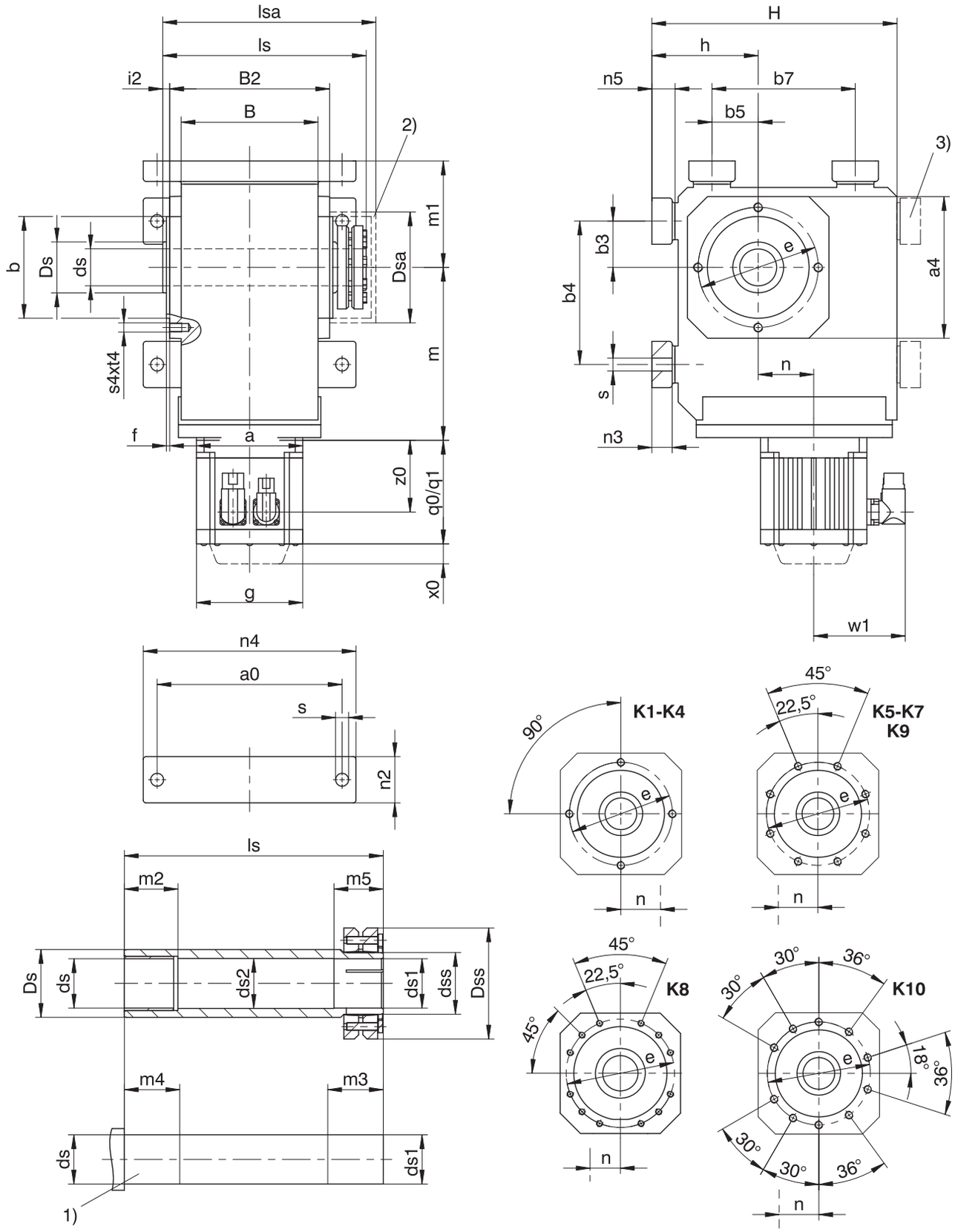

q0	Applies to motors without brake.	q1	Applies to motors with brake.
x0	Applies to encoders using an optical measuring method.	w1	Different for the One Cable Solution (OCS), see the chapter [▶ 17.4]
1)	Machine shaft: The dimension ls must meet or exceed the specified value.	2)	Cover (optional)
3)	Only for K1 (other sizes on request)		

Dimensions of gear units

Type	a0	a4	Øb	b3	b4	b5	b7	B	B2	Øds	Øds1	Øds2	Ødss	ØDs	ØDsa
K1	115	105	75_{j6}	30	90	30	90	90	106	25_{h9}	25_{h9}^{H7}	25.5	30	40	80
K2	155	116	82_{j6}	35	115	35	115	115	134	30_{h9}	30_{h9}^{H7}	30.5	36	45	88
K3	170	132	95_{j6}	40	130	40	130	130	146	35_{h9}	35_{h9}^{H7}	35.5	44	50	101
K4	200	152	110_{j6}	50	155	50	155	148	173	40_{h9}	40_{h9}^{H7}	40.5	50	55	114
K5	200	145	110_{j6}	40	140	100	140	160	185	50_{h9}	50_{h9}^{H7}	50.5	62	65	116
K6	210	180	140_{j6}	50	160	110	160	168	200	50_{h9}	50_{h9}^{H7}	50.5	62	70	128
K7	241	195	155_{j6}	55	180	125	180	190	226	60_{h6}	60_{h6}^{H7}	62.0	75	85	161.5
K8	300	226	185_{j6}	75	240	165	240	235	282	70_{h6}	70_{h6}^{H7}	72.0	90	100	193
K9	360	280	230_{j6}	95	280	185	280	285	330	90_{h6}	90_{h6}^{H7}	92.0	120	120	244
K10	330	340	250_{h6}	115	350	265	420	400	356	100_{h6}	100_{h6}^{H7}	102.0	130	130	274

Dimensions of gear units

Type	ØDss	Øe	f	h	H	i2	ls	lsa	m1	m2	m3	m4	m5	n2	n3	n4	n5	Øs	s4	t4
K1	60	90	3.0	75	175	7.0	149	163	75	20	34	25	29	30	13	140	15	9.0	M8	13
K2	72	100	3.0	88	213	7.0	178	193	88	25	39	30	34	40	20	185	23	11.0	M8	13
K3	80	115	3.0	98	236	7.0	190	206	98	30	39	35	34	45	20	200	23	11.0	M8	13
K4	88	130	3.5	115	265	7.5	220	243	115	40	39	45	34	50	22	230	25	14.0	M10	16
K5	106	130	3.5	190	290	7.5	237	254	130	40	44	45	39	60	27	240	30	18.0	M10	16
K6	106	165	3.5	220	340	7.5	254	276	150	40	45	45	40	65	27	250	30	18.5	M10	16
K7	138	185	3.5	250	380	8.0	278	314	163	40	45	45	40	70	35	290	38	23.0	M12	19
K8	155	215	4.0	310	455	9.0	352	378	190	50	60	60	50	85	41	360	45	27.0	M12	19
K9	200	265	5.0	365	545	10.0	418	428	230	60	70	70	60	95	46	430	50	31.0	M16	26
K10	215	300	20.0	420	636	27.0	483	497	270	60	80	70	70	120	–	400	45	39.0	M20	33

Dimensions of motors

Type	□g	q0	q1	w1	x0	z0
EZ301U	72	114.0	154.0	55.5	21	78.5
EZ302U	72	136.0	176.0	55.5	21	100.5
EZ303U	72	158.0	198.0	55.5	21	122.5
EZ401U	98	118.5	167.0	91.0	22	76.5
EZ402U	98	143.5	192.0	91.0	22	101.5
EZ404U	98	193.5	242.0	91.0	22	151.5
EZ501U	115	112.0	166.5	100.0	22	77.5
EZ502U	115	137.0	191.5	100.0	22	102.5
EZ503U	115	162.0	216.5	100.0	22	127.5
EZ505U	115	212.0	266.5	100.0	22	177.5
EZ701U	145	125.0	184.0	115.0	22	87.0
EZ702U	145	150.0	209.0	115.0	22	112.0
EZ703U	145	175.0	234.0	115.0	22	137.0
EZ705U	145	230.0	289.0	134.0	22	188.0
EZ802U	190	232.5	309.5	156.5	22	178.5
EZ803U	190	273.5	350.5	156.5	22	219.5
EZ805U	190	355.5	432.5	156.5	22	301.5

The dimensions a, m and n can be found on the next page.

Dimensions of geared motors

Type	EZ3			EZ4			EZ5			EZ7			EZ8		
	a	m	n	a	m	n	a	m	n	a	m	n	a	m	n
K102	□72	124	36.0	□98	124	36.0	□115	128	36.0	□145	130	36.0	–	–	–
K202	□72	143	46.0	□98	143	46.0	□115	147	46.0	□145	149	46.0	–	–	–
K203	∅140	180	46.0	∅140	180	46.0	–	–	–	–	–	–	–	–	–
K302	∅140	163	52.5	∅140	163	52.5	□115	167	52.5	□145	169	52.5	–	–	–
K303	∅140	200	52.5	∅140	200	52.5	∅160	210	16.0	–	–	–	–	–	–
K402	–	–	–	–	–	–	∅160	187	60.0	□145	189	60.0	□190	192	60.0
K403	∅140	220	60.0	∅140	220	60.0	∅160	230	23.0	–	–	–	–	–	–
K513	–	–	–	–	–	–	∅160	172	15.0	□145	174	15.0	□190	177	15.0
K514	–	–	–	–	–	–	∅160	215	15.0	–	–	–	–	–	–
K613	–	–	–	–	–	–	∅160	191	18.0	∅200	193	18.0	□190	196	18.0
K614	–	–	–	–	–	–	∅160	234	18.0	–	–	–	–	–	–
K713	–	–	–	–	–	–	–	–	–	∅200	221	20.0	□190	224	20.0
K714	–	–	–	–	–	–	∅160	263	20.0	∅200	283	20.0	–	–	–
K813	–	–	–	–	–	–	–	–	–	∅200	247	24.0	∅250	249	24.0
K814	–	–	–	–	–	–	–	–	–	∅200	308	24.0	∅250	320	5.0
K913	–	–	–	–	–	–	–	–	–	–	–	–	∅250	294	25.0
K914	–	–	–	–	–	–	–	–	–	∅200	353	25.0	∅250	365	25.0
K1014	–	–	–	–	–	–	–	–	–	–	–	–	∅250	450	28.0

16.3.9 S shaft design (hollow shaft with shrink ring), GD housing design (pitch circle diameter + torque arm bracket)

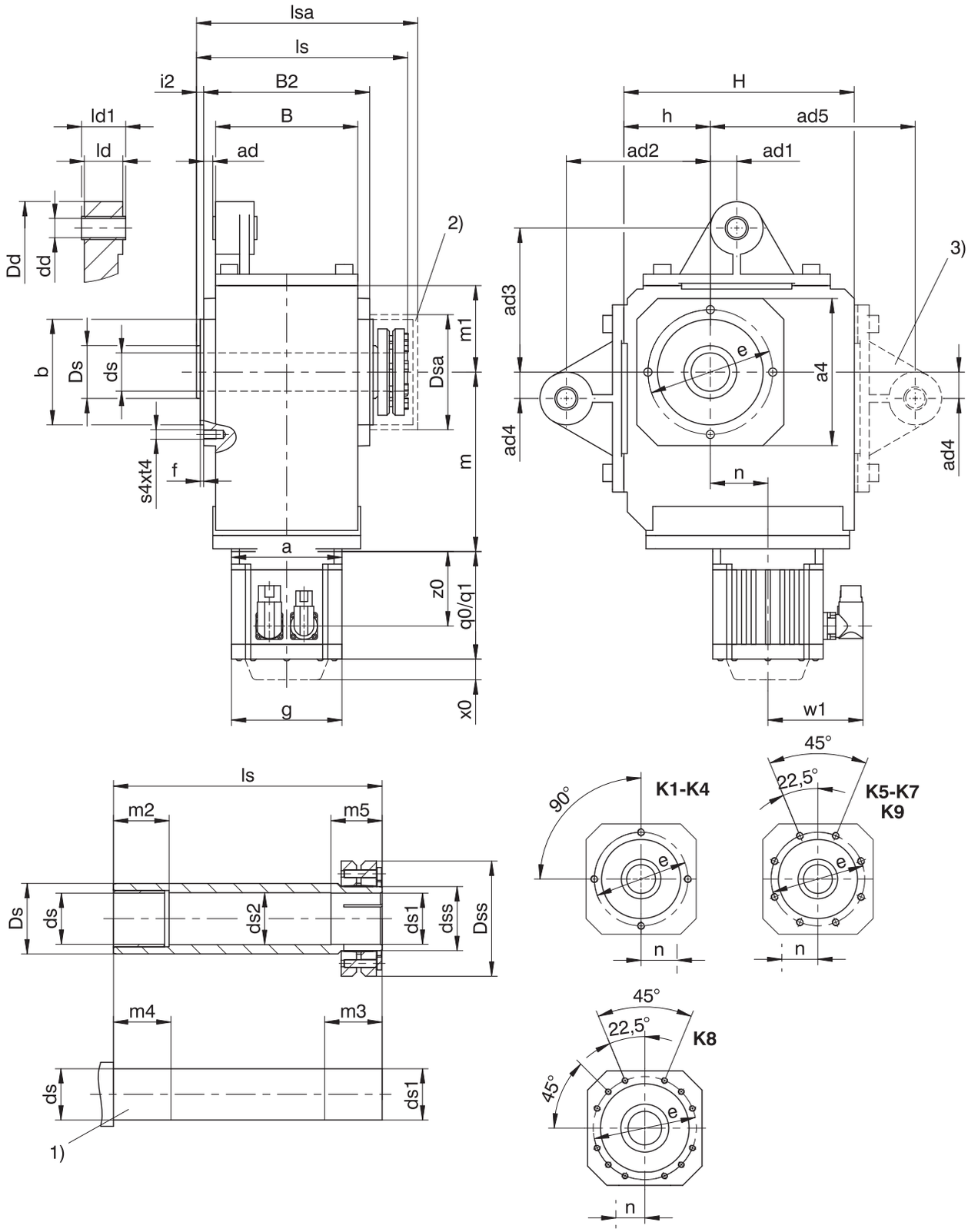

q0	Applies to motors without brake.	q1	Applies to motors with brake.
x0	Applies to encoders using an optical measuring method.	w1	Different for the One Cable Solution (OCS), see the chapter [▸ 17.4]
1)	Machine shaft: The dimension ls must meet or exceed the specified value.	2)	Cover (optional)
3)	Only for K1 (other sizes on request)	–	If you brace the gear units without the torque arm brackets provided by the manufacturer for this purpose, the dimensions for ad2 and ad3 must meet the specified value.

Dimensions of gear units

Type	□a4	ad	ad1	ad2	ad3	ad4	ad5	Øb	B	B2	Ødd	Øds	Øds1	Øds2	Ødss	ØDd	ØDs	ØDsa
K1	105	6.0	15.0	90	90	15.0	130	75_{j6}	90	106	12^{H9}	25_{h9}	$25_{h9}{}^{H7}$	25.5	30	43	40	80
K2	116	6.5	22.5	100	100	22.5	–	82_{j6}	115	134	16^{H9}	30_{h9}	$30_{h9}{}^{H7}$	30.5	36	45	45	88
K3	132	5.0	25.0	120	120	25.0	–	95_{j6}	130	146	16^{H9}	35_{h9}	$35_{h9}{}^{H7}$	35.5	44	45	50	101
K4	152	9.5	27.5	150	150	27.5	–	110_{j6}	148	173	20^{H9}	40_{h9}	$40_{h9}{}^{H7}$	40.5	50	55	55	114
K5	145	9.5	30.0	250	190	30.0	–	110_{j6}	160	185	20^{H9}	50_{h9}	$50_{h9}{}^{H7}$	50.5	62	58	65	116
K6	180	13.0	30.0	250	180	30.0	–	140_{j6}	168	200	20^{H9}	50_{h9}	$50_{h9}{}^{H7}$	50.5	62	58	70	128
K7	195	15.0	35.0	300	213	35.0	–	155_{h6}	190	226	20^{H9}	60_{h6}	$60_{h6}{}^{H7}$	62.0	75	68	85	161.5
K8	226	17.0	45.0	350	230	45.0	–	185_{h6}	235	282	24^{H9}	70_{h6}	$70_{h6}{}^{H7}$	72.0	90	72	100	193
K9	280	16.0	45.0	450	315	45.0	–	230_{h6}	285	330	24^{H9}	90_{h6}	$90_{h6}{}^{H7}$	92.0	120	75	120	244

Dimensions of gear units

Type	ØDss	Øe	f	h	H	i2	ld	ld1	ls	lsa	m1	m2	m3	m4	m5	s4	t4
K1	60	90	3.0	60	160	7.0	24	28	149	163	60	20	34	25	29	M8	13
K2	72	100	3.0	65	190	7.0	32	38	178	193	65	25	39	30	34	M8	13
K3	80	115	3.0	75	213	7.0	32	38	190	206	75	30	39	35	34	M8	13
K4	88	130	3.5	90	240	7.5	40	46	220	243	90	40	39	45	34	M10	16
K5	106	130	3.5	160	260	7.5	40	46	237	254	100	40	44	45	39	M10	16
K6	106	165	3.5	190	310	7.5	40	46	254	276	120	40	45	45	40	M10	16
K7	138	185	3.5	212	342	8.0	64	70	278	314	125	40	45	45	40	M12	19
K8	155	215	4.0	265	410	9.0	102	115	352	378	145	50	60	60	50	M12	19
K9	200	265	5.0	315	495	10.0	102	115	418	428	180	60	70	70	60	M16	26

Dimensions of motors

Type	□g	q0	q1	w1	x0	z0
EZ301U	72	114.0	154.0	55.5	21	78.5
EZ302U	72	136.0	176.0	55.5	21	100.5
EZ303U	72	158.0	198.0	55.5	21	122.5
EZ401U	98	118.5	167.0	91.0	22	76.5
EZ402U	98	143.5	192.0	91.0	22	101.5
EZ404U	98	193.5	242.0	91.0	22	151.5
EZ501U	115	112.0	166.5	100.0	22	77.5
EZ502U	115	137.0	191.5	100.0	22	102.5
EZ503U	115	162.0	216.5	100.0	22	127.5
EZ505U	115	212.0	266.5	100.0	22	177.5
EZ701U	145	125.0	184.0	115.0	22	87.0
EZ702U	145	150.0	209.0	115.0	22	112.0
EZ703U	145	175.0	234.0	115.0	22	137.0
EZ705U	145	230.0	289.0	134.0	22	188.0
EZ802U	190	232.5	309.5	156.5	22	178.5
EZ803U	190	273.5	350.5	156.5	22	219.5
EZ805U	190	355.5	432.5	156.5	22	301.5

The dimensions a, m and n can be found on the next page.

Dimensions of geared motors

Type	EZ3			EZ4			EZ5			EZ7			EZ8		
	a	m	n	a	m	n	a	m	n	a	m	n	a	m	n
K102	□72	124	36.0	□98	124	36.0	□115	128	36.0	□145	130	36.0	–	–	–
K202	□72	143	46.0	□98	143	46.0	□115	147	46.0	□145	149	46.0	–	–	–
K203	∅140	180	46.0	∅140	180	46.0	–	–	–	–	–	–	–	–	–
K302	∅140	163	52.5	∅140	163	52.5	□115	167	52.5	□145	169	52.5	–	–	–
K303	∅140	200	52.5	∅140	200	52.5	∅160	210	16.0	–	–	–	–	–	–
K402	–	–	–	–	–	–	∅160	187	60.0	□145	189	60.0	□190	192	60.0
K403	∅140	220	60.0	∅140	220	60.0	∅160	230	23.0	–	–	–	–	–	–
K513	–	–	–	–	–	–	∅160	172	15.0	□145	174	15.0	□190	177	15.0
K514	–	–	–	–	–	–	∅160	215	15.0	–	–	–	–	–	–
K613	–	–	–	–	–	–	∅160	191	18.0	∅200	193	18.0	□190	196	18.0
K614	–	–	–	–	–	–	∅160	234	18.0	–	–	–	–	–	–
K713	–	–	–	–	–	–	–	–	–	∅200	221	20.0	□190	224	20.0
K714	–	–	–	–	–	–	∅160	263	20.0	∅200	283	20.0	–	–	–
K813	–	–	–	–	–	–	–	–	–	∅200	247	24.0	∅250	249	24.0
K814	–	–	–	–	–	–	–	–	–	∅200	308	24.0	∅250	320	5.0
K913	–	–	–	–	–	–	–	–	–	–	–	–	∅250	294	25.0
K914	–	–	–	–	–	–	–	–	–	∅200	353	25.0	∅250	365	25.0

16.3.10 S shaft design (hollow shaft with shrink ring), NGD housing design (foot + pitch circle diameter + torque arm bracket)

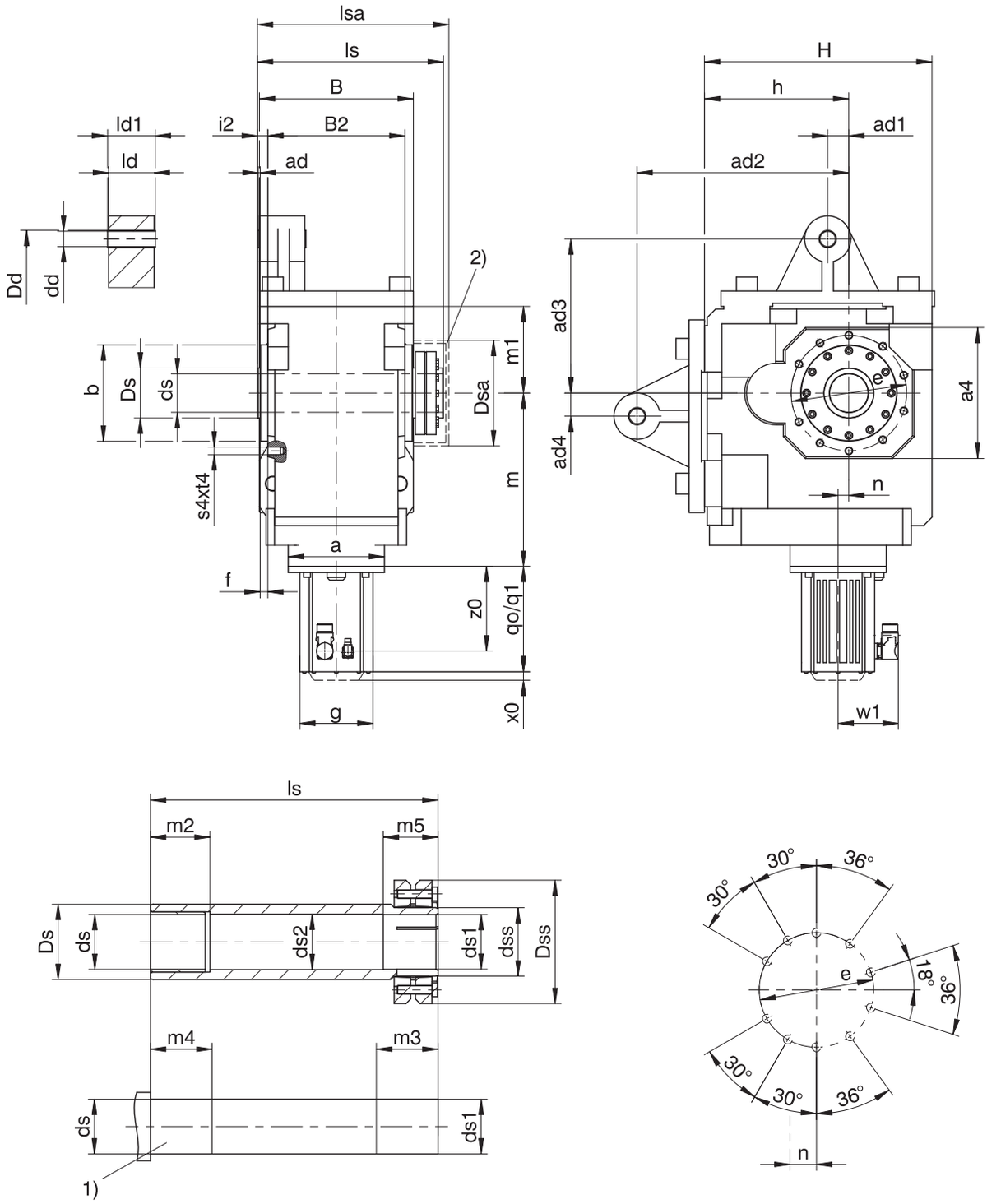

q0	Applies to motors without brake.	q1	Applies to motors with brake.
x0	Applies to encoders using an optical measuring method.	w1	Different for the One Cable Solution (OCS), see the chapter [▸ 17.4]
1)	Machine shaft: The dimension ls must meet or exceed the specified value.	2)	Cover (optional)
–	If you brace the gear units without the torque arm brackets provided by the manufacturer for this purpose, the dimensions for ad2 and ad3 must meet the specified value.		

Dimensions of gear units

Type	□a4	ad	ad1	ad2	ad3	ad4	Øb	B	B2	Ødd	Øds	Øds1	Øds2	Ødss	ØDd	ØDs	ØDsa
K10	340	5	55	550	400	60	250_{h6}	400	356	40^{H9}	100_{h6}	100_{h6}^{H7}	102	130	120	130	274

Dimensions of gear units

Type	ØDss	Øe	f	h	H	i2	ld	ld1	ls	lsa	m1	m2	m3	m4	m5	s4	t4
K10	215	300	20	375	591	27	118	124	483	497	225	60	80	70	70	M20	33

Dimensions of motors

Type	□g	q0	q1	w1	x0	z0
EZ802U	190	232.5	309.5	156.5	22	178.5
EZ803U	190	273.5	350.5	156.5	22	219.5

Dimensions of geared motors

Type	EZ8		
	a	m	n
K1014	∅250	450	28.0

16.3.11 S shaft design (hollow shaft with shrink disk), F housing design (round flange)

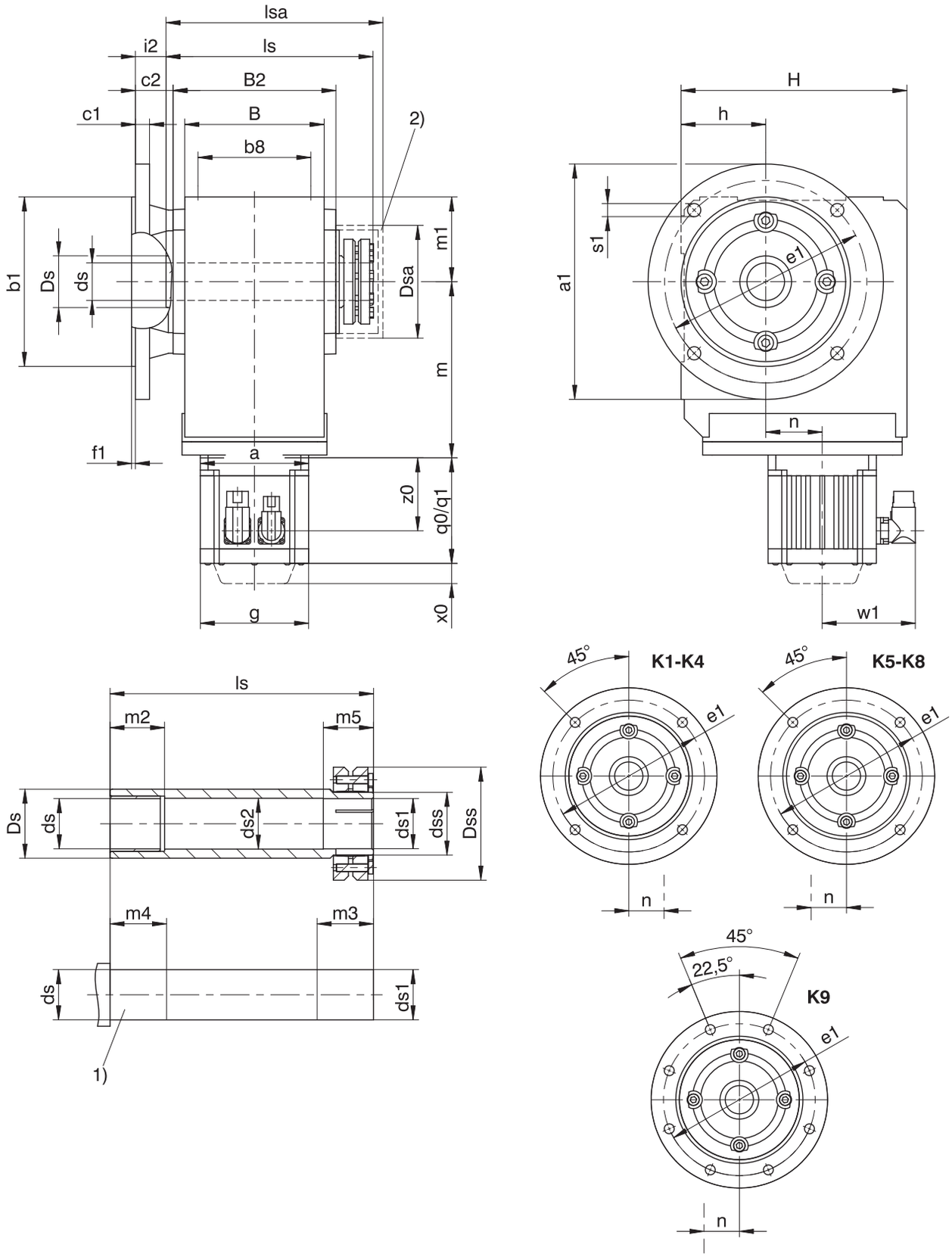

q0	Applies to motors without brake.	q1	Applies to motors with brake.
x0	Applies to encoders using an optical measuring method.	w1	Different for the One Cable Solution (OCS), see the chapter [▸ 17.4]
1)	Machine shaft: The dimension ls must meet or exceed the specified value.	2)	Cover (optional)

Dimensions of gear units

Type	Øa1	Øb1	b8	B	B2	c1	c2	Øds	Øds1	Øds2	Ødss	ØDs	ØDsa	ØDss	Øe1	f1	h	H	i2	ls	lsa	m1	m2	m3	m4	m5	Øs1
K1	160	110_{j6}	70	90	106	10	32.0	25_{h9}	25_{h9}^{H7}	25.5	30	40	80	60	130	3.5	60	160	25.0	149	163	60	20	34	25	29	9
K2	200	130_{j6}	90	115	134	12	32.0	30_{h9}	30_{h9}^{H7}	30.5	36	45	88	72	165	3.5	65	190	25.0	178	193	65	25	39	30	34	11
K3	200	130_{j6}	105	130	146	14	38.0	35_{h9}	35_{h9}^{H7}	35.5	44	50	101	80	165	3.5	75	213	31.0	190	206	75	30	39	35	34	11
K4	250	180_{j6}	120	148	173	15	40.0	40_{h9}	40_{h9}^{H7}	40.5	50	55	114	88	215	4.0	90	240	32.5	220	243	90	40	39	45	34	14
K5	250	180_{j6}	125	160	185	15	39.5	50_{h9}	50_{h9}^{H7}	50.5	62	65	116	106	215	4.0	160	260	32.0	237	254	100	40	44	45	39	14
K6	300	230_{j6}	130	168	200	17	36.0	50_{h9}	50_{h9}^{H7}	50.5	62	70	128	106	265	4.0	190	310	28.5	254	276	120	40	45	45	40	14
K7	350	250_{h6}	145	190	226	18	44.0	60_{h6}	60_{h6}^{H7}	62.0	75	85	161.5	138	300	5.0	212	342	36.0	278	314	125	40	45	45	40	18
K8	400	300_{h6}	185	235	282	20	45.0	70_{h6}	70_{h6}^{H7}	72.0	90	100	193	155	350	5.0	265	410	36.0	352	378	145	50	60	60	50	18
K9	450	350_{h6}	225	285	330	23	50.0	90_{h6}	90_{h6}^{H7}	92.0	120	120	244	200	400	5.0	315	495	40.0	418	428	180	60	70	70	60	18

Dimensions of additional round flanges

Type	Øa1	Øb1	c1	Øe1	f1	Øs1
K1	140	95_{j6}	10	115	3.0	9
K2	160	110_{j6}	12	130	3.5	9
K3	160	110_{j6}	14	130	3.5	9
K3	250	180_{j6}	14	215	4.0	14
K8	350	250_{h6}	18	300	5.0	18
K8	450	350_{h6}	20	400	5.0	18

Dimensions of motors

Type	□g	q0	q1	w1	x0	z0
EZ301U	72	114.0	154.0	55.5	21	78.5
EZ302U	72	136.0	176.0	55.5	21	100.5
EZ303U	72	158.0	198.0	55.5	21	122.5
EZ401U	98	118.5	167.0	91.0	22	76.5
EZ402U	98	143.5	192.0	91.0	22	101.5
EZ404U	98	193.5	242.0	91.0	22	151.5
EZ501U	115	112.0	166.5	100.0	22	77.5
EZ502U	115	137.0	191.5	100.0	22	102.5
EZ503U	115	162.0	216.5	100.0	22	127.5
EZ505U	115	212.0	266.5	100.0	22	177.5
EZ701U	145	125.0	184.0	115.0	22	87.0
EZ702U	145	150.0	209.0	115.0	22	112.0
EZ703U	145	175.0	234.0	115.0	22	137.0
EZ705U	145	230.0	289.0	134.0	22	188.0
EZ802U	190	232.5	309.5	156.5	22	178.5
EZ803U	190	273.5	350.5	156.5	22	219.5
EZ805U	190	355.5	432.5	156.5	22	301.5

The dimensions a, m and n can be found on the next page.

Dimensions of geared motors

Type	EZ3			EZ4			EZ5			EZ7			EZ8		
	a	m	n	a	m	n	a	m	n	a	m	n	a	m	n
K102	□72	124	36.0	□98	124	36.0	□115	128	36.0	□145	130	36.0	–	–	–
K202	□72	143	46.0	□98	143	46.0	□115	147	46.0	□145	149	46.0	–	–	–
K203	∅140	180	46.0	∅140	180	46.0	–	–	–	–	–	–	–	–	–
K302	∅140	163	52.5	∅140	163	52.5	□115	167	52.5	□145	169	52.5	–	–	–
K303	∅140	200	52.5	∅140	200	52.5	∅160	210	16.0	–	–	–	–	–	–
K402	–	–	–	–	–	–	∅160	187	60.0	□145	189	60.0	□190	192	60.0
K403	∅140	220	60.0	∅140	220	60.0	∅160	230	23.0	–	–	–	–	–	–
K513	–	–	–	–	–	–	∅160	172	15.0	□145	174	15.0	□190	177	15.0
K514	–	–	–	–	–	–	∅160	215	15.0	–	–	–	–	–	–
K613	–	–	–	–	–	–	∅160	191	18.0	∅200	193	18.0	□190	196	18.0
K614	–	–	–	–	–	–	∅160	234	18.0	–	–	–	–	–	–
K713	–	–	–	–	–	–	–	–	–	∅200	221	20.0	□190	224	20.0
K714	–	–	–	–	–	–	∅160	263	20.0	∅200	283	20.0	–	–	–
K813	–	–	–	–	–	–	–	–	–	∅200	247	24.0	∅250	249	24.0
K814	–	–	–	–	–	–	–	–	–	∅200	308	24.0	∅250	320	5.0
K913	–	–	–	–	–	–	–	–	–	–	–	–	∅250	294	25.0
K914	–	–	–	–	–	–	–	–	–	∅200	353	25.0	∅250	365	25.0

16.3.12 S shaft design (hollow shaft with shrink disk), NF housing design (base + round flange)

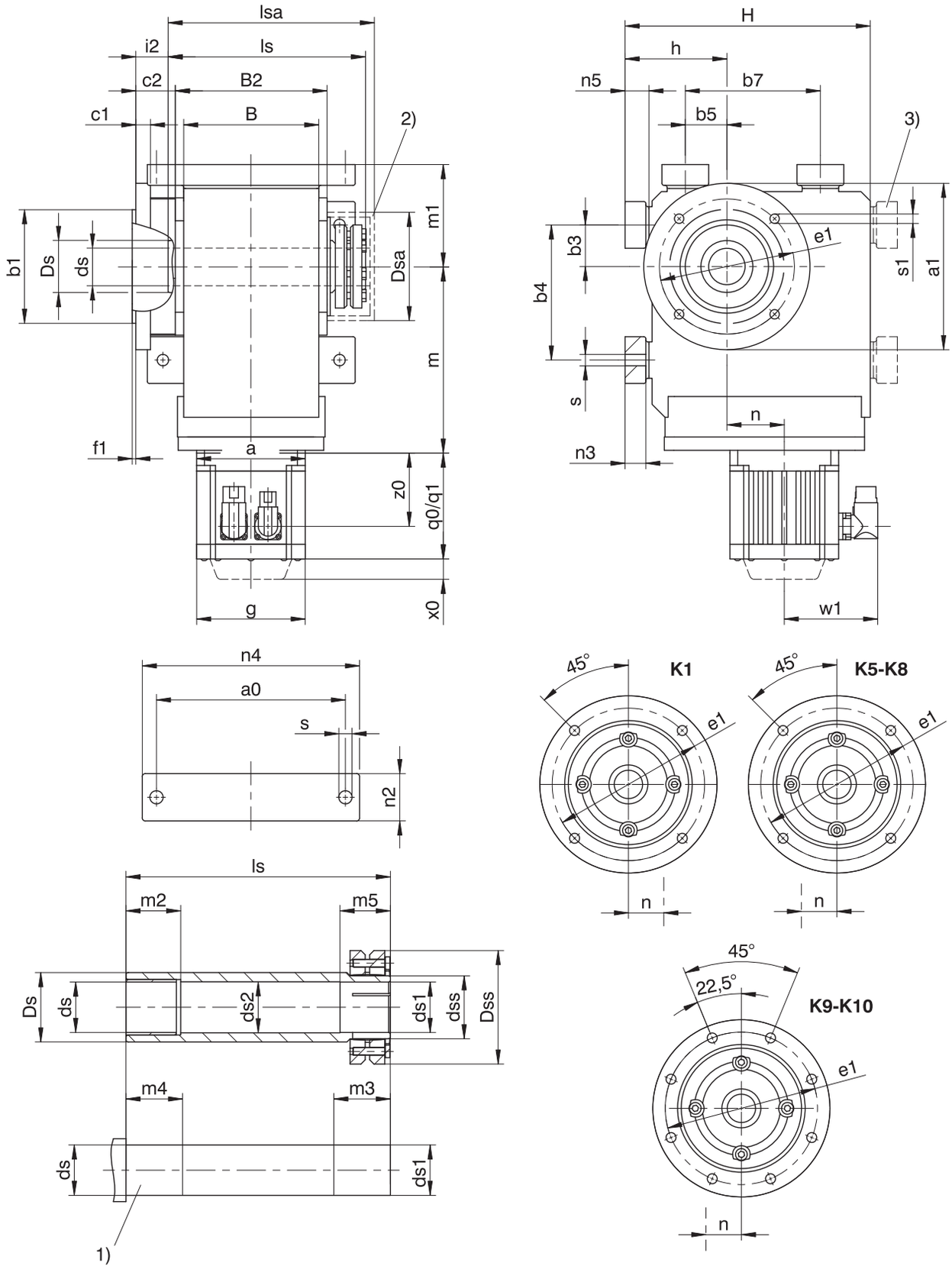

q0	Applies to motors without brake.	q1	Applies to motors with brake.
x0	Applies to encoders using an optical measuring method.	w1	Different for the One Cable Solution (OCS), see the chapter [▸ 17.4]
1)	Machine shaft: The dimension ls must meet or exceed the specified value.	2)	Cover (optional)
3)	Only for K1 (other sizes on request)		

Dimensions of gear units

Type	a0	Øa1	Øb1	b3	b4	b5	b7	B	B2	c1	Øds	Øds1	Øds2	Ødss	ØDs	ØDsa	ØDss
K1	115	160	110_{j6}	30	90	30	90	90	106	10	25_{h9}	25_{h9}^{H7}	25.5	30	40	80	60
K5	200	250	180_{j6}	40	140	100	140	160	185	15	50_{h9}	50_{h9}^{H7}	50.5	62	65	116	106
K6	210	300	230_{j6}	50	160	110	160	168	200	17	50_{h9}	50_{h9}^{H7}	50.5	62	70	128	106
K7	241	350	250_{h6}	55	180	125	180	190	226	18	60_{h6}	60_{h6}^{H7}	62.0	75	85	161.5	138
K8	300	400	300_{h6}	75	240	165	240	235	282	20	70_{h6}	70_{h6}^{H7}	72.0	90	100	193	155
K9	360	450	350_{h6}	95	280	185	280	285	330	23	90_{h6}	90_{h6}^{H7}	92.0	120	120	244	200
K10	330	550	450_{h6}	115	350	265	420	400	356	25	100_{h6}	100_{h6}^{H7}	102.0	130	130	274	215

Dimensions of gear units

Type	Øe1	f1	h	H	i2	ls	lsa	m1	m2	m3	m4	m5	n2	n3	n4	n5	Øs	Øs1
K1	130	3.5	75	175	25.0	149	163	75	20	34	25	29	30	13	140	15	9.0	9
K5	215	4.0	190	290	32.0	237	254	130	40	44	45	39	60	27	240	30	18.0	14
K6	265	4.0	220	340	28.5	254	276	150	40	45	45	40	65	27	250	30	18.5	14
K7	300	5.0	250	380	36.0	278	314	163	40	45	45	40	70	35	290	38	23.0	18
K8	350	5.0	310	455	36.0	352	378	190	50	60	60	50	85	41	360	45	27.0	18
K9	400	5.0	365	545	40.0	418	428	230	60	70	70	60	95	46	430	50	31.0	18
K10	500	5.0	420	636	51.0	483	497	270	60	80	70	70	120	–	400	45	39.0	18

Dimensions of additional round flanges

Type	Øa1	Øb1	c1	Øe1	f1	Øs1
K1	140	95_{j6}	10	115	3.0	9
K8	350	250_{h6}	18	300	5.0	18
K8	450	350_{h6}	20	400	5.0	18

Dimensions of motors

Type	□g	q0	q1	w1	x0	z0
EZ301U	72	114.0	154.0	55.5	21	78.5
EZ302U	72	136.0	176.0	55.5	21	100.5
EZ303U	72	158.0	198.0	55.5	21	122.5
EZ401U	98	118.5	167.0	91.0	22	76.5
EZ402U	98	143.5	192.0	91.0	22	101.5
EZ404U	98	193.5	242.0	91.0	22	151.5
EZ501U	115	112.0	166.5	100.0	22	77.5
EZ502U	115	137.0	191.5	100.0	22	102.5
EZ503U	115	162.0	216.5	100.0	22	127.5
EZ505U	115	212.0	266.5	100.0	22	177.5
EZ701U	145	125.0	184.0	115.0	22	87.0
EZ702U	145	150.0	209.0	115.0	22	112.0
EZ703U	145	175.0	234.0	115.0	22	137.0
EZ705U	145	230.0	289.0	134.0	22	188.0
EZ802U	190	232.5	309.5	156.5	22	178.5
EZ803U	190	273.5	350.5	156.5	22	219.5
EZ805U	190	355.5	432.5	156.5	22	301.5

The dimensions a, m and n can be found on the next page.

Dimensions of geared motors

Type	EZ3			EZ4			EZ5			EZ7			EZ8		
	a	m	n	a	m	n	a	m	n	a	m	n	a	m	n
K102	□72	124	36.0	□98	124	36.0	□115	128	36.0	□145	130	36.0	–	–	–
K513	–	–	–	–	–	–	∅160	172	15.0	□145	174	15.0	□190	177	15.0
K514	–	–	–	–	–	–	∅160	215	15.0	–	–	–	–	–	–
K613	–	–	–	–	–	–	∅160	191	18.0	∅200	193	18.0	□190	196	18.0
K614	–	–	–	–	–	–	∅160	234	18.0	–	–	–	–	–	–
K713	–	–	–	–	–	–	–	–	–	∅200	221	20.0	□190	224	20.0
K714	–	–	–	–	–	–	∅160	263	20.0	∅200	283	20.0	–	–	–
K813	–	–	–	–	–	–	–	–	–	∅200	247	24.0	∅250	249	24.0
K814	–	–	–	–	–	–	–	–	–	∅200	308	24.0	∅250	320	5.0
K913	–	–	–	–	–	–	–	–	–	–	–	–	∅250	294	25.0
K914	–	–	–	–	–	–	–	–	–	∅200	353	25.0	∅250	365	25.0
K1014	–	–	–	–	–	–	–	–	–	–	–	–	∅250	450	28.0

16.3.13 A shaft design (solid shaft), G housing design (pitch circle diameter)

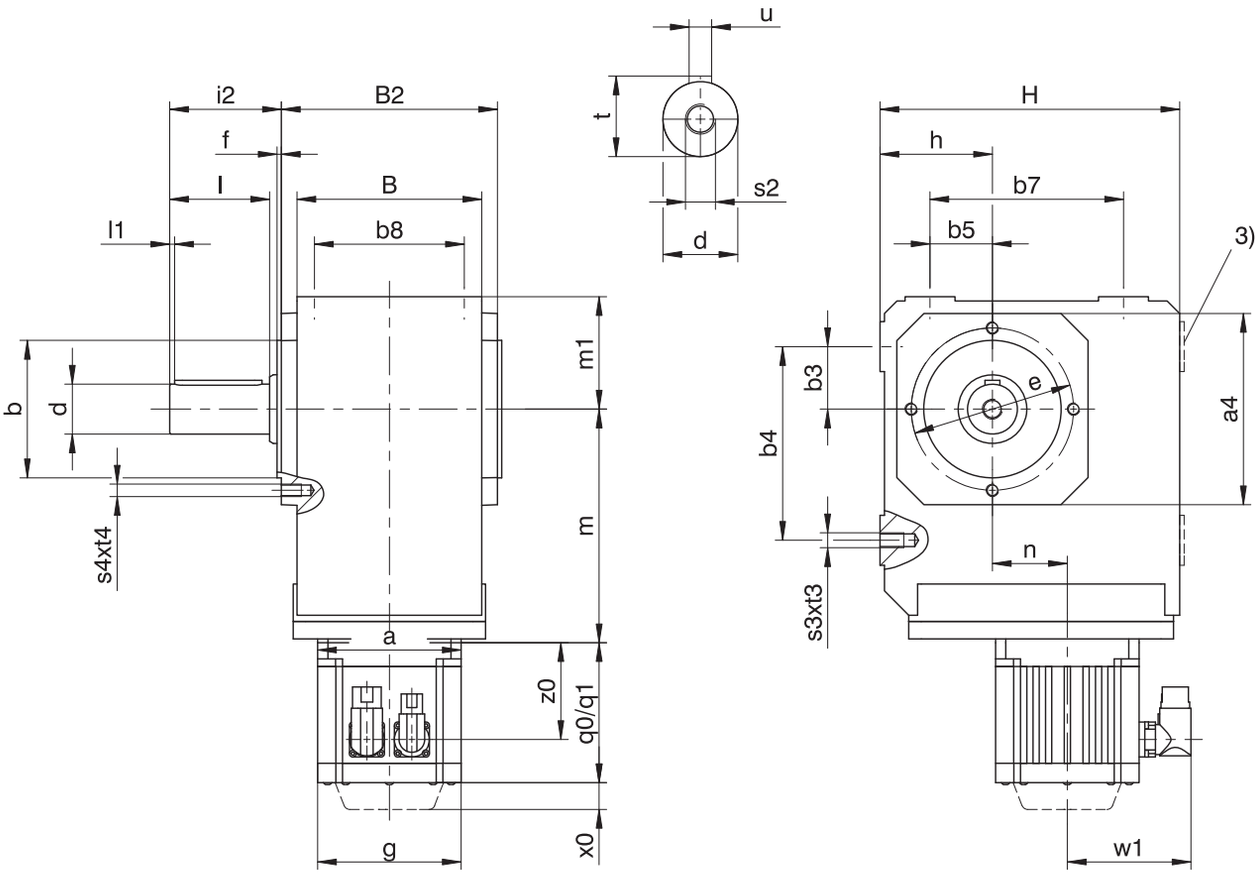

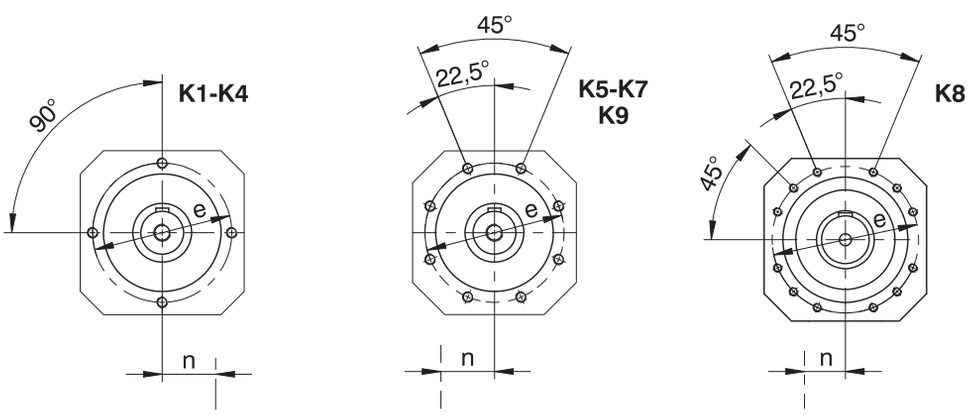

q0	Applies to motors without brake.	q1	Applies to motors with brake.
x0	Applies to encoders using an optical measuring method.	w1	Different for the One Cable Solution (OCS), see the chapter [▸ 17.4]
3)	Only for K1 (other sizes on request)	–	K1 – K4: Solid shaft without feather key available, on request starting at K5.
–	K1 – K9: Solid shaft on both sides available.		

Dimensions of gear units

Type	□a4	Øb	b3	b4	b5	b7	b8	B	B2	Ød	Øe	f	h	H	i2	l	l1	m1	s2	s3	s4	t	t3	t4	u
K1	105	75_{j6}	30	90	30	90	70	90	106	25_{k6}	90	3.0	60	160	62.0	50	4	60	M10	M8	M8	28.0	13	13	A8×7×40
K2	116	82_{j6}	35	115	35	115	90	115	134	30_{k6}	100	3.0	65	190	68.0	60	4	65	M10	M10	M8	33.0	16	13	A8×7×50
K3	132	95_{j6}	40	130	40	130	105	130	146	30_{k6}	115	3.0	75	213	69.0	60	4	75	M10	M10	M8	33.0	16	13	A8×7×50
K4	152	110_{j6}	50	155	50	155	120	148	173	40_{k6}	130	3.5	90	240	89.5	80	4	90	M16	M12	M10	43.0	19	16	A12×8×70
K5	145	110_{j6}	40	140	100	140	125	160	185	45_{k6}	130	3.5	160	260	129.5	90	4	100	M16	M16	M10	48.5	26	16	A14×9×80
K6	180	140_{j6}	50	160	110	160	130	168	200	50_{k6}	165	3.5	190	310	136.0	100	4	120	M16	M16	M10	53.5	26	16	A14×9×90
K7	195	155_{j6}	55	180	125	180	145	190	226	60_{m6}	185	3.5	212	342	164.0	120	4	125	M20	M20	M12	64.0	33	19	A18×11×110
K8	226	185_{j6}	75	240	165	240	185	235	282	70_{m6}	215	4.0	265	410	185.0	140	5	145	M20	M24	M12	74.5	38	19	A20×12×125
K9	280	230_{j6}	95	280	185	280	225	285	330	90_{m6}	265	5.0	315	495	220.0	170	8	180	M24	M30	M16	95.0	48	26	A25×14×140

Dimensions of motors

Type	□g	q0	q1	w1	x0	z0
EZ301U	72	114.0	154.0	55.5	21	78.5
EZ302U	72	136.0	176.0	55.5	21	100.5
EZ303U	72	158.0	198.0	55.5	21	122.5
EZ401U	98	118.5	167.0	91.0	22	76.5
EZ402U	98	143.5	192.0	91.0	22	101.5
EZ404U	98	193.5	242.0	91.0	22	151.5
EZ501U	115	112.0	166.5	100.0	22	77.5
EZ502U	115	137.0	191.5	100.0	22	102.5
EZ503U	115	162.0	216.5	100.0	22	127.5
EZ505U	115	212.0	266.5	100.0	22	177.5
EZ701U	145	125.0	184.0	115.0	22	87.0
EZ702U	145	150.0	209.0	115.0	22	112.0
EZ703U	145	175.0	234.0	115.0	22	137.0
EZ705U	145	230.0	289.0	134.0	22	188.0
EZ802U	190	232.5	309.5	156.5	22	178.5
EZ803U	190	273.5	350.5	156.5	22	219.5
EZ805U	190	355.5	432.5	156.5	22	301.5

Dimensions of geared motors

Type	EZ3			EZ4			EZ5			EZ7			EZ8		
	a	m	n	a	m	n	a	m	n	a	m	n	a	m	n
K102	□72	124	36.0	□98	124	36.0	□115	128	36.0	□145	130	36.0	–	–	–
K202	□72	143	46.0	□98	143	46.0	□115	147	46.0	□145	149	46.0	–	–	–
K203	∅140	180	46.0	∅140	180	46.0	–	–	–	–	–	–	–	–	–
K302	∅140	163	52.5	∅140	163	52.5	□115	167	52.5	□145	169	52.5	–	–	–
K303	∅140	200	52.5	∅140	200	52.5	∅160	210	16.0	–	–	–	–	–	–
K402	–	–	–	–	–	–	∅160	187	60.0	□145	189	60.0	□190	192	60.0
K403	∅140	220	60.0	∅140	220	60.0	∅160	230	23.0	–	–	–	–	–	–
K513	–	–	–	–	–	–	∅160	172	15.0	□145	174	15.0	□190	177	15.0
K514	–	–	–	–	–	–	∅160	215	15.0	–	–	–	–	–	–
K613	–	–	–	–	–	–	∅160	191	18.0	∅200	193	18.0	□190	196	18.0
K614	–	–	–	–	–	–	∅160	234	18.0	–	–	–	–	–	–
K713	–	–	–	–	–	–	–	–	–	∅200	221	20.0	□190	224	20.0
K714	–	–	–	–	–	–	∅160	263	20.0	∅200	283	20.0	–	–	–
K813	–	–	–	–	–	–	–	–	–	∅200	247	24.0	∅250	249	24.0
K814	–	–	–	–	–	–	–	–	–	∅200	308	24.0	∅250	320	5.0
K913	–	–	–	–	–	–	–	–	–	–	–	–	∅250	294	25.0
K914	–	–	–	–	–	–	–	–	–	∅200	353	25.0	∅250	365	25.0

16.3.14 V shaft design (solid shaft), NG housing design (base + pitch circle diameter)

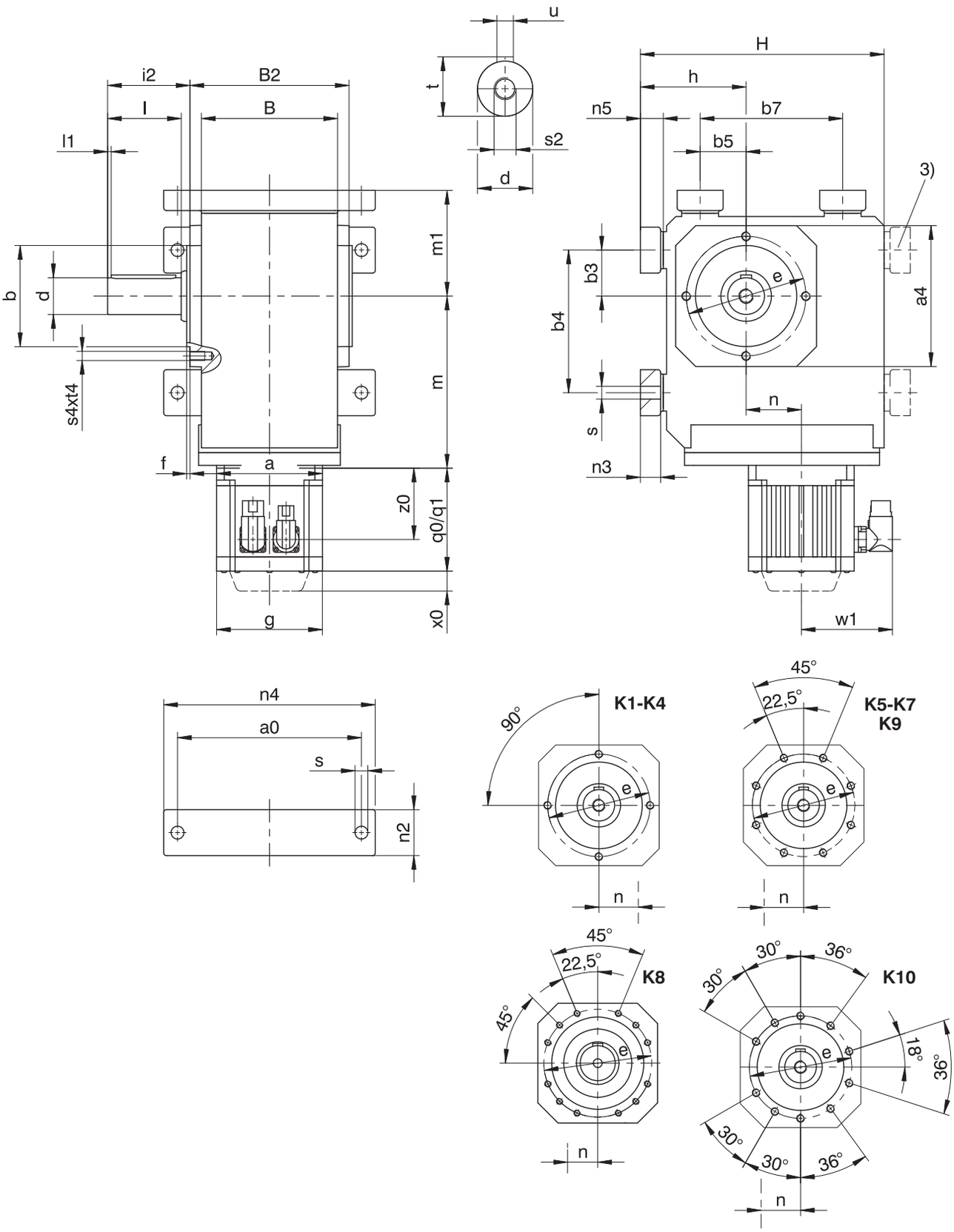

q0	Applies to motors without brake.	q1	Applies to motors with brake.
x0	Applies to encoders using an optical measuring method.	w1	Different for the One Cable Solution (OCS), see the chapter [▶ 17.4]
3)	Only for K1 (other sizes on request)	–	K1 – K4: Solid shaft without feather key available, on request starting at K5.
–	K1 – K10: Solid shaft on both sides available.		

Dimensions of gear units

Type	a0	□a4	Øb	b3	b4	b5	b7	B	B2	Ød	Øe	f	h	H	i2	l	l1	m1	n2	n3	n4	n5	Øs	s2	s4	t	t4	u
K1	115	105	75_{j6}	30	90	30	90	90	106	25_{k6}	90	3.0	75	175	62.0	50	4	75	30	13	140	15	9.0	M10	M8	28.0	13	A8×7×40
K2	155	116	82_{j6}	35	115	35	115	115	134	30_{k6}	100	3.0	88	213	68.0	60	4	88	40	20	185	23	11.0	M10	M8	33.0	13	A8×7×50
K3	170	132	95_{j6}	40	130	40	130	130	146	30_{k6}	115	3.0	98	236	69.0	60	4	98	45	20	200	23	11.0	M10	M8	33.0	13	A8×7×50
K4	200	152	110_{j6}	50	155	50	155	148	173	40_{k6}	130	3.5	115	265	89.5	80	4	115	50	22	230	25	14.0	M16	M10	43.0	16	A12×8×70
K5	200	145	110_{j6}	40	140	100	140	160	185	45_{k6}	130	3.5	190	290	129.5	90	4	130	60	27	240	30	18.0	M16	M10	48.5	16	A14×9×80
K6	210	180	140_{j6}	50	160	110	160	168	200	50_{k6}	165	3.5	220	340	136.0	100	4	150	65	27	250	30	18.5	M16	M10	53.5	16	A14×9×90
K7	241	195	155_{j6}	55	180	125	180	190	226	60_{m6}	185	3.5	250	380	164.0	120	4	163	70	35	290	38	23.0	M20	M12	64.0	19	A18×11×110
K8	300	226	185_{j6}	75	240	165	240	235	282	70_{m6}	215	4.0	310	455	185.0	140	5	190	85	41	360	45	27.0	M20	M12	74.5	19	A20×12×125
K9	360	280	230_{j6}	95	280	185	280	285	330	90_{m6}	265	5.0	365	545	220.0	170	8	230	95	46	430	50	31.0	M24	M16	95.0	26	A25×14×140
K10	330	340	250_{h6}	115	350	265	420	400	356	110_{m6}	300	20.0	420	636	240.0	210	15	270	120	–	400	45	39.0	M24	M20	116.0	33	A28×16×180

Dimensions of motors

Type	□g	q0	q1	w1	x0	z0
EZ301U	72	114.0	154.0	55.5	21	78.5
EZ302U	72	136.0	176.0	55.5	21	100.5
EZ303U	72	158.0	198.0	55.5	21	122.5
EZ401U	98	118.5	167.0	91.0	22	76.5
EZ402U	98	143.5	192.0	91.0	22	101.5
EZ404U	98	193.5	242.0	91.0	22	151.5
EZ501U	115	112.0	166.5	100.0	22	77.5
EZ502U	115	137.0	191.5	100.0	22	102.5
EZ503U	115	162.0	216.5	100.0	22	127.5
EZ505U	115	212.0	266.5	100.0	22	177.5
EZ701U	145	125.0	184.0	115.0	22	87.0
EZ702U	145	150.0	209.0	115.0	22	112.0
EZ703U	145	175.0	234.0	115.0	22	137.0
EZ705U	145	230.0	289.0	134.0	22	188.0
EZ802U	190	232.5	309.5	156.5	22	178.5
EZ803U	190	273.5	350.5	156.5	22	219.5
EZ805U	190	355.5	432.5	156.5	22	301.5

Dimensions of geared motors

Type	EZ3			EZ4			EZ5			EZ7			EZ8		
	a	m	n	a	m	n	a	m	n	a	m	n	a	m	n
K102	□72	124	36.0	□98	124	36.0	□115	128	36.0	□145	130	36.0	–	–	–
K202	□72	143	46.0	□98	143	46.0	□115	147	46.0	□145	149	46.0	–	–	–
K203	∅140	180	46.0	∅140	180	46.0	–	–	–	–	–	–	–	–	–
K302	∅140	163	52.5	∅140	163	52.5	□115	167	52.5	□145	169	52.5	–	–	–
K303	∅140	200	52.5	∅140	200	52.5	∅160	210	16.0	–	–	–	–	–	–
K402	–	–	–	–	–	–	∅160	187	60.0	□145	189	60.0	□190	192	60.0
K403	∅140	220	60.0	∅140	220	60.0	∅160	230	23.0	–	–	–	–	–	–
K513	–	–	–	–	–	–	∅160	172	15.0	□145	174	15.0	□190	177	15.0
K514	–	–	–	–	–	–	∅160	215	15.0	–	–	–	–	–	–
K613	–	–	–	–	–	–	∅160	191	18.0	∅200	193	18.0	□190	196	18.0
K614	–	–	–	–	–	–	∅160	234	18.0	–	–	–	–	–	–
K713	–	–	–	–	–	–	–	–	–	∅200	221	20.0	□190	224	20.0
K714	–	–	–	–	–	–	∅160	263	20.0	∅200	283	20.0	–	–	–
K813	–	–	–	–	–	–	–	–	–	∅200	247	24.0	∅250	249	24.0
K814	–	–	–	–	–	–	–	–	–	∅200	308	24.0	∅250	320	5.0
K913	–	–	–	–	–	–	–	–	–	–	–	–	∅250	294	25.0
K914	–	–	–	–	–	–	–	–	–	∅200	353	25.0	∅250	365	25.0
K1014	–	–	–	–	–	–	–	–	–	–	–	–	∅250	450	28.0

16.3.15 V shaft design (solid shaft), F housing design (round flange)

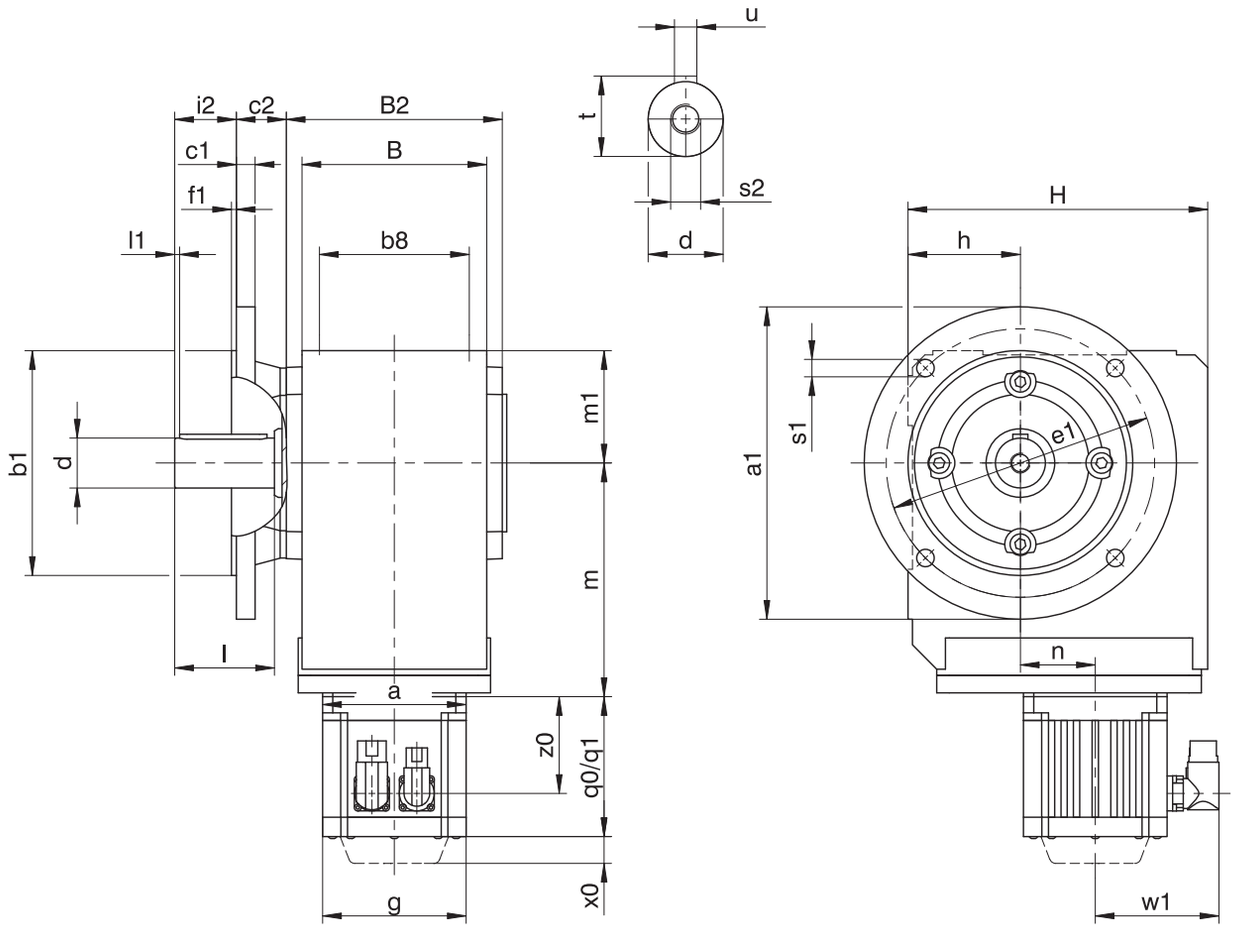

K1-K4 K5-K8 K9

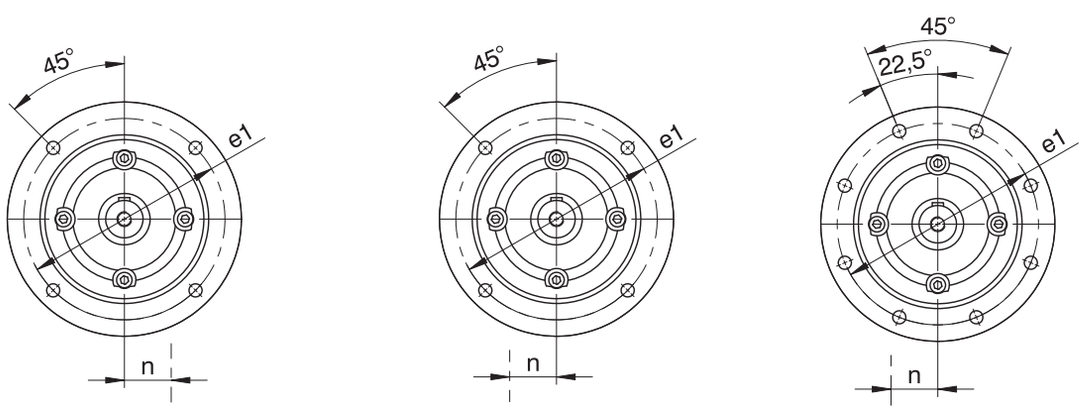

q0	Applies to motors without brake.	q1	Applies to motors with brake.
x0	Applies to encoders using an optical measuring method.	w1	Different for the One Cable Solution (OCS), see the chapter [▸ 17.4]
–	K1 – K4: Solid shaft without feather key available, on request starting at K5.	–	K1 – K9: Solid shaft on both sides available.

Dimensions of gear units

Type	Øa1	Øb1	b8	B	B2	c1	c2	Ød	Øe1	f1	h	H	i2	l	l1	m1	Øs1	s2	t	u
K1	160	110_{j6}	70	90	106	10	32.0	25_{k6}	130	3.5	60	160	30.0	50	4	60	9	M10	28.0	A8×7×40
K2	200	130_{j6}	90	115	134	12	32.0	30_{k6}	165	3.5	65	190	36.0	60	4	65	11	M10	33.0	A8×7×50
K3	200	130_{j6}	105	130	146	14	38.0	30_{k6}	165	3.5	75	213	31.0	60	4	75	11	M10	33.0	A8×7×50
K4	250	180_{j6}	120	148	173	15	40.0	40_{k6}	215	4.0	90	240	49.5	80	4	90	14	M16	43.0	A12×8×70
K5	250	180_{j6}	125	160	185	15	39.5	45_{k6}	215	4.0	160	260	90.0	90	4	100	14	M16	48.5	A14×9×80
K6	300	230_{j6}	130	168	200	17	36.0	50_{k6}	265	4.0	190	310	100.0	100	4	120	14	M16	53.5	A14×9×90
K7	350	250_{h6}	145	190	226	18	44.0	60_{m6}	300	5.0	212	342	120.0	120	4	125	18	M20	64.0	A18×11×110
K8	400	300_{h6}	185	235	282	20	45.0	70_{m6}	350	5.0	265	410	140.0	140	5	145	18	M20	74.5	A20×12×125
K9	450	350_{h6}	225	285	330	23	50.0	90_{m6}	400	5.0	315	495	170.0	170	8	180	18	M24	95.0	A25×14×140

Dimensions of additional round flanges

Type	Øa1	Øb1	c1	Øe1	f1	Øs1
K1	140	95_{j6}	10	115	3.0	9
K2	160	110_{j6}	12	130	3.5	9
K3	160	110_{j6}	14	130	3.5	9
K3	250	180_{j6}	14	215	4.0	14
K8	350	250_{h6}	18	300	5.0	18
K8	450	350_{h6}	20	400	5.0	18

Dimensions of motors

Type	□g	q0	q1	w1	x0	z0
EZ301U	72	114.0	154.0	55.5	21	78.5
EZ302U	72	136.0	176.0	55.5	21	100.5
EZ303U	72	158.0	198.0	55.5	21	122.5
EZ401U	98	118.5	167.0	91.0	22	76.5
EZ402U	98	143.5	192.0	91.0	22	101.5
EZ404U	98	193.5	242.0	91.0	22	151.5
EZ501U	115	112.0	166.5	100.0	22	77.5
EZ502U	115	137.0	191.5	100.0	22	102.5
EZ503U	115	162.0	216.5	100.0	22	127.5
EZ505U	115	212.0	266.5	100.0	22	177.5
EZ701U	145	125.0	184.0	115.0	22	87.0
EZ702U	145	150.0	209.0	115.0	22	112.0
EZ703U	145	175.0	234.0	115.0	22	137.0
EZ705U	145	230.0	289.0	134.0	22	188.0
EZ802U	190	232.5	309.5	156.5	22	178.5
EZ803U	190	273.5	350.5	156.5	22	219.5
EZ805U	190	355.5	432.5	156.5	22	301.5

Dimensions of geared motors

Type	EZ3			EZ4			EZ5			EZ7			EZ8		
	a	m	n	a	m	n	a	m	n	a	m	n	a	m	n
K102	□72	124	36.0	□98	124	36.0	□115	128	36.0	□145	130	36.0	–	–	–
K202	□72	143	46.0	□98	143	46.0	□115	147	46.0	□145	149	46.0	–	–	–
K203	∅140	180	46.0	∅140	180	46.0	–	–	–	–	–	–	–	–	–
K302	∅140	163	52.5	∅140	163	52.5	□115	167	52.5	□145	169	52.5	–	–	–
K303	∅140	200	52.5	∅140	200	52.5	∅160	210	16.0	–	–	–	–	–	–
K402	–	–	–	–	–	–	∅160	187	60.0	□145	189	60.0	□190	192	60.0
K403	∅140	220	60.0	∅140	220	60.0	∅160	230	23.0	–	–	–	–	–	–
K513	–	–	–	–	–	–	∅160	172	15.0	□145	174	15.0	□190	177	15.0
K514	–	–	–	–	–	–	∅160	215	15.0	–	–	–	–	–	–
K613	–	–	–	–	–	–	∅160	191	18.0	∅200	193	18.0	□190	196	18.0
K614	–	–	–	–	–	–	∅160	234	18.0	–	–	–	–	–	–
K713	–	–	–	–	–	–	–	–	–	∅200	221	20.0	□190	224	20.0
K714	–	–	–	–	–	–	∅160	263	20.0	∅200	283	20.0	–	–	–
K813	–	–	–	–	–	–	–	–	–	∅200	247	24.0	∅250	249	24.0
K814	–	–	–	–	–	–	–	–	–	∅200	308	24.0	∅250	320	5.0
K913	–	–	–	–	–	–	–	–	–	–	–	–	∅250	294	25.0
K914	–	–	–	–	–	–	–	–	–	∅200	353	25.0	∅250	365	25.0

16.3.16 V shaft design (solid shaft), NF housing design (base + round flange)

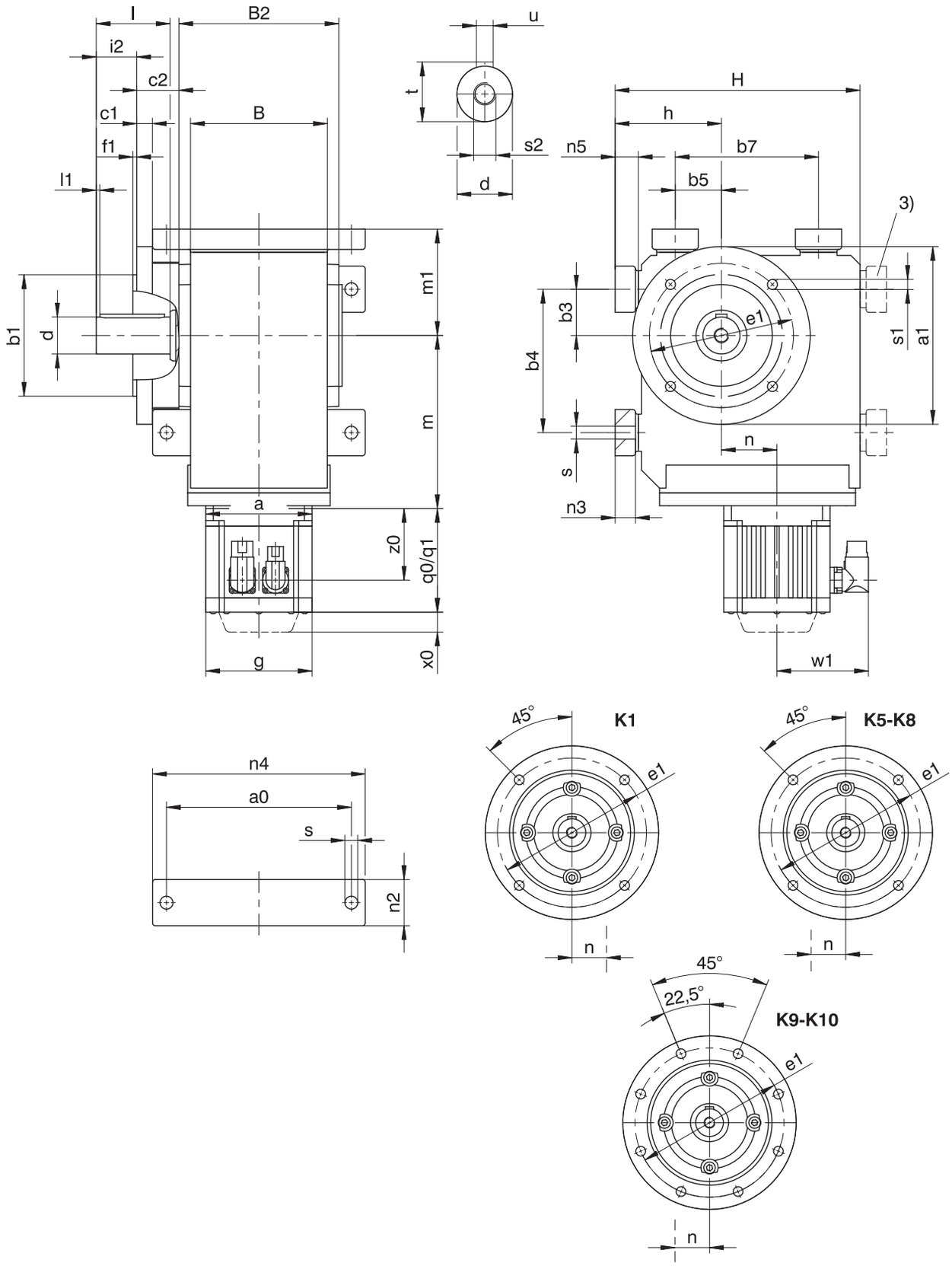

q0	Applies to motors without brake.	q1	Applies to motors with brake.
x0	Applies to encoders using an optical measuring method.	w1	Different for the One Cable Solution (OCS), see the chapter [▸ 17.4]
3)	Only for K1 (other sizes on request)	–	K1 – K4: Solid shaft without feather key available, on request starting at K5.
–	K1 – K10: Solid shaft on both sides available.		

Dimensions of gear units

Type	a0	Øa1	Øb1	b3	b4	b5	b7	B	B2	c1	c2	Ød	Øe1	f1	h	H	i2	l	l1	m1	n2	n3	n4	n5	Øs	Øs1	s2	t	u
K1	115	160	110_{j6}	30	90	30	90	90	106	10	32.0	25_{k6}	130	3.5	75	175	30.0	50	4	75	30	13	140	15	9.0	9	M10	28.0	A8×7×40
K5	200	250	180_{j6}	40	140	100	140	160	185	15	39.5	45_{k6}	215	4.0	190	290	90.0	90	4	130	60	27	240	30	18.0	14	M16	48.5	A14×9×80
K6	210	300	230_{j6}	50	160	110	160	168	200	17	36.0	50_{k6}	265	4.0	220	340	100.0	100	4	150	65	27	250	30	18.5	14	M16	53.5	A14×9×90
K7	241	350	250_{h6}	55	180	125	180	190	226	18	44.0	60_{m6}	300	5.0	250	380	120.0	120	4	163	70	35	290	38	23.0	18	M20	64.0	A18×11×110
K8	300	400	300_{h6}	75	240	165	240	235	282	20	45.0	70_{m6}	350	5.0	310	455	140.0	140	5	190	85	41	360	45	27.0	18	M20	74.5	A20×12×125
K9	360	450	350_{h6}	95	280	185	280	285	330	23	50.0	90_{m6}	400	5.0	365	545	170.0	170	8	230	95	46	430	50	31.0	18	M24	95.0	A25×14×140
K10	330	550	450_{h6}	115	350	265	420	400	356	25	78.0	110_{m6}	500	5.0	420	636	210.0	210	15	270	120	–	400	45	39.0	18	M24	116.0	A28×16×180

Dimensions of additional round flanges

Type	Øa1	Øb1	c1	Øe1	f1	Øs1
K1	140	95_{j6}	10	115	3.0	9
K8	350	250_{h6}	18	300	5.0	18
K8	450	350_{h6}	20	400	5.0	18

Dimensions of motors

Type	□g	q0	q1	w1	x0	z0
EZ301U	72	114.0	154.0	55.5	21	78.5
EZ302U	72	136.0	176.0	55.5	21	100.5
EZ303U	72	158.0	198.0	55.5	21	122.5
EZ401U	98	118.5	167.0	91.0	22	76.5
EZ402U	98	143.5	192.0	91.0	22	101.5
EZ404U	98	193.5	242.0	91.0	22	151.5
EZ501U	115	112.0	166.5	100.0	22	77.5
EZ502U	115	137.0	191.5	100.0	22	102.5
EZ503U	115	162.0	216.5	100.0	22	127.5
EZ505U	115	212.0	266.5	100.0	22	177.5
EZ701U	145	125.0	184.0	115.0	22	87.0
EZ702U	145	150.0	209.0	115.0	22	112.0
EZ703U	145	175.0	234.0	115.0	22	137.0
EZ705U	145	230.0	289.0	134.0	22	188.0
EZ802U	190	232.5	309.5	156.5	22	178.5
EZ803U	190	273.5	350.5	156.5	22	219.5
EZ805U	190	355.5	432.5	156.5	22	301.5

Dimensions of geared motors

Type	EZ3			EZ4			EZ5			EZ7			EZ8		
	a	m	n	a	m	n	a	m	n	a	m	n	a	m	n
K102	□72	124	36.0	□98	124	36.0	□115	128	36.0	□145	130	36.0	–	–	–
K513	–	–	–	–	–	–	∅160	172	15.0	□145	174	15.0	□190	177	15.0
K514	–	–	–	–	–	–	∅160	215	15.0	–	–	–	–	–	–
K613	–	–	–	–	–	–	∅160	191	18.0	∅200	193	18.0	□190	196	18.0
K614	–	–	–	–	–	–	∅160	234	18.0	–	–	–	–	–	–
K713	–	–	–	–	–	–	–	–	–	∅200	221	20.0	□190	224	20.0
K714	–	–	–	–	–	–	∅160	263	20.0	∅200	283	20.0	–	–	–
K813	–	–	–	–	–	–	–	–	–	∅200	247	24.0	∅250	249	24.0
K814	–	–	–	–	–	–	–	–	–	∅200	308	24.0	∅250	320	5.0
K913	–	–	–	–	–	–	–	–	–	–	–	–	∅250	294	25.0
K914	–	–	–	–	–	–	–	–	–	∅200	353	25.0	∅250	365	25.0
K1014	–	–	–	–	–	–	–	–	–	–	–	–	∅250	450	28.0

16.3.17 Oil expansion tank

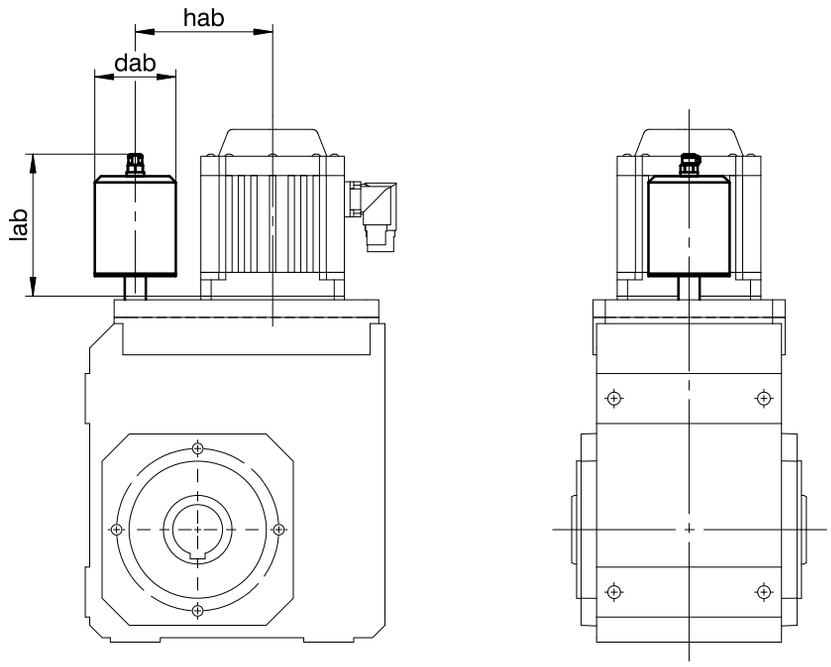

Dimensions

Type	EZ5			EZ7			EZ8		
	dab	hab	lab	dab	hab	lab	dab	hab	lab
K513	65	122.0	113.5	65	122.0	113.5	65	170.0	163.5
K613	65	148.5	116.5	65	148.5	116.5	65	150.5	111.5
K713	–	–	–	65	170.0	114.5	65	170.0	112.0
K813	–	–	–	73	205.0	129.5	73	205.0	129.5
K913	–	–	–	–	–	–	73	255.0	129.5

More information can be found in Chapter [▸ 16.6.4]

16.4 Type designation

This chapter shows you an explanation of the type designation with the associated options.

Additional ordering information not included in the type designation can be found at the end of the chapter.

Example code

K	4	0	2	A	G	0560	EZ501U

Explanation

Code	Designation	Design
K	Type	Helical bevel gear unit
4	Size	4 (example)
0	Generation	Generation 0
1		Generation 1
2	Stages	Two-stage
3		Three-stage
4		Four-stage
A	Shaft	Hollow shaft with keyway
S		Hollow shaft with shrink ring
V		Solid shaft
G	Housing	Pitch circle diameter
F		Round flange
NG		Foot + pitch circle diameter
NF		Foot + round flange
GD		Pitch circle diameter + torque arm bracket
NGD		Foot + pitch circle diameter + torque arm bracket
0560	Transmission ratio (i x 10 rounded)	i = 55.71 (example)
EZ501U	Motor	EZ synchronous servo motor

To complete the type designation, also specify the following in your order:

- A detailed type designation of the motor, see the chapter [▸ 17]
- Mounting position, see the chapter [▸ 16.5.5]
- Attachment of solid shaft: gear unit side 3 or 4; solid shaft on both sides
- Attachment of hollow shaft with keyway: entry side 3 or 4
- Attachment of hollow shaft with shrink ring: shrink ring on gear unit side 3 or 4
- Attachment of foot plates: gear unit side 1 or 5 (for K1, also on gear side 2)
- Attachment of flange: gear unit side 3 or 4
- Pitch circle diameter: gear unit side 3 or 4
- Attachment of torque arm bracket: torque arm bracket on gear unit side 1 or 5 (for K1, also on gear unit side 2), eye on gear unit side 3 or 4
- Position of the plug connectors, see the chapter [▸ 16.5.7]
- Oil expansion tank (option, recommended for gear units in mounting position EL5), see the chapter [▸ 16.6.4]
- Backlash: Standard/class II/class I. Backlash class II and class I for an additional charge.

For an explanation of the gear unit sides, see the chapter [▸ 16.5.5].

16.4.1 Nameplate

An example gear unit nameplate is explained in the figure below.

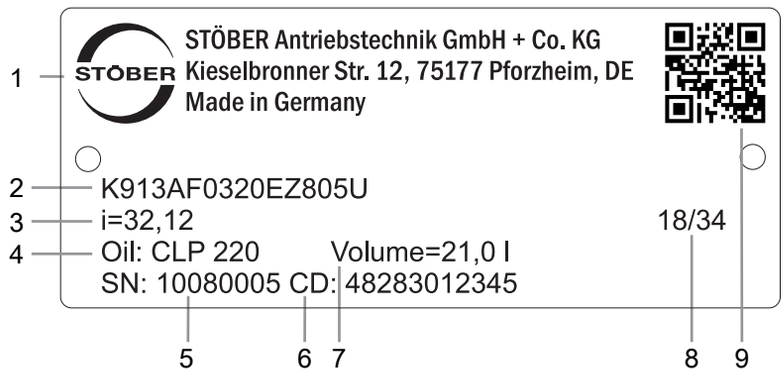

Code	Designation
1	Name of manufacturer
2	Type designation
3	Gear ratio of the gear unit
4	Lubricant specification
5	Serial number of the gear unit
6	Customer-specific data
7	Lubricant fill volume
8	Date of manufacture (year/calendar week)
9	QR code (link to product information)

16.4.1.1 Supporting documents

You can view or download supporting documents for the product by reading off the serial number on the nameplate of the product and entering it at the following address online:
https://id.stober.com

Alternatively, you can use a suitable mobile device to scan in the QR code on the nameplate of the product in order to be linked to the supporting documents.

16.5 Product description

16.5.1 Input options

EZ synchronous servo motor

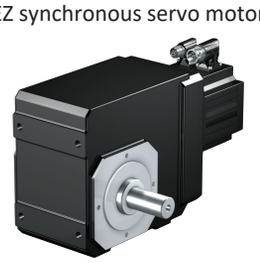

http://www.stoeber.de/en/KEZ

LM Lean motor

http://www.stoeber.de/en/KLM

Asynchronous motor

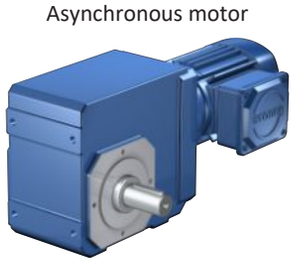

http://www.stoeber.de/en/KIE3D

16.5.2 Housing design

Pitch circle diameter G	Round flange F
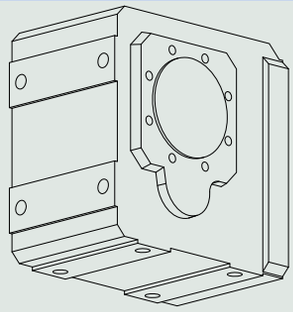	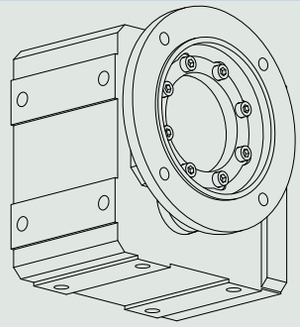

Foot + pitch circle diameter NG	Foot + round flange NF
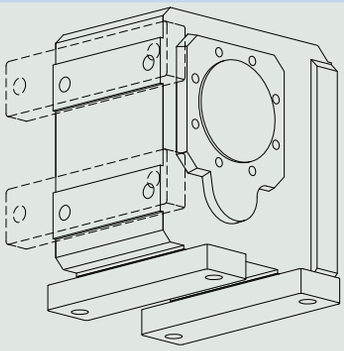	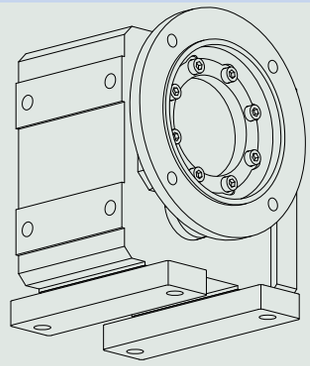

Pitch circle diameter + torque arm bracket GD	Foot + pitch circle diameter + torque arm bracket NGD
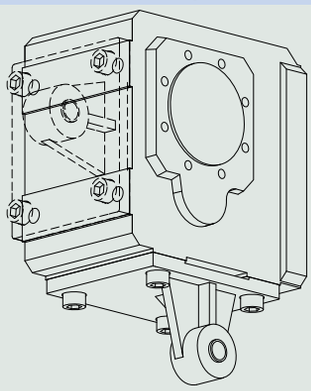	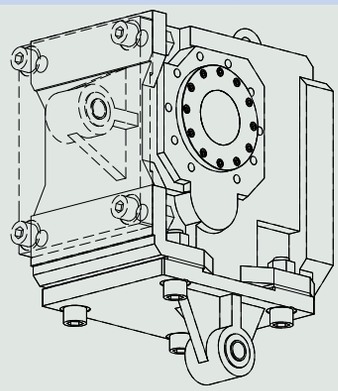

	G	F	NG	NF	GD	NGD
K1	✓	✓	✓	✓	✓	–
K2	✓	✓	✓	–	✓	–
K3	✓	✓	✓	–	✓	–
K4	✓	✓	✓	–	✓	–
K5	✓	✓	✓	✓	✓	–
K6	✓	✓	✓	✓	✓	–
K7	✓	✓	✓	✓	✓	–
K8	✓	✓	✓	✓	✓	–
K9	✓	✓	✓	✓	✓	–
K10	–	–	✓	✓	–	✓

16.5.3 Combinatorial shaft/housing design

	Housing design						
Shaft design	**Code**	**G**	**F**	**NG**	**NF**	**GD**	**NGD**
Hollow shaft with keyway	**A**	AG	AF	ANG	ANF	AGD	ANGD
Hollow shaft with shrink ring	**S**	SG	SF	SNG	SNF	SGD	SNGD
Solid shaft [1)]	**V**	VG	VF	VNG	VNF	–	–

[1)] Gear units in sizes K1 – K10 come with a solid shaft with feather key as standard. Gear units in sizes K1 – K4 can be ordered with the option of a solid shaft without feather key. Only upon request starting at size K5.

16.5.4 Installation conditions

Hollow shaft

The hollow shaft hole tolerance is ISO H7. The tolerance of the machine shaft must be ISO k6.

Take care to align the machine shaft with the gear unit hollow shaft when attaching the gear unit.

Maximum deviation ≤ 0.03 mm.

For simpler assembly and disassembly of the machine shaft, the hollow shafts are equipped with a spiral groove (as a grease deposit).

A hardened, threaded keeper plate is included in the scope of delivery. You also have the option to order the hollow shaft without a keeper plate.

Hollow shaft with shrink ring

The tolerance of the hollow shaft hole is ISO H7.

The machine shaft must be executed as follows:

Gear unit type	Tolerance
K1 to K6	ISO h9
K7 to K10	ISO h6

Select a material for the machine shaft with a permitted surface pressure of $p \geq 325\ N/mm^2$.

Possible materials:

- C45E +QT
- 42CrMo4

Fastening the gear units on the machine side using the pitch circle diameter

The specified torques and forces only apply when gear units are fastened on the machine side using screws of strength class 10.9. In addition, the gear housings must be adjusted at the pilot. The machine-side fit must be H7.

16.5.5 Mounting positions

The following table shows the standard mounting positions.

The numbers identify the gear unit sides. The mounting position is defined by the gear side facing downwards.

Mounting positions for gear unit sizes K1 – K4

EL1	EL2	EL3
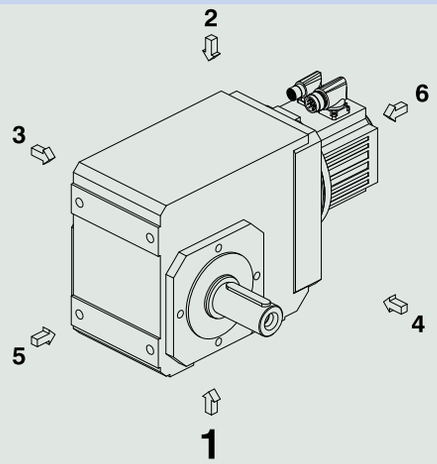	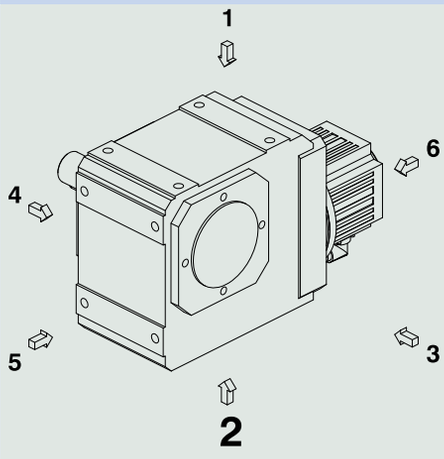	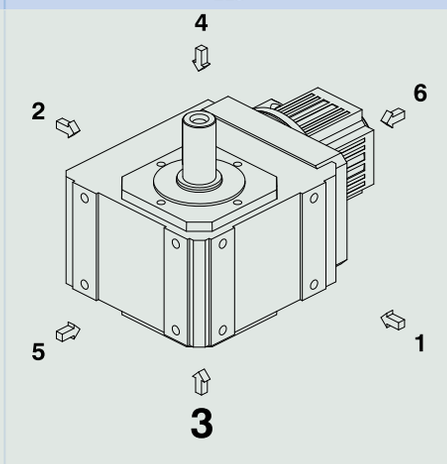
EL4	**EL5**	**EL6**
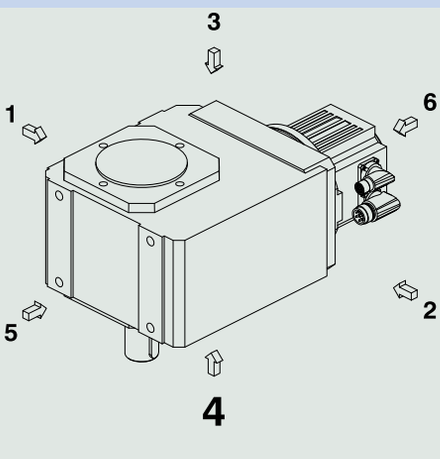	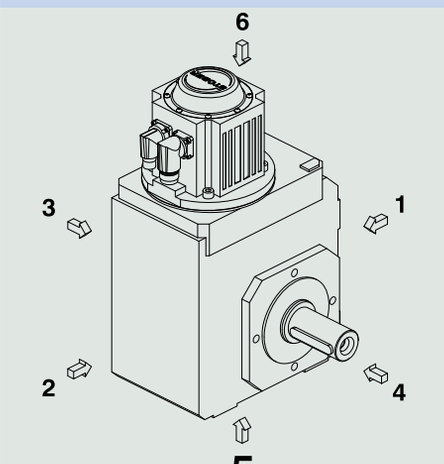	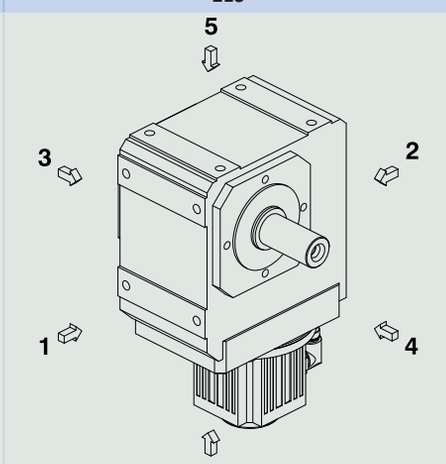

Mounting positions for gear unit sizes K5 – K10

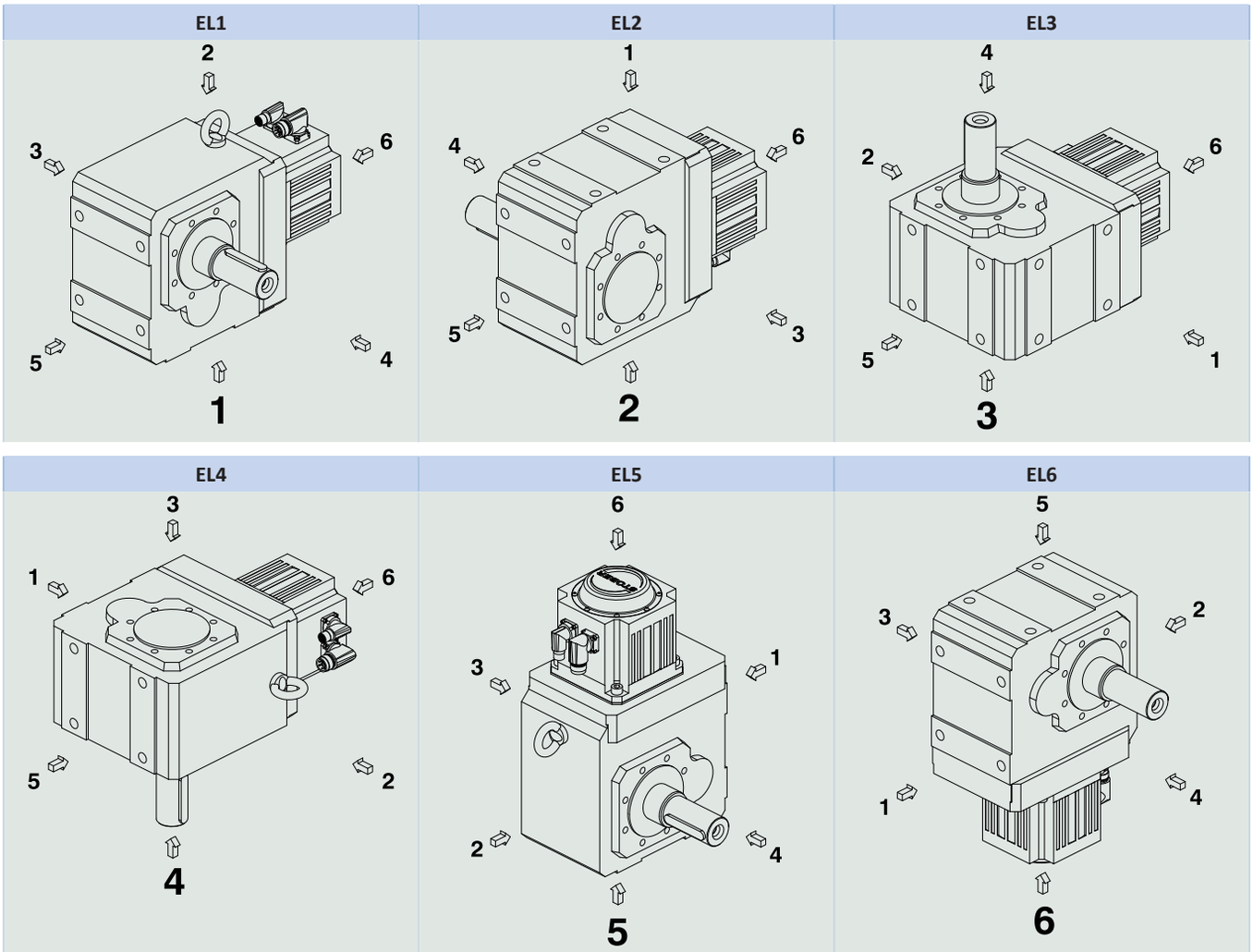

Since the lubricant filling volume of the gear unit depends on the mounting position, the mounting position must be specified when ordering.

16.5.6 Lubricants

STOBER fills the gear units with the amount and type of lubricant specified on the nameplate. The filling volume and the structure of the gear units depend on the mounting position.

Only install the gear units in the intended mounting position! Reposition the gear units only after consulting STOBER. Otherwise, STOBER assumes no liability for the gear units.

You will receive lubricants for use in the food industry upon request.

16.5.7 Position of the plug connectors

Mounting position EL1 Plug connector in 270° position (standard)	Mounting position EL4 Plug connector in 270° position (standard)
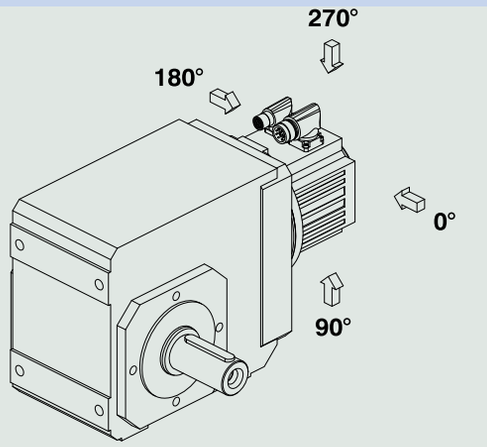	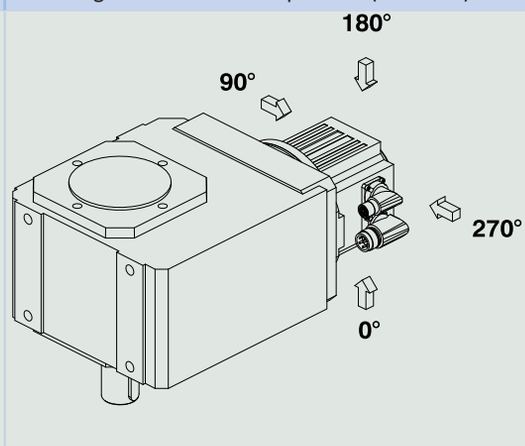

Indicate variations for your geared motor in the order.

Note that the plug connector position rotates along with the geared motor if the geared motor is in another mounting position.

16.5.8 Other product features

Feature	Value
Max. permitted gear unit temperature (on the surface of the gear unit)	≤ 80 °C
Paint	Black RAL 9005
Explosion-proof design in accordance with (ATEX) Directive 2014/34/EU (optional)	Not available
Efficiency:	
η_{get} two-stage	97%
η_{get} three-stage	96%
η_{get} four-stage	94%
Protection class:[1]	
Gear unit	IP65
Motor	IP56, optionally IP66

16.5.9 Maintenance

The instructions for maintenance can be found in the operating manual, ID 443027_en, at http://www.stoeber.de/en/downloads/. Enter the ID of the documentation in the Search... field.

Ventilation

Air release valves are fitted as a standard feature and independently of installation position for gear unit sizes K5 to K10.

For the position and dimensions of the air release valve, refer to the 3D model.

Download the 3D model at http://configurator.stoeber.de.

[1] Observe the protection class of all the components.

16.5.10 Direction of rotation

Solid shaft (V), solid shaft on both sides (V), hollow shaft with keyway (A)

Type	Output side 4	Output side 3
K102 – K402	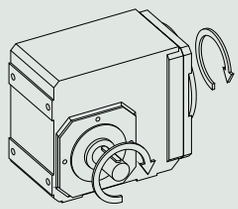	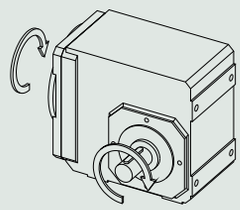
K203 – K403	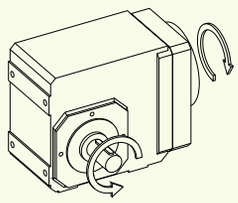	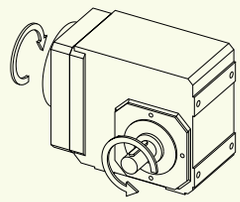
K513 – K1013	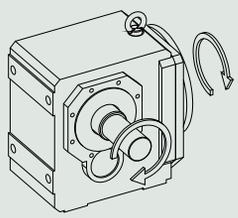	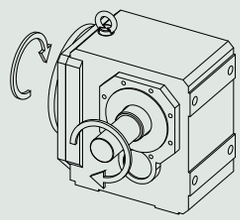
K514 – K1014	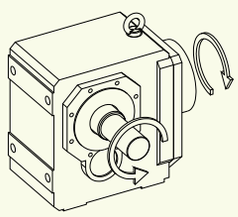	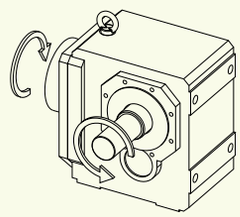

The specified directions of rotation also apply to gear units with hollow shaft (A) if the entry side of the machine shaft corresponds to the side of the solid shaft that is shown.

The direction of rotation for the shaft design of a solid shaft on both sides corresponds to the direction of rotation for output side 4.

The pictures show mounting position EL1.

Hollow shaft with shrink ring (S)

Type	Shrink ring side 4	Shrink ring side 3
K102 – K402	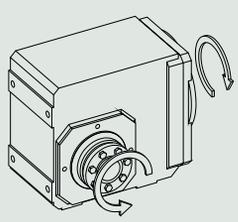	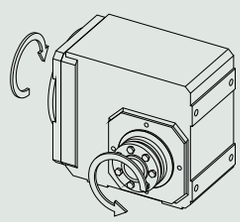
K203 – K403	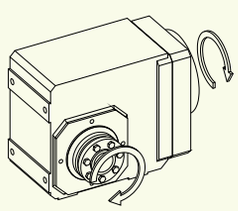	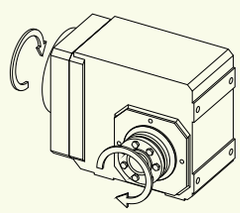

Type	Shrink ring side 4	Shrink ring side 3
K513 – K813	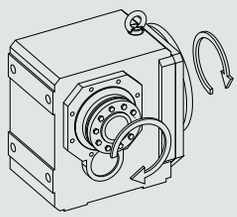	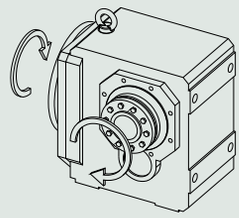
K514 – K814	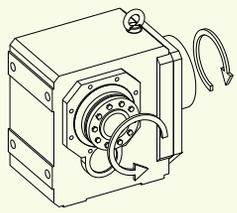	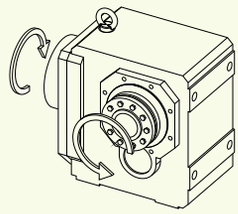
K913 – K1013	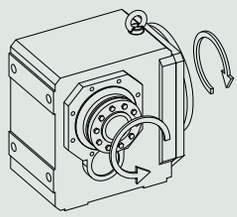	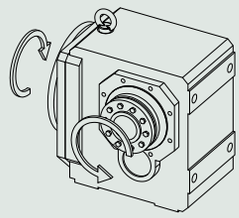
K914 – K1014	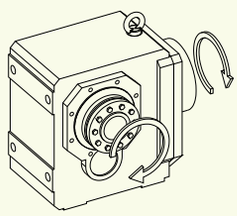	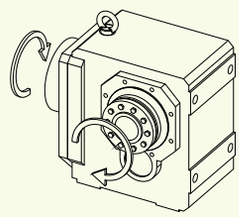

The pictures show mounting position EL1.

16.6 Project configuration

Project your drives using our SERVOsoft designing software. Download SERVOsoft for free at https://www.stoeber.de/en/ServoSoft.

Observe the limit conditions in this chapter to ensure a safe design for your drives.

An explanation of the formula symbols can be found in Chapter [▸ 23.1].

The formula symbols for values actually present in the application are marked with *.

16.6.1 Calculation of the operating point

Check the following conditions for operating points other than the nominal point M_{2N} specified in the selection tables.

For continuous operation in mounting positions EL1, EL2:

$$n_{1m*} \leq \frac{n_{1maxDBEL1,2}}{fB_T}$$

For continuous operation in mounting positions EL3, EL4, EL5, EL6:

$$n_{1m*} \leq \frac{n_{1maxDBEL3,4,5,6}}{fB_T}$$

For all mounting positions:

$$n_{1max*} \leq \frac{n_{1max\,ZB}}{fB_T}$$

$$M_{2eff*} \leq M_{2th}$$

$$M_{2acc*} \leq M_{2acc}$$

$$M_{2NOT*} \leq M_{2NOT}$$

$$M_{2eq*} \leq M_{2N} \cdot \frac{S}{fB_{op} \cdot fB_t}$$

Refer to the selection tables for the values for $n_{1maxDBEL1,2}$ and $n_{1maxDBEL3,4,5,6}$, n_{1maxZB}, M_{2acc}, M_{2NOT}, M_{2N} and S.

The values for fB_T, fB_{op} and fB_t can be found in the corresponding tables in this chapter.

Calculate the thermal limit torque M_{2th} for a duty cycle > 50%.

Example of cyclic operation

The following calculations are based on a representation of the power taken from the output based in accordance with the following example:

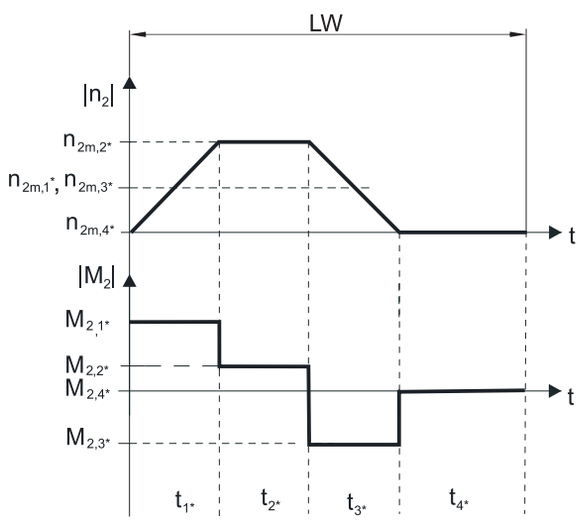

Calculation of the actual average input speed

$$n_{1m*} = n_{2m*} \cdot i$$

$$n_{2m*} = \frac{|n_{2m,1*}| \cdot t_{1*} + \ldots + |n_{2m,n*}| \cdot t_{n*}}{t_{1*} + \ldots + t_{n*}}$$

If $t_{1*} + \ldots + t_{3*} \geq 6$ min, calculate n_{2m*} without the rest phase t_{4*}.

The values for the ratio i can be found in the selection tables.

Calculation of the actual effective torque

$$M_{2eff*} = \sqrt{\frac{t_{1*} \cdot M_{2,1*}^{\;2} + \ldots + t_{n*} \cdot M_{2,n*}^{\;2}}{t_{1*} + \ldots + t_{n*}}}$$

Calculation of the actual equivalent torque

$$M_{2eq*} = \sqrt[3]{\frac{|n_{2m,1*}| \cdot t_{1*} \cdot |M_{2,1*}^{\;3}| + \ldots + |n_{2m,n*}| \cdot t_{n*} \cdot |M_{2,n*}^{\;3}|}{|n_{2m,1*}| \cdot t_{1*} + \ldots + |n_{2m,n*}| \cdot t_{n*}}}$$

Calculation of the thermal limit torque

Calculate the thermal limit torque M_{2th} for a duty cycle ED_{10} > 50% and the actual average input speed n_{1m*}. (At $K_{mot,th} \leq 0$ you must reduce the average input speed n_{1m*} accordingly or select another geared motor size.)

$$M_{2th} = M_{op} \cdot i \cdot K_{mot,th}$$

$$K_{mot,th} = 0{,}95 - \frac{a_{th}}{1000} \cdot athEL \cdot fB_T \cdot \left(\frac{n_{1m*}}{1000}\right)^2$$

The values for i and a_{th} can be found in the selection tables.

The values for a_{thEL} and fB_T can be found in the corresponding tables in this chapter.

The value for the torque of the motor at operating point M_{op} with the determined average input speed n_{1m*} can be found in the motor curve of Chapter [▶ 17.3]. Note the size, nominal speed n_N and cooling type of the motor. The figure below shows an example of reading the torque M_{op} of a motor with convection cooling at the operating point.

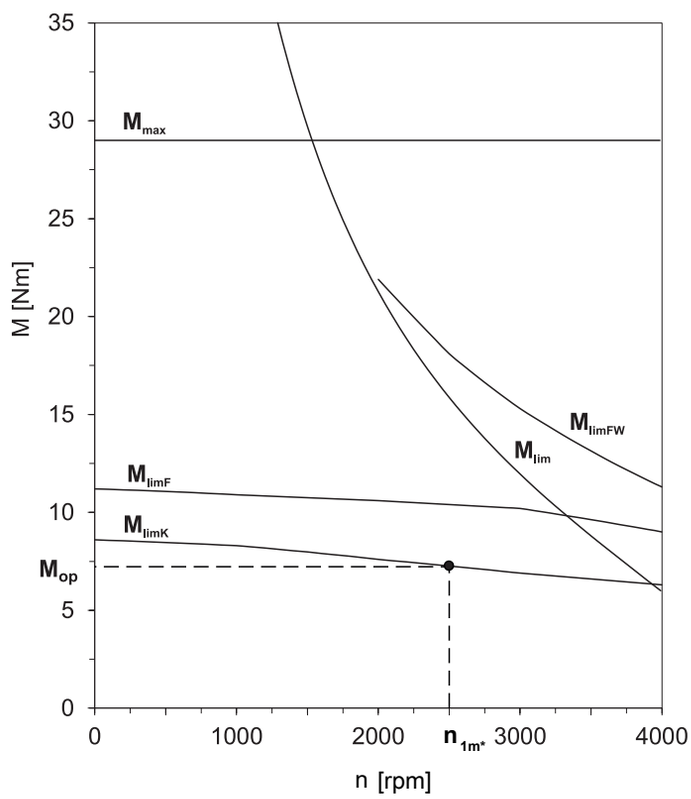

Operating factors

Parameter a_{thEL}

Mounting position	a_{thEL}
EL1, 2	1.0
EL3, 4, 5, 6	1.1

Operating mode	fB_{op}
Uniform continuous operation	1.00
Cyclic operation	1.25
Reversing load cyclic operation	1.40

Run time	fB_t
Daily runtime ≤ 8 h	1.00
Daily runtime ≤ 16 h	1.15
Daily runtime ≤ 24 h	1.20

Temperature		fB_T
Motor cooling	**Surrounding temperature**	
Motor with forced ventilation	≤ 20 °C	0.9
	≤ 30 °C	1.0
	≤ 40 °C	1.15
Motor with convection cooling	≤ 20 °C	1.0
	≤ 30 °C	1.1
	≤ 40 °C	1.25

Notes

- The maximum permitted gear unit temperature (see the "Other product features" chapter) must not be exceeded. Doing so may result in damage to the geared motor.
- For braking from full speed (for example when the power fails or when setting up the machine), note the permitted gear unit torques (M_{2acc}, M_{2NOT}) in the selection tables.

16.6.2 Permitted shaft loads for the output shaft

The values specified in the tables apply to the permitted shaft loads:

- For shaft dimensions in accordance with the catalog
- For output speeds n_{2m*} ≤ 20 rpm ($F_{2axN} = F_{2ax20}$; $F_{2radN} = F_{2rad20}$; $M_{2kN} = M_{2k20}$)
- Only if radial forces on the gear unit are stabilized by its pilots for the pitch circle diameter and flange housing design

16.6.2.1 V shaft design

Permitted shaft loads for V shaft design (solid shaft)

Type	z_2 [mm]	F_{2ax20} [N]	F_{2rad20} [N]	$F_{2rad,acc}$ [N]	M_{2k20} [Nm]	$M_{2k,acc}$ [Nm]
K1	40.0	1900	5000	5000	360	360
K2	42.0	2100	6000	6000	430	430
K3	45.0	2400	7000	7000	525	525
K4	52.0	3500	11200	11200	1050	1050
K5	72.0	3500	13450	13450	1580	1580
K6	72.0	4000	16000	16000	1960	1960
K7	85.0	5500	22000	22000	3200	3200
K8	60.0	7250	29000	29000	3800	3800
K9	87.0	16500	65000	65000	11200	11200
K10	84.0	25000	80000	80000	15200	15200

Reduced values apply in the case of a V shaft design (solid shaft) in conjunction with an NF housing design (foot + round flange):

Type	z_2 [mm]	F_{2ax20} [N]	F_{2rad20} [N]	$F_{2rad,acc}$ [N]	M_{2k20} [Nm]	$M_{2k,acc}$ [Nm]
K10	132.0	25000	64000	64000	15200	15200

For the V solid shaft design on both sides, the values for F_{2rad20} and M_{2k20} must be multiplied by a factor of 0.7.

For other output speeds, download diagrams at http://configurator.stoeber.de.

The following applies to output speeds n_{2m*} > 20 rpm:

$$F_{2axN} = \frac{F_{2ax20}}{\sqrt[3]{\frac{n_{2m*}}{20\ \text{rpm}}}} \qquad F_{2radN} = \frac{F_{2rad20}}{\sqrt[3]{\frac{n_{2m*}}{20\ \text{rpm}}}} \qquad M_{2kN} = \frac{M_{2k20}}{\sqrt[3]{\frac{n_{2m*}}{20\ \text{rpm}}}}$$

The values for F_{2ax20}, F_{2rad20} and M_{2k20} can be found in the table "Permitted shaft loads" in this chapter.

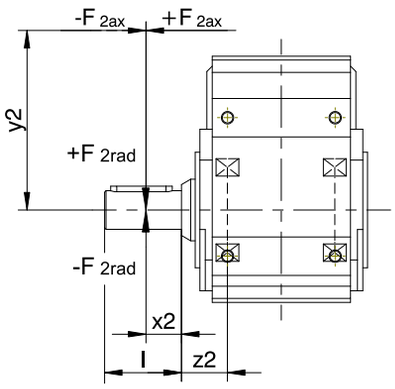

Fig. 1: Force application points for solid shaft

The specified values for F_{2rad20} are based on application of force at the middle of the output shaft: $x_2 = l/2$.

Shaft dimensions can be found in the "Dimensional drawings" chapter.

The following applies to other force application points:

$$M_{2k*} = \frac{2 \cdot F_{2ax*} \cdot y_2 + F_{2rad*} \cdot (x_2 + z_2)}{1000} \leq M_{2kN}$$

$$F_{2rad*} \leq F_{2radN}$$

$$F_{2ax*} \leq F_{2axN}$$

For applications with multiple axial and/or radial forces, you must add the forces as vectors.

In the event of EMERGENCY OFF operation (max. 1000 load changes), you can multiply the permitted forces and torques for F_{2ax20}, F_{2rad20} and M_{2k20} by a factor of two.

16.6.2.2 A and S shaft design

Permitted shaft loads for A shaft design (hollow shaft with keyway)

Type	z_2 [mm]	F_{2ax20} [N]	F_{2rad20} [N]	$F_{2rad,acc}$ [N]	M_{2k20} [Nm]	$M_{2k,acc}$ [Nm]
K1	40.0	1900	5000	5000	240	240
K2	42.0	2100	6000	6000	310	310
K3	45.0	2400	7000	7000	380	380
K4	52.0	3500	11200	11200	740	740
K5	39.0	2500	13450	13450	1000	1000
K6	42.0	3000	16000	16000	1300	1300
K7	45.0	4100	22000	22000	2100	2100
K8	50.0	5300	29000	29000	2600	2600
K9	56.0	7000	65000	65000	3600	3600
K10	56.0	9000	80000	80000	5000	5000

Permitted shaft loads for S shaft design (hollow shaft with shrink ring)

Type	z_2 [mm]	F_{2ax20} [N]	F_{2rad20} [N]	$F_{2rad,acc}$ [N]	M_{2k20} [Nm]	$M_{2k,acc}$ [Nm]
K1	40.0	1900	5000	5000	240	240
K2	42.0	2100	6000	6000	310	310
K3	45.0	2400	7000	7000	380	380
K4	52.0	3500	11200	11200	740	740
K5	39.0	2500	13450	13450	1000	1000
K6	42.0	3000	16000	16000	1300	1300
K7	45.0	4100	22000	22000	2100	2100
K8	50.0	5300	29000	29000	2600	2600
K9	56.0	7000	65000	65000	3600	3600
K10	56.0	9000	80000	80000	5000	5000

For other output speeds, download diagrams at http://configurator.stoeber.de.

The following applies to output speeds n_{2m*} > 20 rpm:

$$F_{2axN} = \frac{F_{2ax20}}{\sqrt[3]{\frac{n_{2m*}}{20\ rpm}}} \qquad F_{2radN} = \frac{F_{2rad20}}{\sqrt[3]{\frac{n_{2m*}}{20\ rpm}}} \qquad M_{2kN} = \frac{M_{2k20}}{\sqrt[3]{\frac{n_{2m*}}{20\ rpm}}}$$

The values for F_{2ax20}, F_{2rad20} and M_{2k20} can be found in the table "Permitted shaft loads" in this chapter.

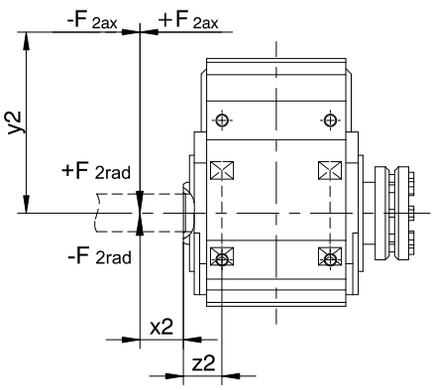

Fig. 2: Force application points for hollow shaft

You can determine the permitted radial forces from the permitted breakdown torque M_{2kN}. The actual radial forces may not exceed the permitted radial forces. The permitted radial forces pertain to the shaft end (x2 = 0).

$$M_{2k*} = \frac{2 \cdot F_{2ax*} \cdot y_2 + F_{2rad*} \cdot (x_2 + z_2)}{1000} \leq M_{2kN}$$

$$F_{2ax*} \leq F_{2axN}$$

For applications with multiple axial and/or radial forces, you must add the forces as vectors.

In the event of EMERGENCY OFF operation (max. 1000 load changes), you can multiply the permitted forces and torques for F_{2ax20}, F_{2rad20} and M_{2k20} by a factor of two.

16.6.3 Radial shaft seal rings

Leak-proofness

Our gear units are equipped with high-quality radial shaft seal rings and checked for leaks. However, a leak cannot be fully ruled out over the length of use of a gear unit. If you use a gear unit with goods incompatible with the lubricant, you must take measures to prevent direct contact with the gear unit lubricant in case of a leak.

16.6.4 Oil expansion tank

The gear units have a higher fill level in mounting position EL5. The oil expansion tank prevents oil from escaping out of the gear unit.

Notes

- We recommend using an oil expansion tank in mounting position EL5 (additional cost) for fast running gear units with an input speed n_1 > 1750 rpm and gear ratios i < 20.
- It is not possible to use an oil expansion tank if the plug connector is at 90°!
- The oil expansion tank can only be used with certain sizes; see the chapter [▶ 16.3.17]

16.7 Additional documentation

Additional documentation related to the product can be found at
http://www.stoeber.de/en/downloads/

Enter the ID of the documentation in the Search... field.

Documentation	ID
Operating manual for C/F/K/S gear units and gear motors	443027_en

17 EZ synchronous servo motors

Table of contents

17.1 Overview ... 514

17.2 Selection tables ... 515

17.2.1 EZ motors with convection cooling ... 516

17.2.2 EZ motors with forced ventilation ... 517

17.3 Torque/speed curves ... 518

17.4 Dimensional drawings ... 527

17.4.1 EZ3 motors (One Cable Solution) ... 527

17.4.2 EZ3 motors ... 528

17.4.3 EZ4 – EZ7 motors with convection cooling (One Cable Solution) ... 529

17.4.4 EZ4 – EZ8 motors with convection cooling ... 530

17.4.5 EZ4 – EZ7 motors with forced ventilation (One Cable Solution) ... 531

17.4.6 EZ4 – EZ8 motors with forced ventilation ... 532

17.5 Type designation ... 533

17.6 Product description ... 533

17.6.1 General features ... 533

17.6.2 Electrical features ... 534

17.6.3 Ambient conditions ... 534

17.6.4 Encoders ... 534

17.6.5 Temperature sensor ... 537

17.6.6 Cooling ... 539

17.6.7 Holding brake ... 540

17.6.8 Connection method ... 542

17.7 Project configuration ... 549

17.7.1 Calculation of the operating point ... 550

17.7.2 Permitted shaft loads ... 551

17.7.3 Derating ... 552

17.8 Further information ... 553

17.8.1 Directives and standards ... 553

17.8.2 Identifiers and test symbols ... 553

17.8.3 Additional documentation ... 553

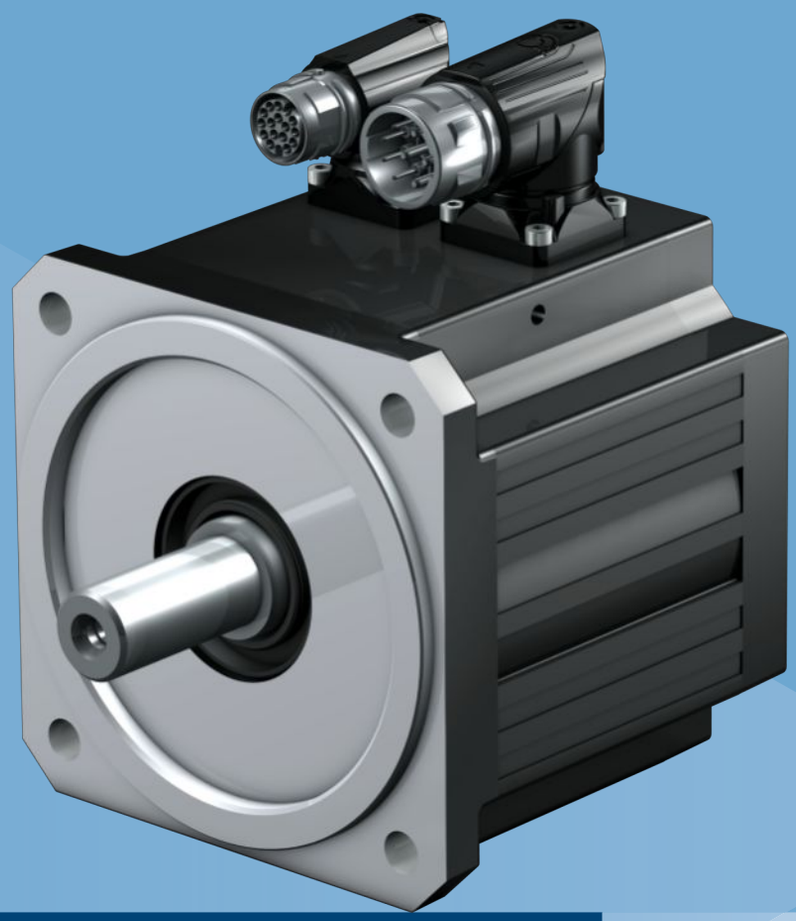

17 Synchronous servo motors EZ

17.1 Overview

Synchronous servo motors with single tooth winding

Features

High dynamics	✓
Short length	✓
Super compact due to tooth-coil winding method with the highest possible copper fill factor	✓
Backlash-free holding brake (optional)	✓
Electronic nameplate for fast and reliable commissioning	✓
Convection cooling or forced ventilation (optional)	✓
Optical, inductive EnDat absolute encoders or resolvers	✓
Elimination of referencing with multi-turn absolute encoders (optional)	✓
One Cable Solution (OCS) with EnDat 3 encoder (optional)	✓
Rotatable plug connectors with quick lock	✓

Torques

M_N	0.89 – 77.2 Nm
M_0	0.95 – 94 Nm

17.2 Selection tables

The technical data specified in the selection tables applies to:

- Installation altitudes up to 1000 m above sea level
- Surrounding temperatures from −15 °C to +40 °C
- Operation on a STOBER drive controller
- DC link voltage U_{ZK} = DC 540 V
- Coating: RAL 9005 Jet black, matte

In addition, the technical data applies to an uninsulated design with the following thermal mounting conditions:

Type	Dimensions of steel mounting flange (thickness x width x height)	Convection surface area Steel mounting flange
EZ3 – EZ5	23 x 210 x 275 mm	0.16 m^2
EZ7 – EZ8	28 x 300 x 400 mm	0.3 m^2

Note the differing ambient conditions in Chapter Derating

Formula symbols

An explanation of the formula symbols can be found in Chapter [▶ 23.1].

Observe the additional information on the following formula symbols:

- I_0 = RMS value of the line-to-line current when stall torque M_0 is generated (tolerance ±5%).
- I_{max} = RMS value of the short-term maximum permitted line-to-line current when maximum torque M_{max} is generated (tolerance ±5%). Exceeding I_{max} may lead to irreversible damage (demagnetization) of the rotor.
- I_N = RMS value of the line-to-line current when nominal torque M_N is generated at the nominal point (tolerance ±5%).
- M_0 = Torque that a motor is continuously able to deliver at a speed of 10 rpm (tolerance ±5%). At a speed of 0 rpm, a minor continuous torque has to be taken into account. Contact your STOBER customer advisor for such an application.

17.2.1 EZ motors with convection cooling

Type	K_{EM} [V/1000 rpm]	n_N [rpm]	M_N [Nm]	I_N [A]	$K_{M,N}$ [Nm/A]	P_N [kW]	M_0 [Nm]	I_0 [A]	K_{M0} [Nm/A]	M_R [Nm]	M_{max} [Nm]	I_{max} [A]	R_{U-V} [Ω]	L_{U-V} [mH]	T_{el} [ms]	J_{dyn} [kgcm²]	m_{dyn} [kg]
EZ301U	40	6000	0.89	1.93	0.46	0.56	0.95	2.02	0.49	0.04	2.80	12.7	11.70	39.80	3.40	0.19	1.50
EZ301U	40	3000	0.93	1.99	0.47	0.29	0.95	2.02	0.49	0.04	2.80	12.7	11.70	39.80	3.40	0.19	1.50
EZ302U	42	6000	1.50	3.18	0.47	0.94	1.68	3.48	0.49	0.04	5.00	17.8	4.50	18.70	4.16	0.29	2.10
EZ302U	86	3000	1.59	1.60	0.99	0.50	1.68	1.67	1.03	0.04	5.00	8.55	17.80	75.00	4.21	0.29	2.10
EZ303U	55	6000	1.96	3.17	0.62	1.2	2.25	3.55	0.65	0.04	7.00	16.9	4.90	21.10	4.31	0.40	2.60
EZ303U	109	3000	2.07	1.63	1.27	0.65	2.19	1.71	1.30	0.04	7.00	8.25	20.30	68.70	5.24	0.40	2.60
EZ401U	47	6000	2.30	4.56	0.50	1.4	2.80	5.36	0.53	0.04	8.50	33.0	1.94	11.52	5.94	0.93	4.00
EZ401U	96	3000	2.80	2.74	1.02	0.88	3.00	2.88	1.06	0.04	8.50	16.5	6.70	37.70	5.63	0.93	4.00
EZ402U	60	6000	3.50	5.65	0.62	2.2	4.90	7.43	0.66	0.04	16.0	43.5	1.20	8.88	7.40	1.63	5.10
EZ402U	94	3000	4.70	4.40	1.07	1.5	5.20	4.80	1.09	0.04	16.0	26.5	3.00	21.80	7.26	1.63	5.10
EZ404U	78	6000	5.80	7.18	0.81	3.6	8.40	9.78	0.86	0.04	29.0	51.0	0.89	7.07	7.94	2.98	7.20
EZ404U	116	3000	6.90	5.80	1.19	2.2	8.60	6.60	1.31	0.04	29.0	35.0	1.85	15.00	8.11	2.98	7.20
EZ501U	68	6000	3.40	4.77	0.71	2.1	4.40	5.80	0.77	0.06	16.0	31.0	2.10	12.10	5.76	2.90	5.00
EZ501U	97	3000	4.30	3.74	1.15	1.4	4.70	4.00	1.19	0.06	16.0	22.0	3.80	23.50	6.18	2.90	5.00
EZ502U	72	6000	5.20	7.35	0.71	3.3	7.80	9.80	0.80	0.06	31.0	59.0	0.76	5.60	7.37	5.20	6.50
EZ502U	121	3000	7.40	5.46	1.36	2.3	8.00	5.76	1.40	0.06	31.0	33.0	2.32	16.80	7.24	5.20	6.50
EZ503U	84	6000	6.20	7.64	0.81	3.9	10.6	11.6	0.92	0.06	43.0	63.5	0.62	5.00	8.06	7.58	8.00
EZ503U	119	3000	9.70	6.90	1.41	3.1	11.1	7.67	1.46	0.06	43.0	41.0	1.25	10.00	8.00	7.58	8.00
EZ505U	103	4500	9.50	8.94	1.06	4.5	15.3	13.4	1.15	0.06	67.0	73.0	0.50	4.47	8.94	12.2	10.9
EZ505U	141	3000	13.5	8.80	1.53	4.2	16.0	10.0	1.61	0.06	67.0	52.0	0.93	8.33	8.96	12.2	10.9
EZ701U	76	6000	5.20	6.68	0.78	3.3	7.90	9.38	0.87	0.24	20.0	31.0	0.87	8.13	9.34	8.50	8.30
EZ701U	95	3000	7.40	7.20	1.03	2.3	8.30	8.00	1.07	0.24	20.0	25.0	1.30	12.83	9.87	8.50	8.30
EZ702U	82	6000	7.20	8.96	0.80	4.5	14.3	16.5	0.88	0.24	41.0	60.5	0.34	3.90	11.47	13.7	10.8
EZ702U	133	3000	12.0	8.20	1.46	3.8	14.4	9.60	1.53	0.24	41.0	36.0	1.00	11.73	11.73	13.7	10.8
EZ703U	99	4500	12.1	11.5	1.05	5.7	20.0	17.8	1.14	0.24	65.0	78.0	0.36	4.42	12.28	21.6	12.8
EZ703U	122	3000	16.5	11.4	1.45	5.2	20.8	14.0	1.50	0.24	65.0	62.0	0.52	6.80	13.08	21.6	12.8
EZ705U	106	4500	16.4	14.8	1.11	7.7	30.0	25.2	1.20	0.24	104	114	0.22	2.76	12.55	34.0	18.3
EZ705U	140	3000	21.3	14.2	1.50	6.7	30.2	19.5	1.56	0.24	104	87.0	0.33	4.80	14.55	34.0	18.3
EZ802U	90	4500	10.5	11.2	0.94	5.0	34.5	33.3	1.05	0.30	100	135	0.13	1.90	14.60	58.0	26.6
EZ802U	136	3000	22.3	13.9	1.60	7.0	37.1	22.3	1.68	0.30	100	84.0	0.30	5.00	16.66	58.0	26.6
EZ803U	131	3000	26.6	17.7	1.50	8.4	48.2	31.1	1.56	0.30	145	124	0.18	2.79	15.50	83.5	32.7
EZ805U	142	2000	43.7	25.9	1.69	9.2	66.1	37.9	1.75	0.30	205	155	0.13	2.22	17.08	133	45.8

17.2.2 EZ motors with forced ventilation

Type	K_{EM} [V/1000 rpm]	n_N [rpm]	M_N [Nm]	I_N [A]	$K_{M,N}$ [Nm/A]	P_N [kW]	M_0 [Nm]	I_0 [A]	K_{M0} [Nm/A]	M_R [Nm]	M_{max} [Nm]	I_{max} [A]	R_{U-V} [Ω]	L_{U-V} [mH]	T_{el} [ms]	J_{dyn} [kgcm²]	m_{dyn} [kg]
EZ401B	47	6000	2.90	5.62	0.52	1.8	3.50	6.83	0.52	0.04	8.50	33.0	1.94	11.52	5.94	0.93	5.40
EZ401B	96	3000	3.40	3.40	1.00	1.1	3.70	3.60	1.04	0.04	8.50	16.5	6.70	37.70	5.63	0.93	5.40
EZ402B	60	6000	5.10	7.88	0.65	3.2	6.40	9.34	0.69	0.04	16.0	43.5	1.20	8.88	7.40	1.63	6.50
EZ402B	94	3000	5.90	5.50	1.07	1.9	6.30	5.80	1.09	0.04	16.0	26.5	3.00	21.80	7.26	1.63	6.50
EZ404B	78	6000	8.00	9.98	0.80	5.0	10.5	12.0	0.88	0.04	29.0	51.0	0.89	7.07	7.94	2.98	8.60
EZ404B	116	3000	10.2	8.20	1.24	3.2	11.2	8.70	1.29	0.04	29.0	35.0	1.85	15.00	8.11	2.98	8.60
EZ501B	68	6000	4.50	6.70	0.67	2.8	5.70	7.50	0.77	0.06	16.0	31.0	2.10	12.10	5.76	2.90	7.00
EZ501B	97	3000	5.40	4.70	1.15	1.7	5.80	5.00	1.17	0.06	16.0	22.0	3.80	23.50	6.18	2.90	7.00
EZ502B	72	6000	8.20	11.4	0.72	5.2	10.5	13.4	0.79	0.06	31.0	59.0	0.76	5.60	7.37	5.20	8.50
EZ502B	121	3000	10.3	7.80	1.32	3.2	11.2	8.16	1.38	0.06	31.0	33.0	2.32	16.80	7.24	5.20	8.50
EZ503B	84	6000	10.4	13.5	0.77	6.5	14.8	15.9	1.07	0.06	43.0	63.5	0.62	5.00	8.06	7.58	10.0
EZ503B	119	3000	14.4	10.9	1.32	4.5	15.9	11.8	1.35	0.06	43.0	41.0	1.25	10.00	8.00	7.58	10.0
EZ505B	103	4500	16.4	16.4	1.00	7.7	22.0	19.4	1.14	0.06	67.0	73.0	0.50	4.47	8.94	12.2	12.9
EZ505B	141	3000	20.2	13.7	1.47	6.4	23.4	14.7	1.60	0.06	67.0	52.0	0.93	8.33	8.96	12.2	12.9
EZ701B	76	6000	7.50	10.6	0.71	4.7	10.2	12.4	0.84	0.24	20.0	31.0	0.87	8.13	9.34	8.50	11.2
EZ701B	95	3000	9.70	9.50	1.02	3.1	10.5	10.0	1.07	0.24	20.0	25.0	1.30	12.83	9.87	8.50	11.2
EZ702B	82	6000	12.5	16.7	0.75	7.9	19.3	22.1	0.89	0.24	41.0	60.5	0.34	3.90	11.47	13.7	13.7
EZ702B	133	3000	16.6	11.8	1.41	5.2	19.3	12.9	1.51	0.24	41.0	36.0	1.00	11.73	11.73	13.7	13.7
EZ703B	99	4500	19.8	20.3	0.98	9.3	27.2	24.2	1.13	0.24	65.0	78.0	0.36	4.42	12.28	21.6	15.7
EZ703B	122	3000	24.0	18.2	1.32	7.5	28.0	20.0	1.41	0.24	65.0	62.0	0.52	6.80	13.08	21.6	15.7
EZ705B	106	4500	27.7	25.4	1.09	13	39.4	32.8	1.21	0.24	104	114	0.22	2.76	12.55	34.0	21.2
EZ705B	140	3000	33.8	22.9	1.48	11	41.8	26.5	1.59	0.24	104	87.0	0.33	4.80	14.55	34.0	21.2
EZ802B	90	4500	30.6	30.5	1.00	14	47.4	45.1	1.06	0.30	100	135	0.13	1.90	14.60	58.0	31.6
EZ802B	136	3000	34.3	26.5	1.29	11	47.9	28.9	1.67	0.30	100	84.0	0.30	5.00	16.66	58.0	31.6
EZ803B	131	3000	49.0	35.9	1.37	15	66.7	42.3	1.58	0.30	145	124	0.18	2.79	15.50	83.5	37.7
EZ805B	142	2000	77.2	45.2	1.71	16	94.0	53.9	1.75	0.30	205	155	0.13	2.22	17.08	133	51.8

17.3 Torque/speed curves

Torque/speed curves depend on the nominal speed and/or winding design of the motor and the DC link voltage of the drive controller that is used. The following torque/speed curves apply to the DC link voltage DC 540 V.

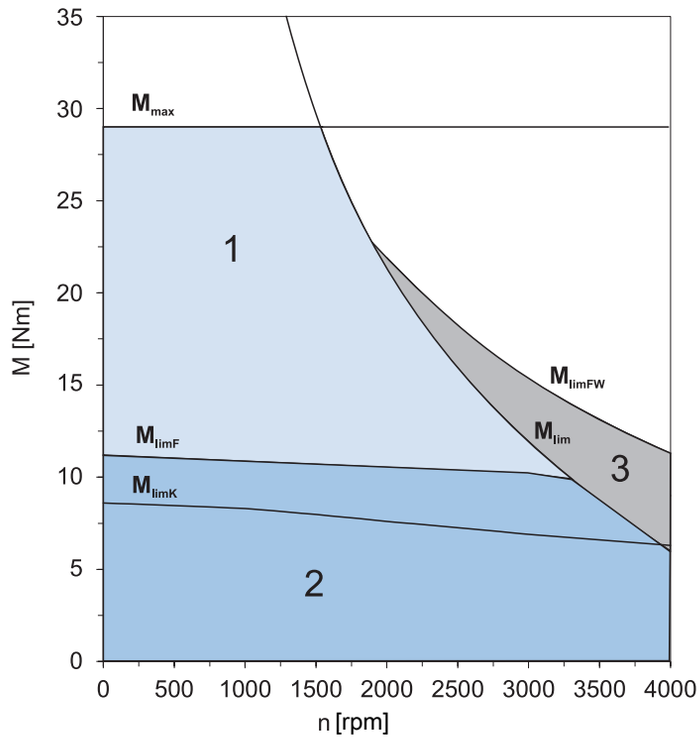

Fig. 1: Explanation of a torque/speed curve

1	Torque range for brief operation (ED_{10} < 100%) with Δϑ = 100 K	2	Torque range for continuous operation with constant load (S1 mode, ED_{10} = 100%) with Δϑ = 100 K
3	Field weakening range (can be used only with operation on STOBER drive controllers)		

EZ301 (n_N=3000 rpm)

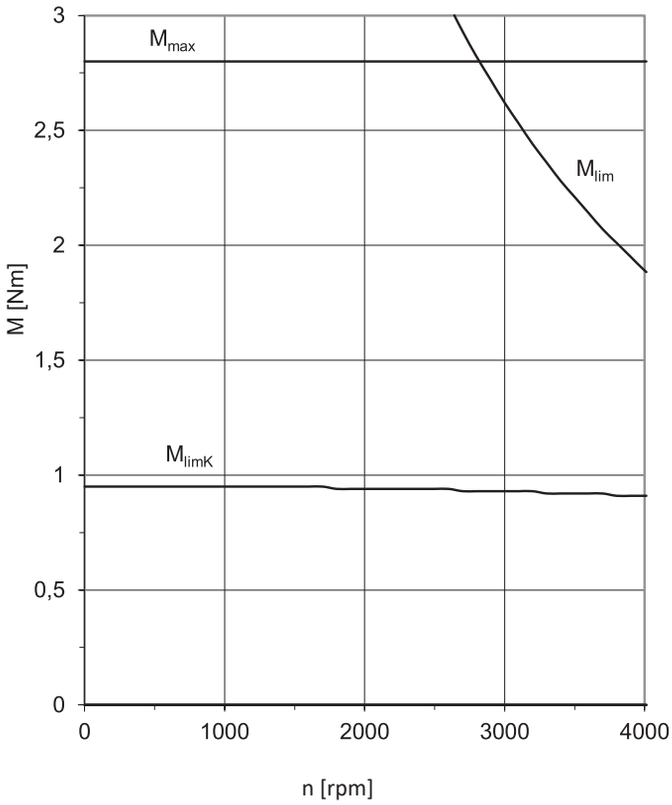

EZ301 (n_N=6000 rpm)

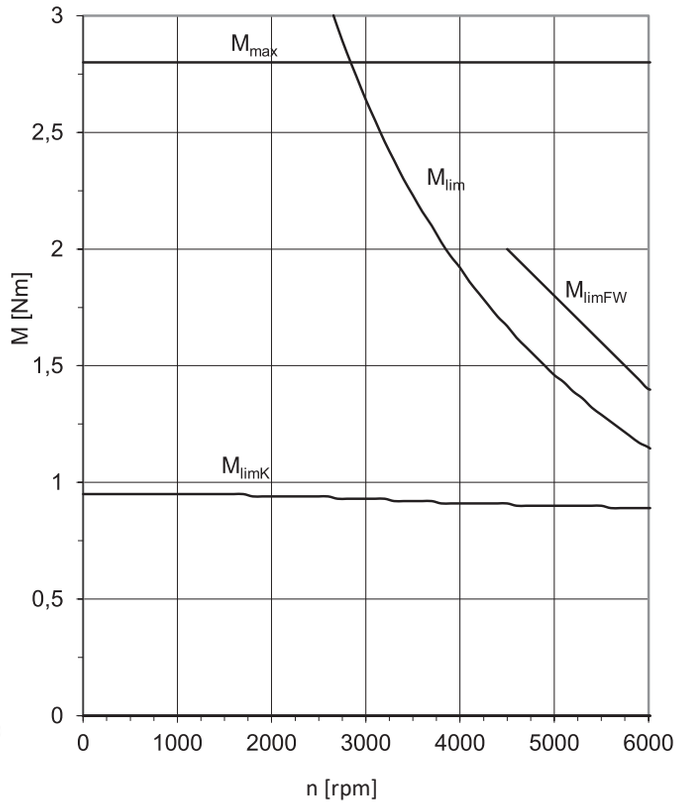

EZ302 (n_N=3000 rpm)

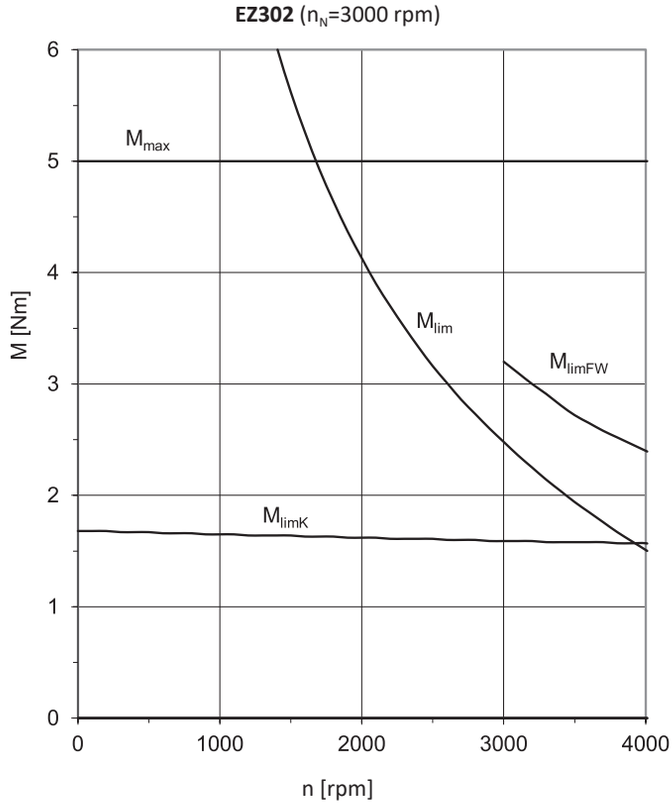

EZ302 (n_N=6000 rpm)

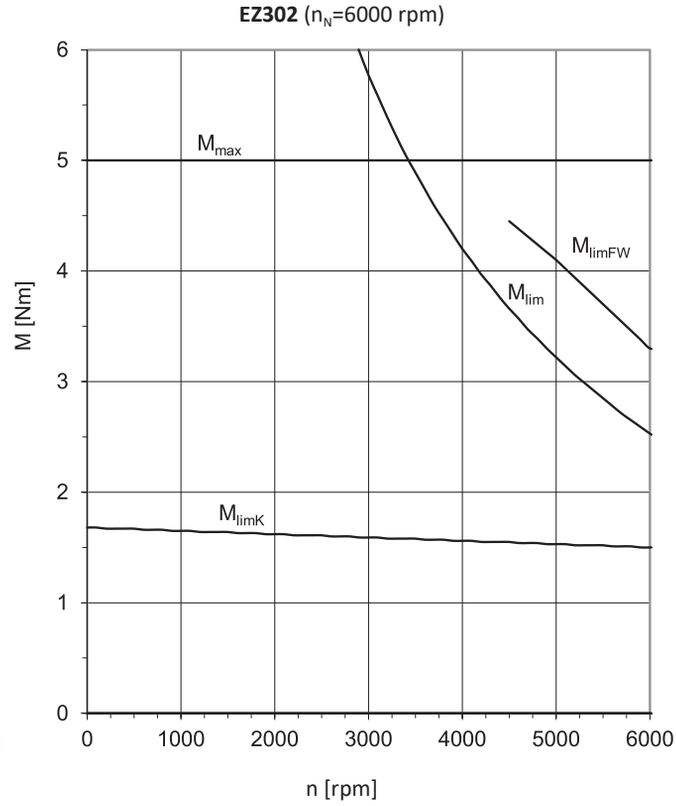

EZ303 (n_N=3000 rpm)

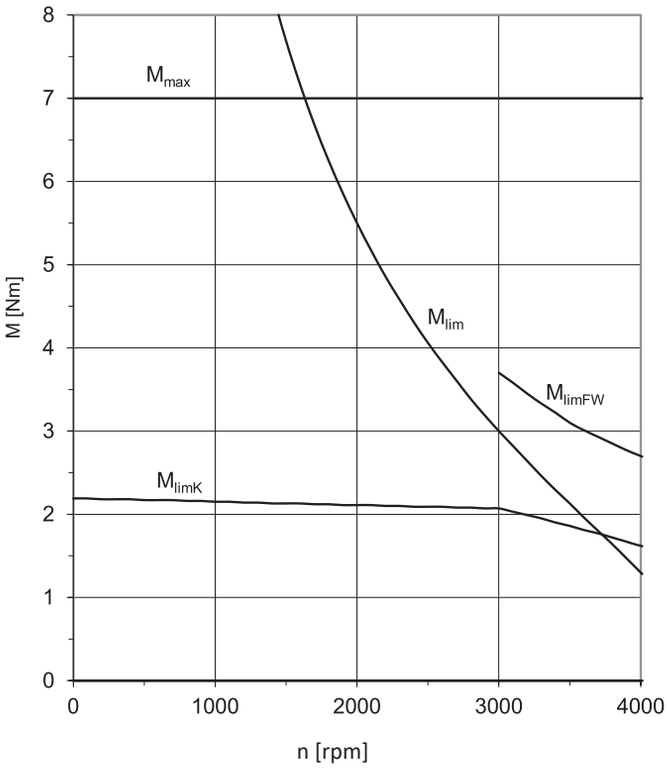

EZ303 (n_N=6000 rpm)

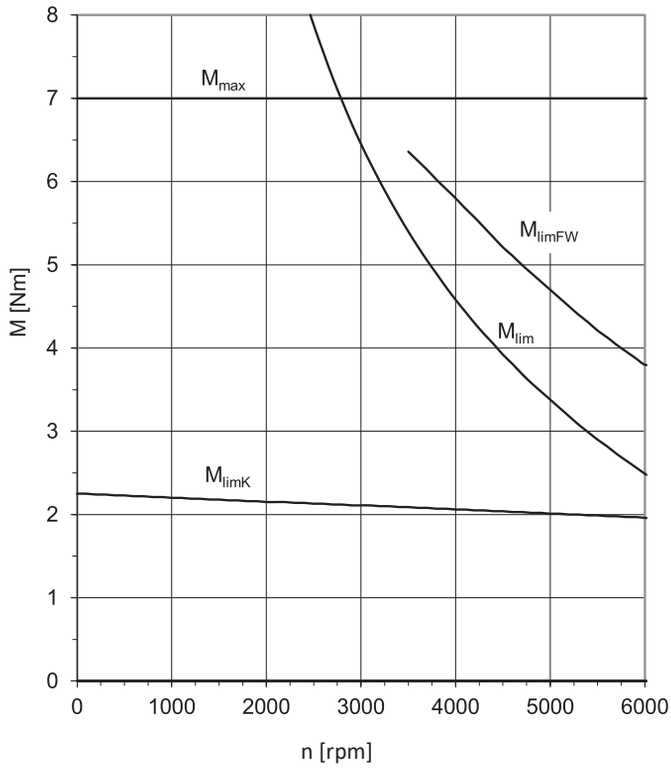

EZ401 (n_N=3000 rpm)

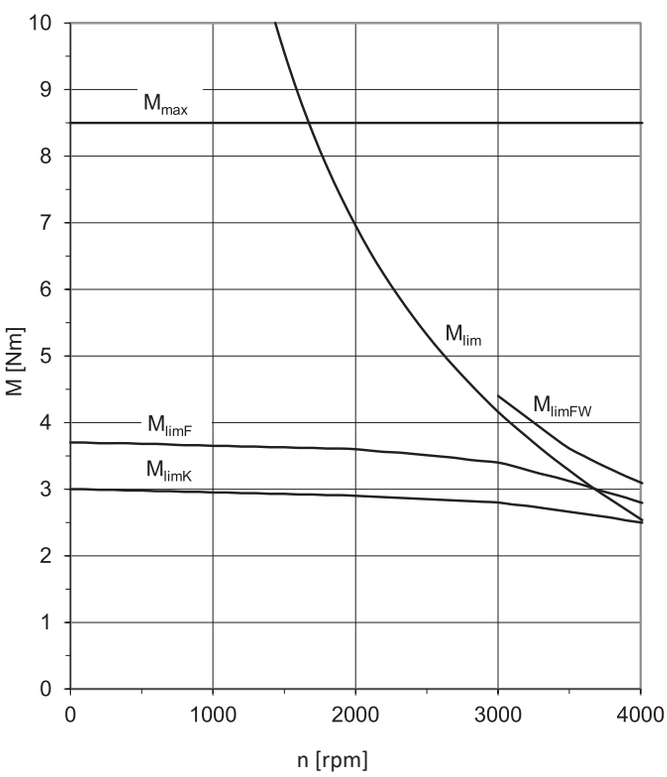

EZ401 (n_N=6000 rpm)

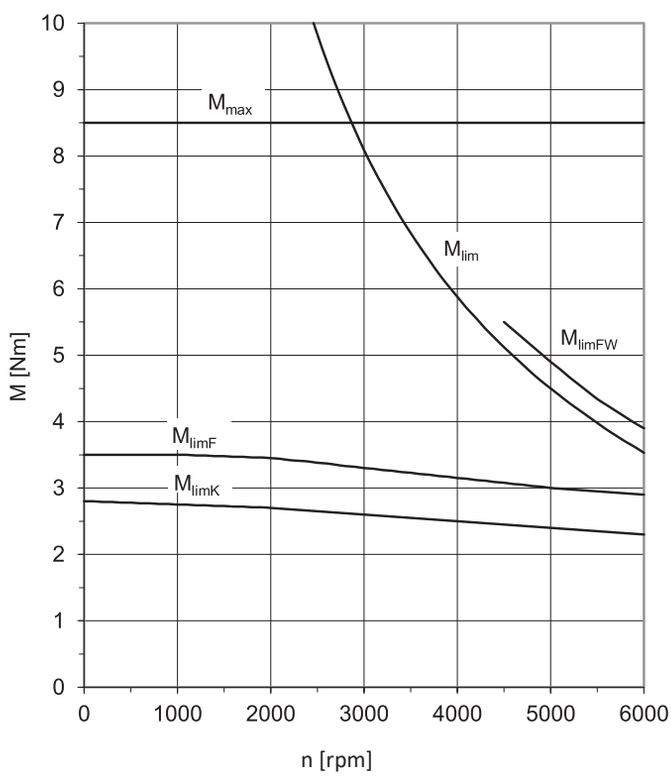

EZ402 (n_N=3000 rpm)

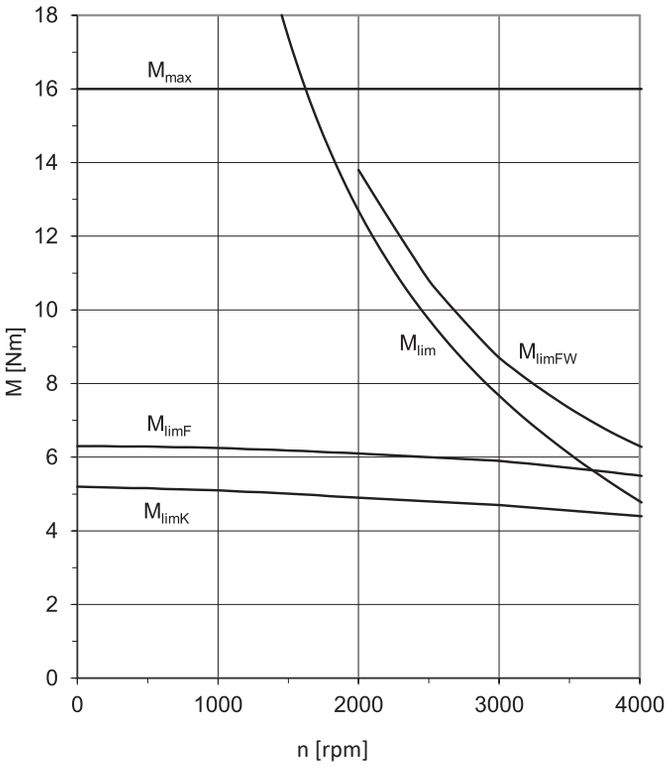

EZ402 (n_N=6000 rpm)

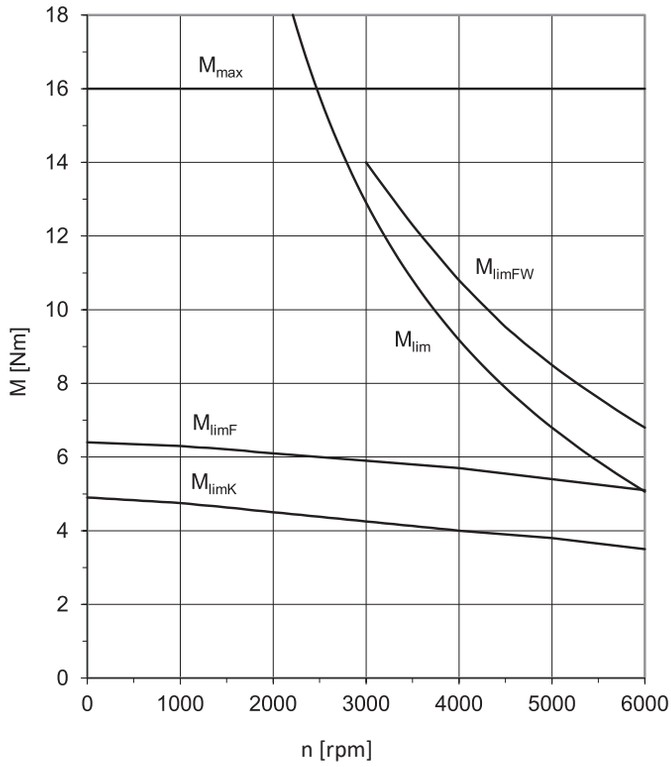

EZ404 (n_N=3000 rpm)

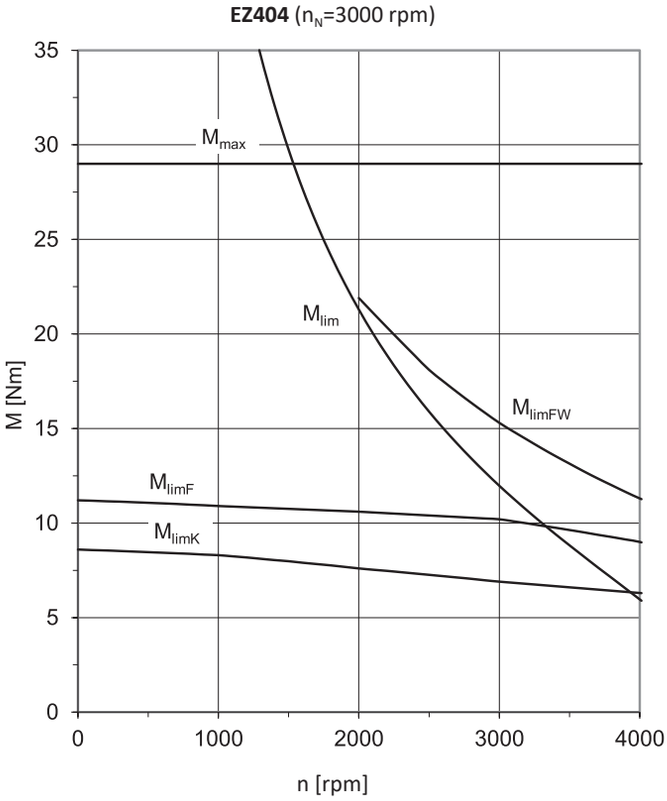

EZ404 (n_N=6000 rpm)

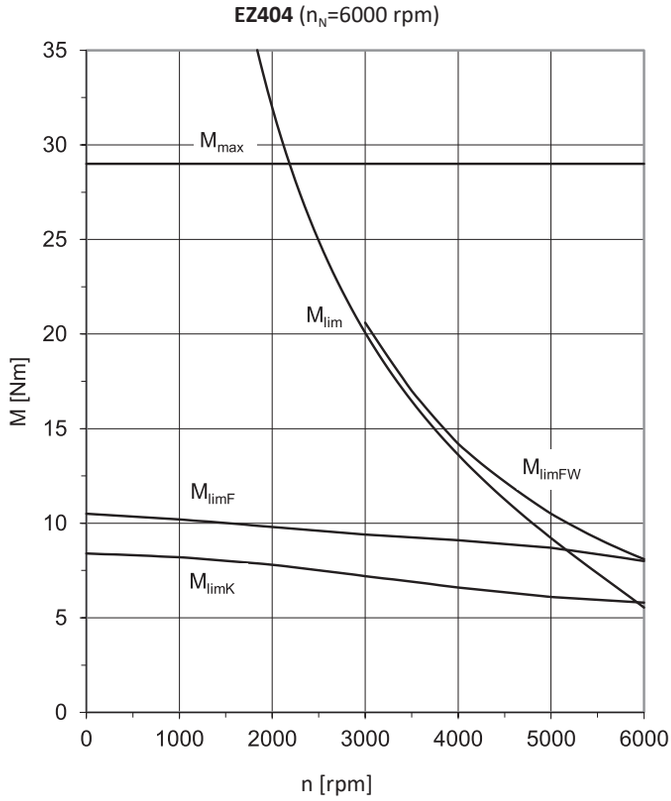

EZ501 (n_N=3000 rpm)

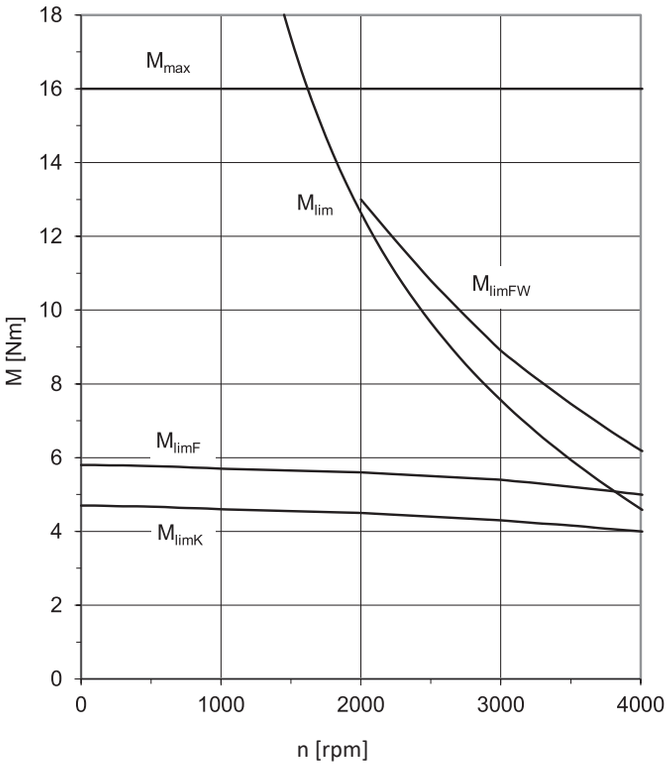

EZ501 (n_N=6000 rpm)

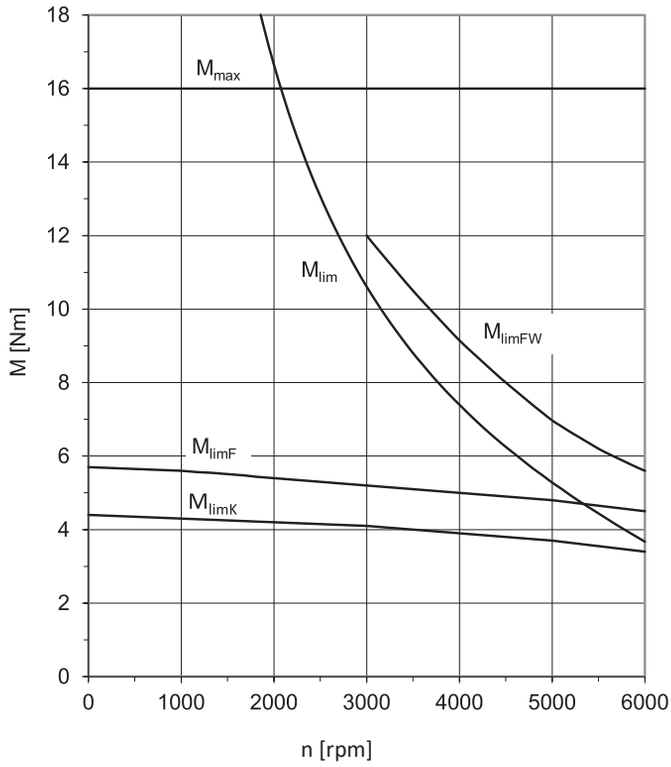

EZ502 (n_N=3000 rpm)

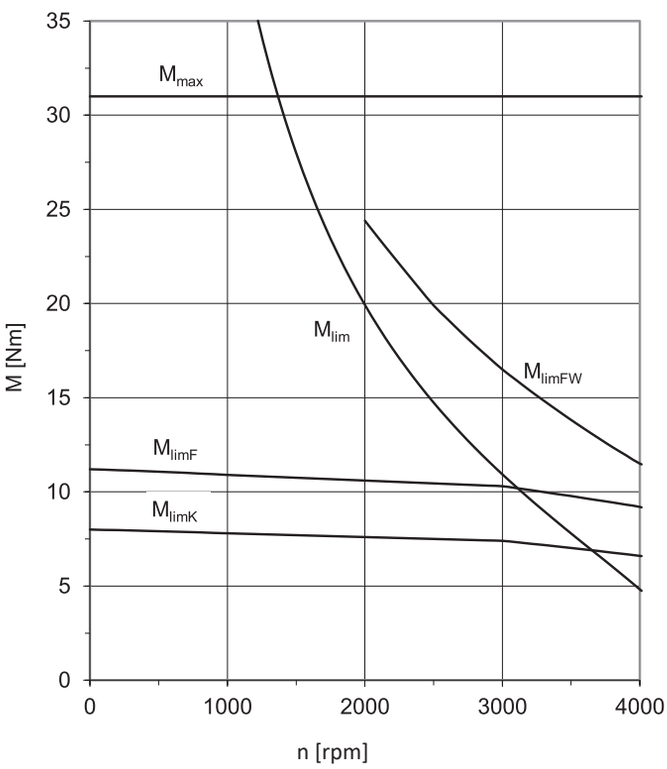

EZ502 (n_N=6000 rpm)

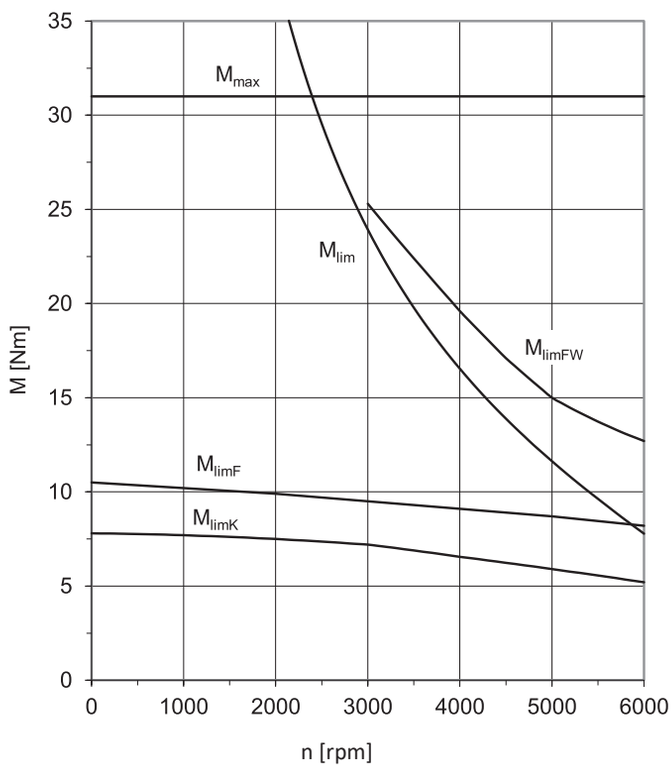

EZ503 (n_N=3000 rpm)

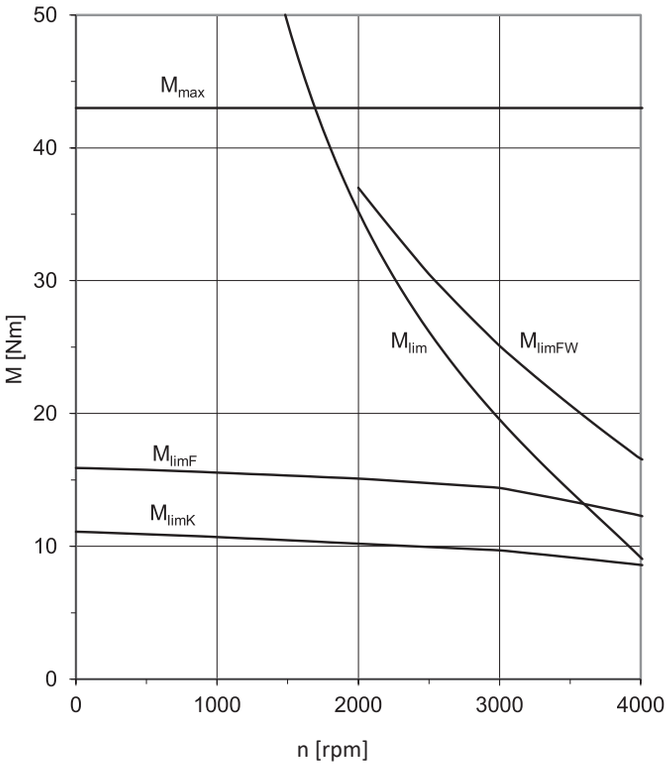

EZ503 (n_N=6000 rpm)

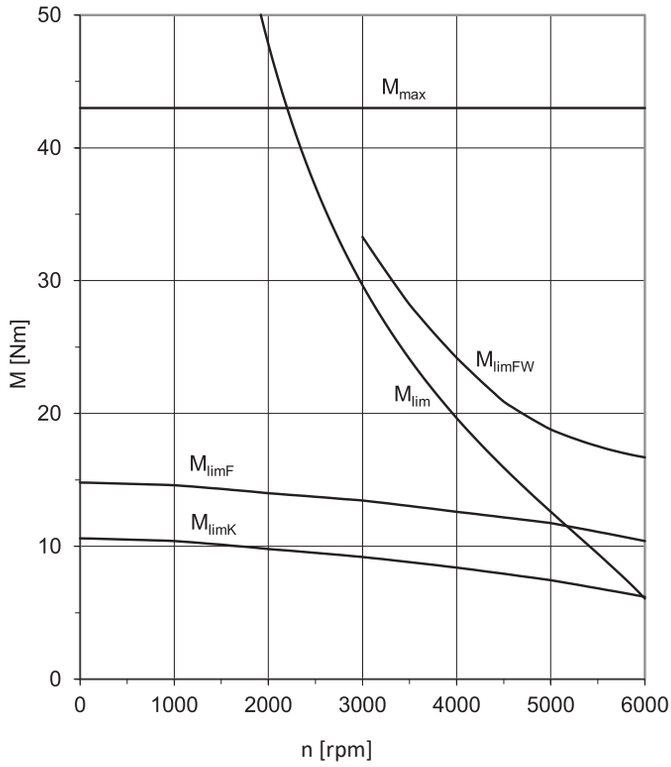

EZ505 (n_N=3000 rpm)

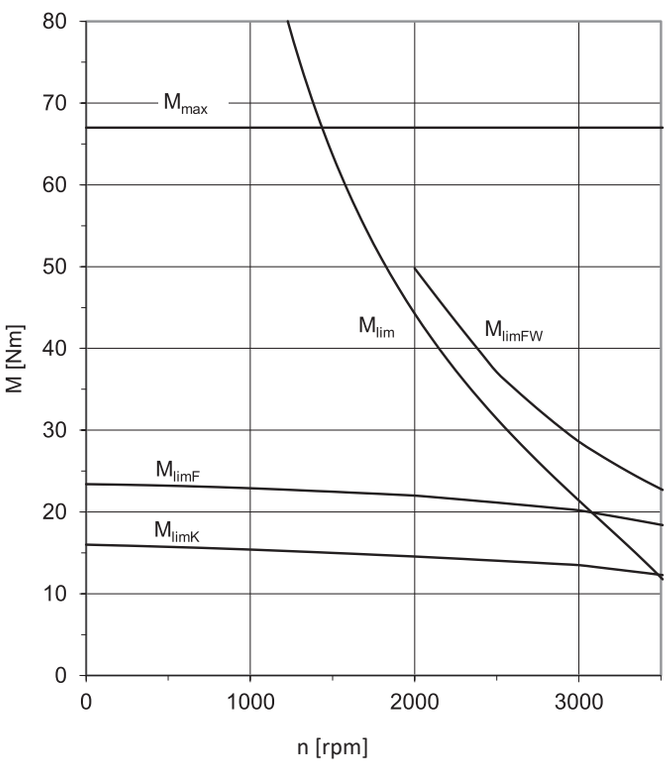

EZ505 (n_N=4500 rpm)

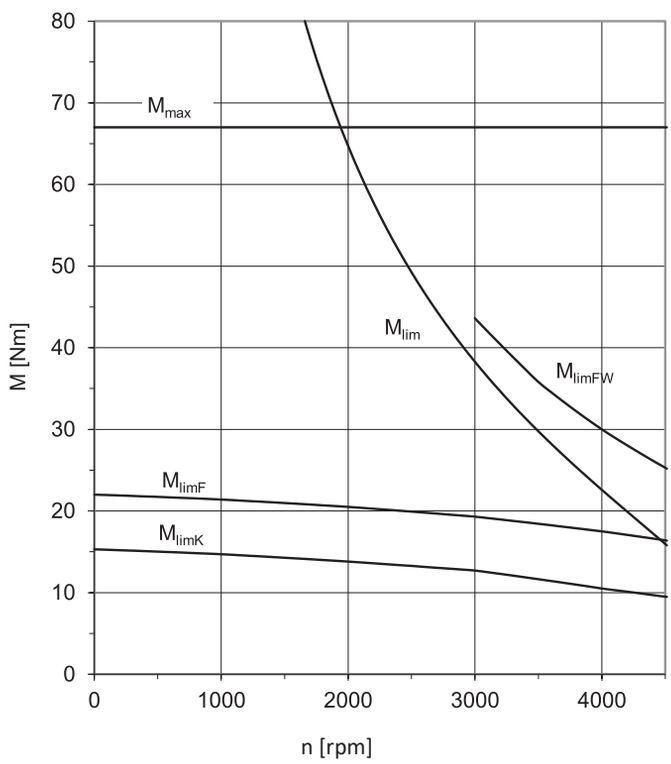

EZ701 (n_N=3000 rpm)

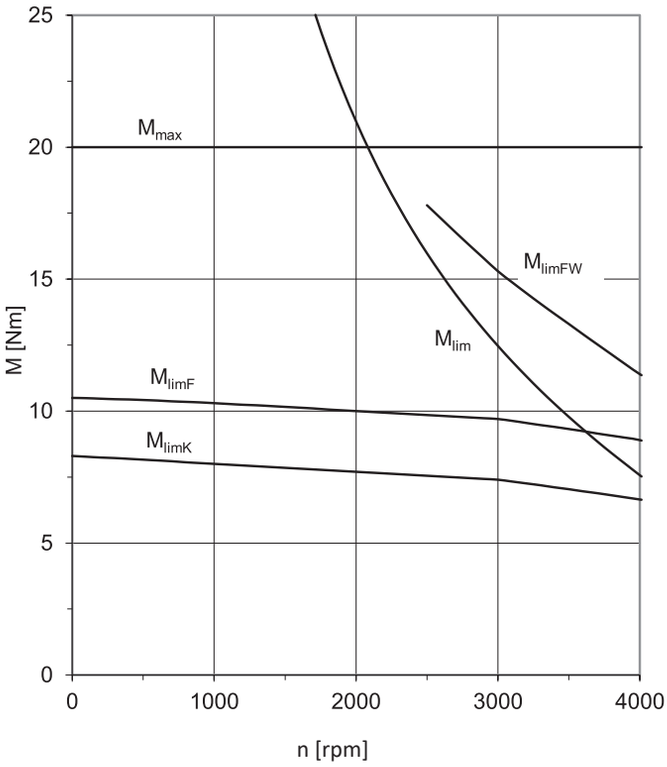

EZ701 (n_N=6000 rpm)

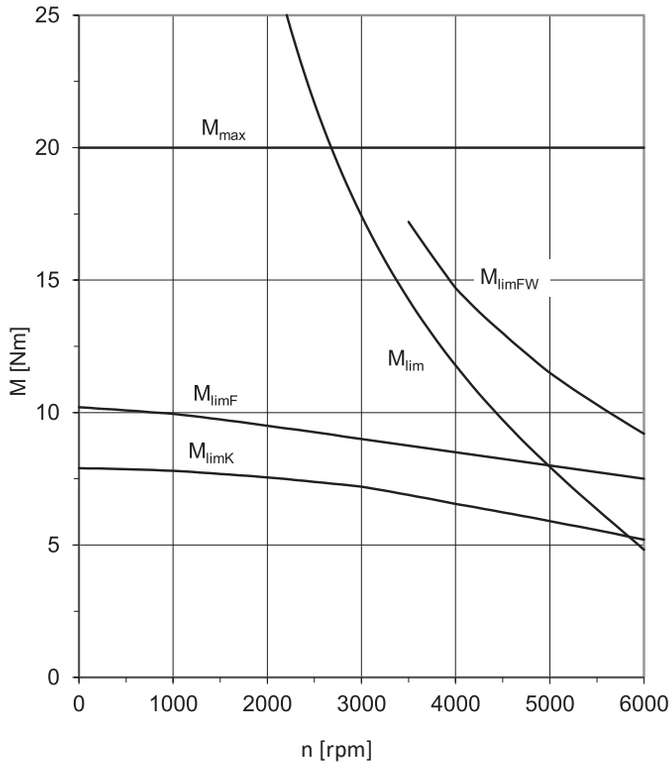

EZ702 (n_N=3000 rpm)

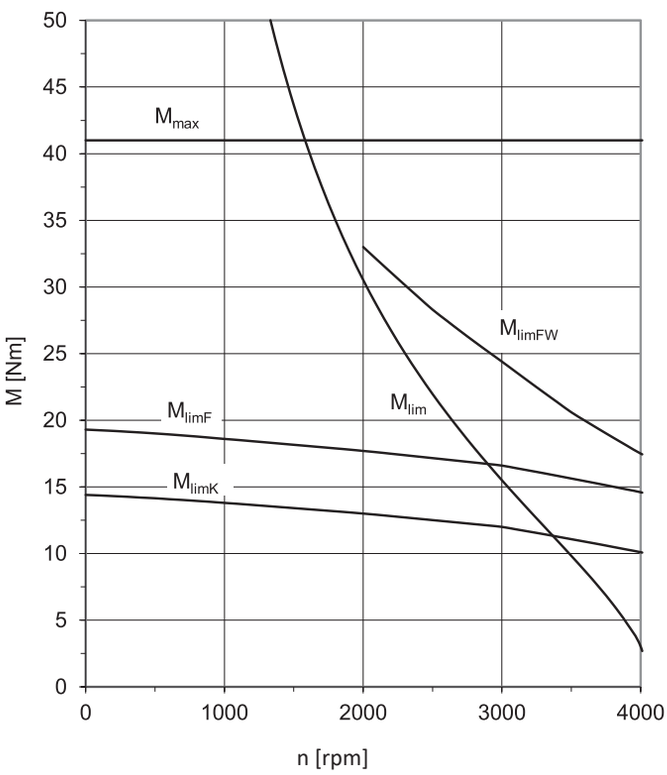

EZ702 (n_N=6000 rpm)

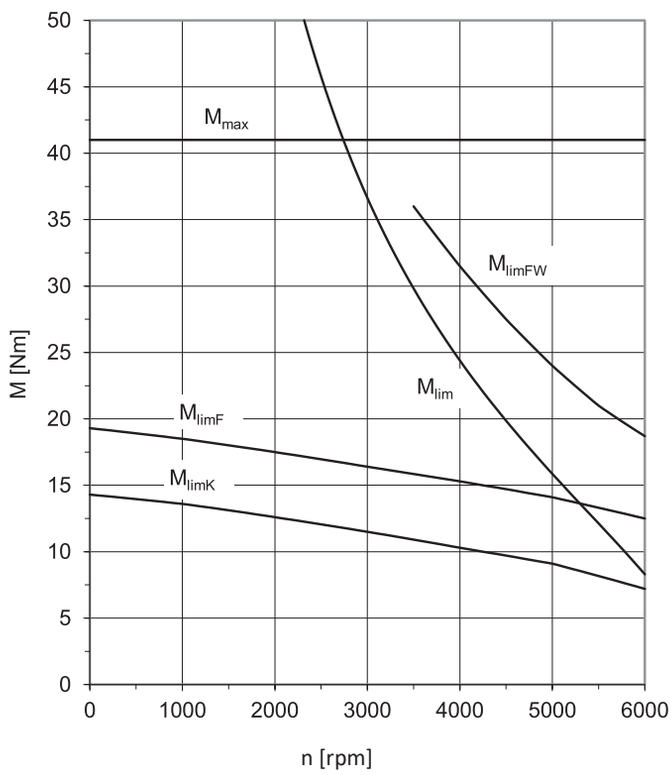

EZ703 (n_N=3000 rpm)

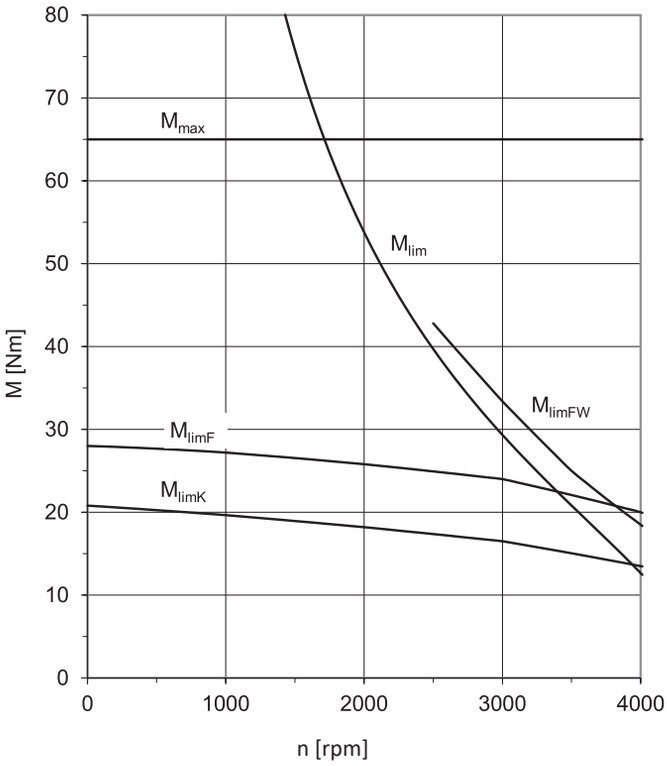

EZ703 (n_N=4500 rpm)

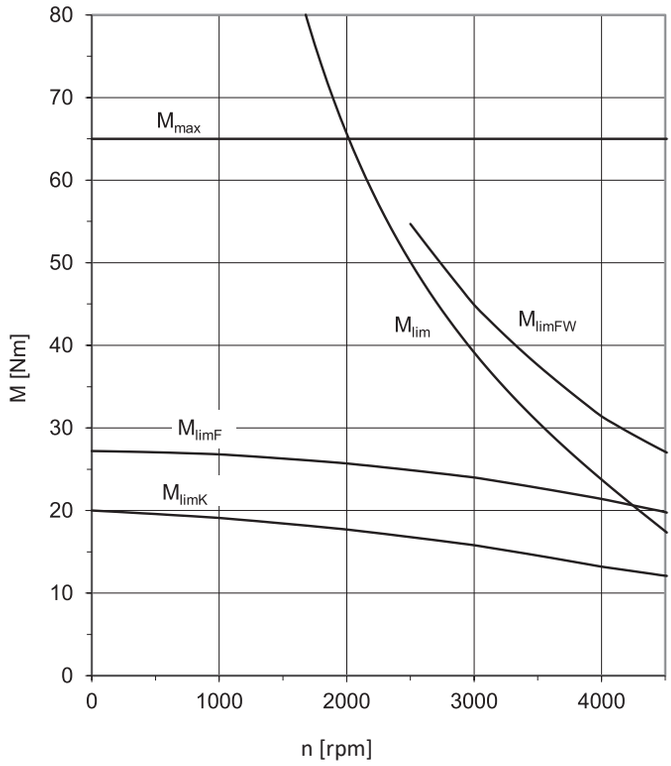

EZ705 (n_N=3000 rpm)

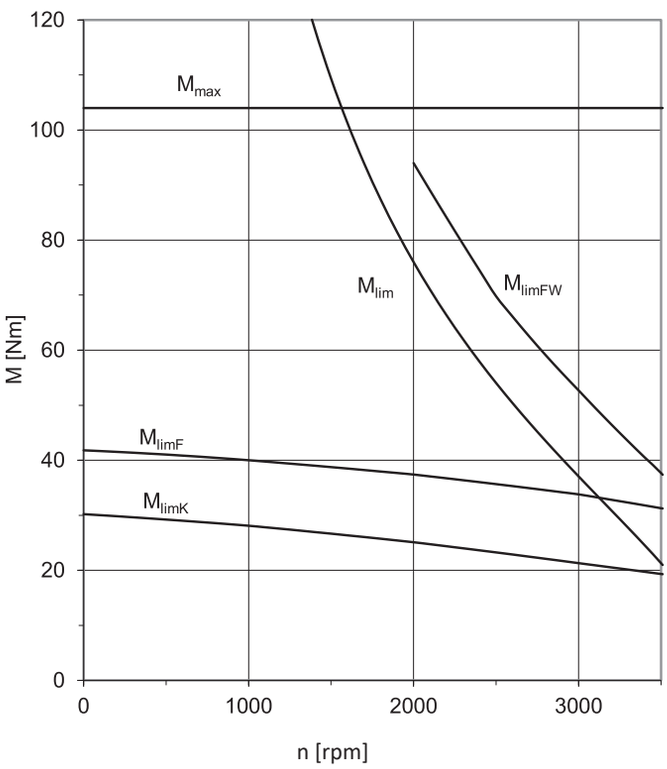

EZ705 (n_N=4500 rpm)

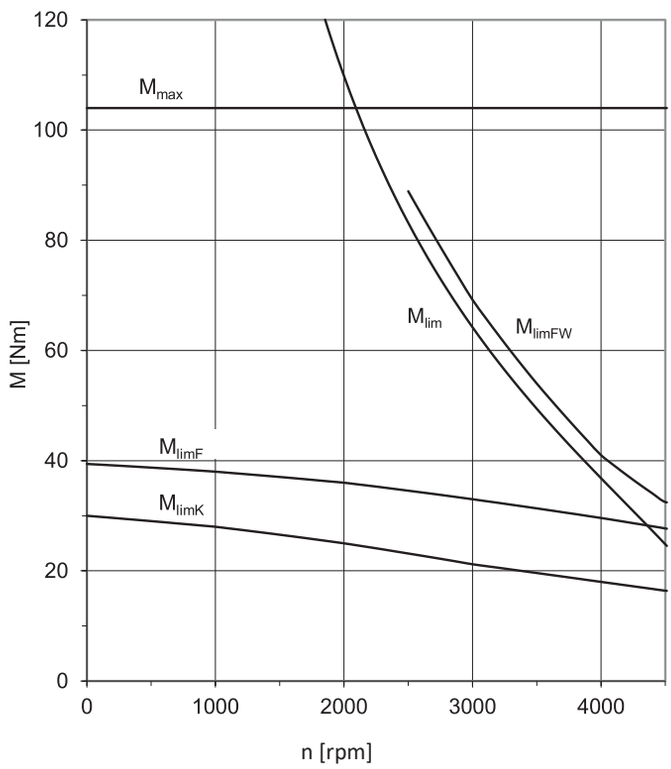

EZ802 (n_N=3000 rpm)

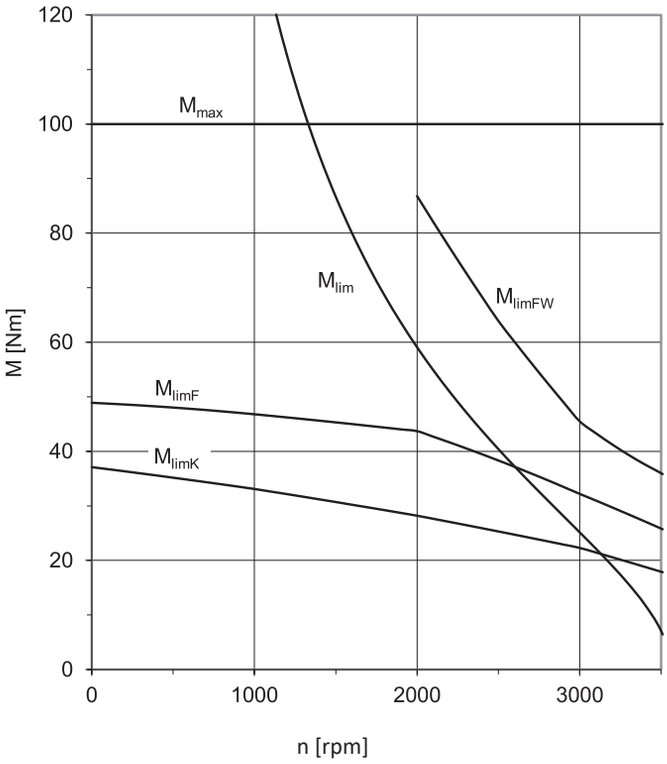

EZ802 (n_N=4500 rpm)

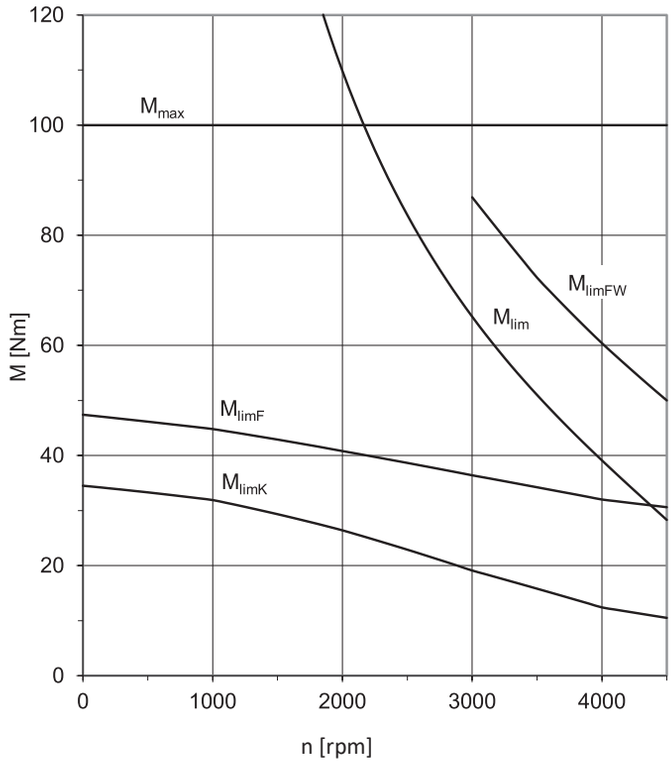

EZ803 (n_N=3000 rpm)

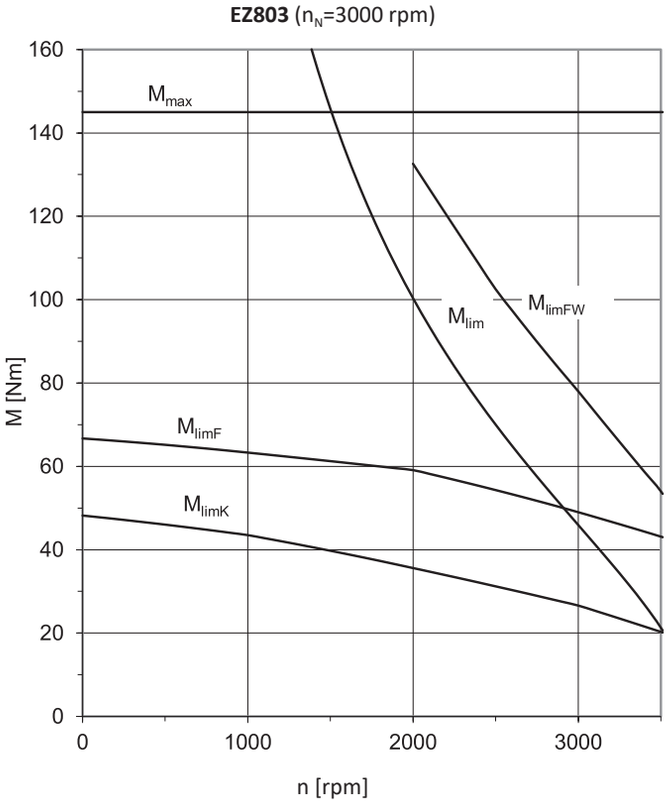

EZ805 (n_N=2000 rpm)

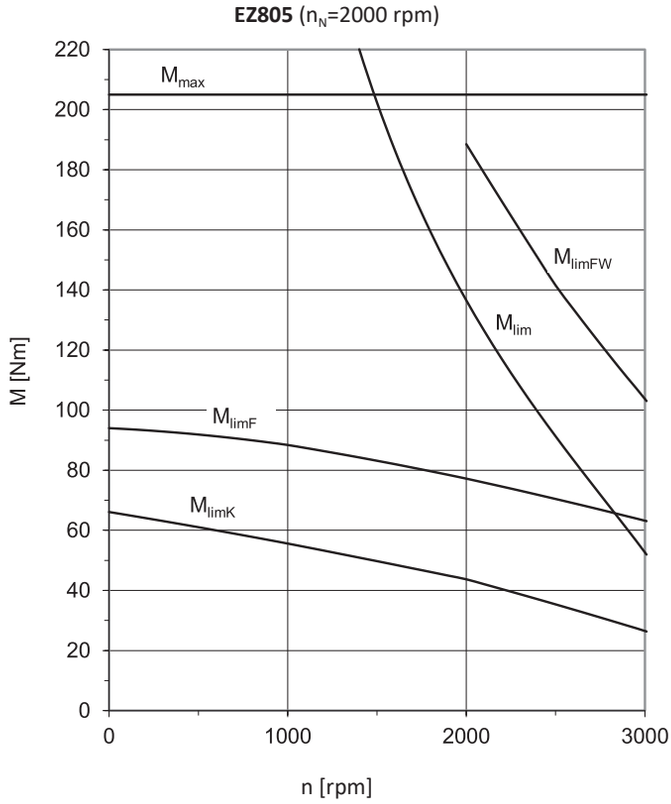

17.4 Dimensional drawings

In this chapter, you can find the dimensions of the motors.

Dimensions can exceed the specifications of ISO 2768-mK due to casting tolerances or accumulation of individual tolerances.

We reserve the right to make dimensional changes due to ongoing technical development.

You can download 3D models of our standard drives at http://configurator.stoeber.de.

In this chapter, the dimensions p1 and w1 for standard motor designs are presented. In designs for connection to drive controllers of third-party manufacturers, dimensions p1 and w1 may differ. You can find more details at http://configurator.stoeber.de.

Tolerances

Solid shaft	Tolerance
Shaft ∅ fit ≤ 50 mm	DIN 748-1, ISO k6
Shaft ∅ fit > 50 mm	DIN 748-1, ISO m6

Centering holes in solid shafts in accordance with DIN 332-2, DR shape

Thread size	M4	M5	M6	M8	M10	M12	M16	M20	M24
Thread depth [mm]	10	12.5	16	19	22	28	36	42	50

17.4.1 EZ3 motors (One Cable Solution)

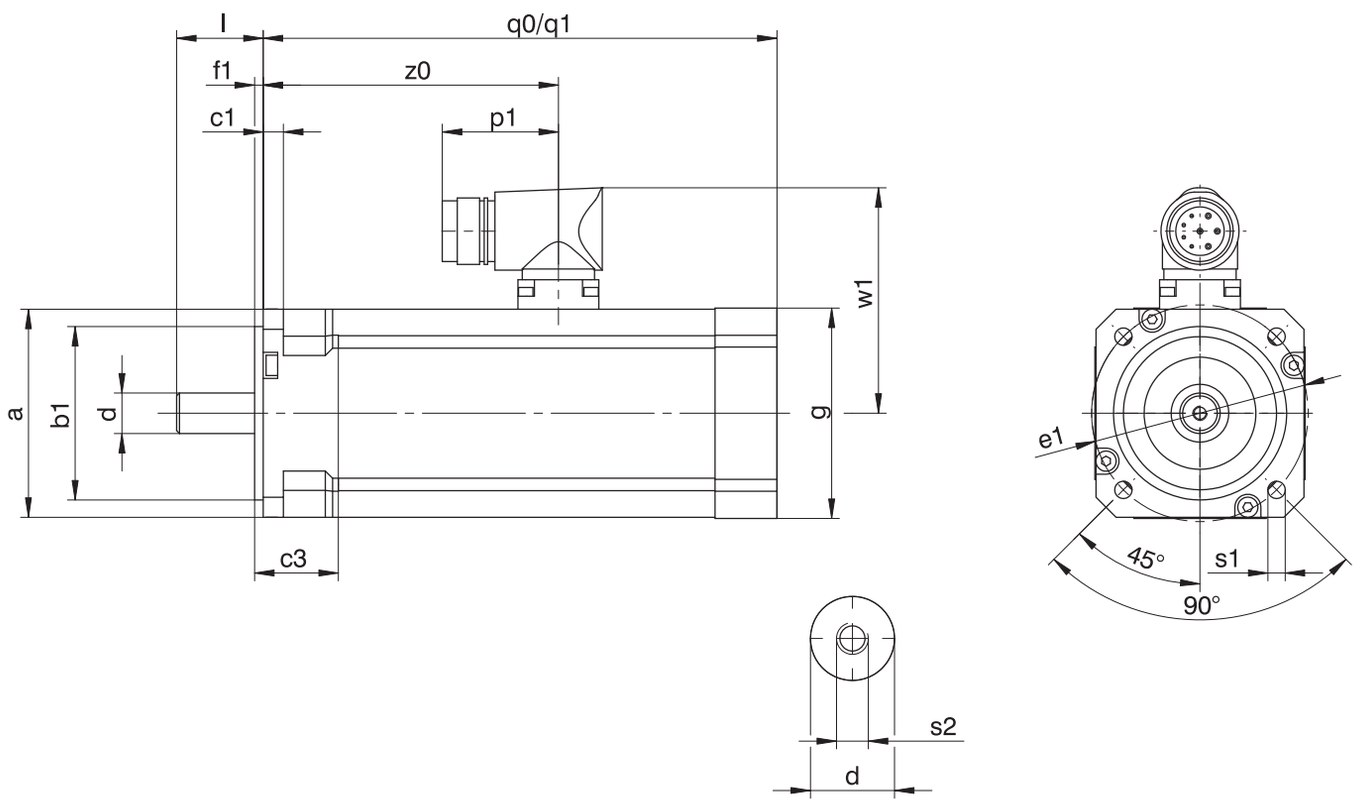

q0 Applies to motors without holding brake

q1 Applies to motors with holding brake

Type	□a	Øb1	c1	c3	Ød	Øe1	f1	□g	l	p1	q0	q1	Øs1	s2	w1	z0
EZ301U	72	60_{j6}	7	26	14_{k6}	75	3	72	30	40	116	156	6	M5	78	80.5
EZ302U	72	60_{j6}	7	26	14_{k6}	75	3	72	30	40	138	178	6	M5	78	102.5
EZ303U	72	60_{j6}	7	26	14_{k6}	75	3	72	30	40	160	200	6	M5	78	124.5

17.4.2 EZ3 motors

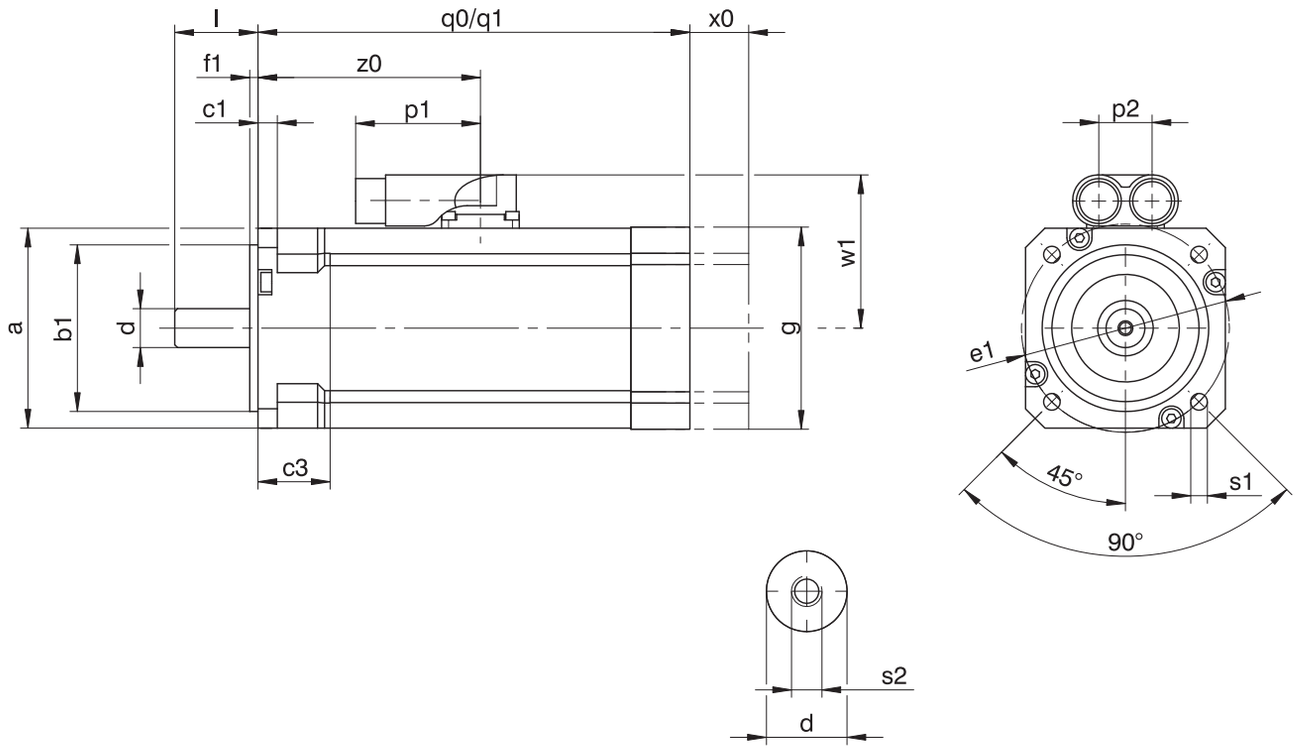

q0	Applies to motors without holding brake	q1	Applies to motors with holding brake
x0	Applies to encoders based on an optical measuring method		

Type	□a	Øb1	c1	c3	Ød	Øe1	f1	□g	l	p1	p2	q0	q1	Øs1	s2	w1	x0	z0
EZ301U	72	60_{j6}	7	26	14_{k6}	75	3	72	30	45	19	116	156	6	M5	55.5	21	80.5
EZ302U	72	60_{j6}	7	26	14_{k6}	75	3	72	30	45	19	138	178	6	M5	55.5	21	102.5
EZ303U	72	60_{j6}	7	26	14_{k6}	75	3	72	30	45	19	160	200	6	M5	55.5	21	124.5

17.4.3 EZ4 – EZ7 motors with convection cooling (One Cable Solution)

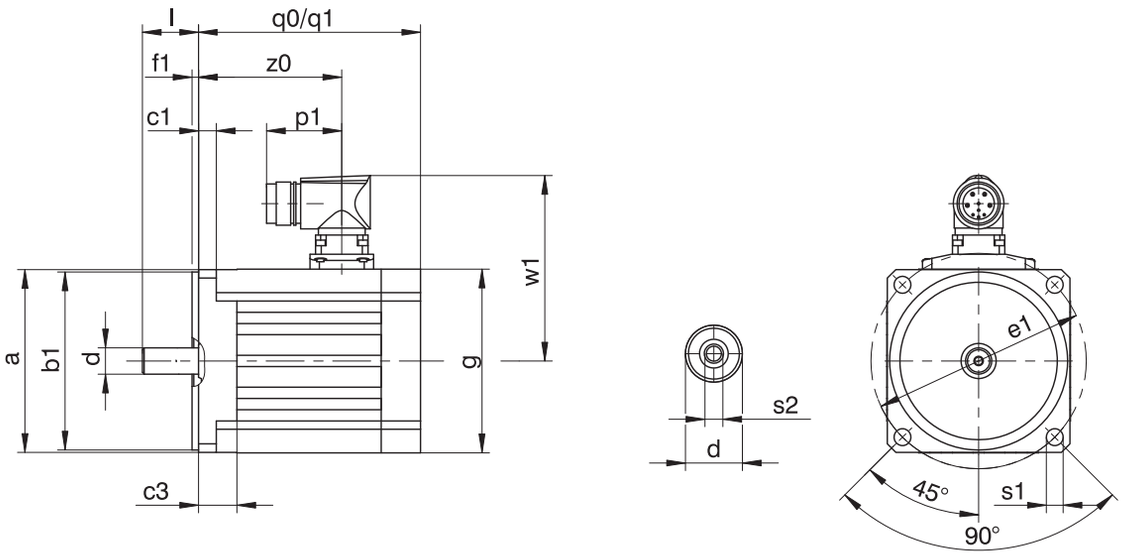

q0 Applies to motors without holding brake

q1 Applies to motors with holding brake

Type	□a	Øb1	c1	c3	Ød	Øe1	f1	□g	l	p1	q0	q1	Øs1	s2	w1	z0
EZ401U	98	95_{j6}	9.5	20.5	14_{k6}	115	3.5	98	30	40	118.5	167.0	9	M5	99	76.5
EZ402U	98	95_{j6}	9.5	20.5	19_{k6}	115	3.5	98	40	40	143.5	192.0	9	M6	99	101.5
EZ404U	98	95_{j6}	9.5	20.5	19_{k6}	115	3.5	98	40	40	193.5	242.0	9	M6	99	151.5
EZ501U	115	110_{j6}	10.0	16.0	19_{k6}	130	3.5	115	40	40	109.0	163.5	9	M6	110	74.5
EZ502U	115	110_{j6}	10.0	16.0	19_{k6}	130	3.5	115	40	40	134.0	188.5	9	M6	110	99.5
EZ503U	115	110_{j6}	10.0	16.0	24_{k6}	130	3.5	115	50	40	159.0	213.5	9	M8	110	124.5
EZ505U	115	110_{j6}	10.0	16.0	24_{k6}	130	3.5	115	50	40	209.0	263.5	9	M8	110	174.5
EZ701U	145	130_{j6}	10.0	19.0	24_{k6}	165	3.5	145	50	40	121.0	180.0	11	M8	125	83.0
EZ702U	145	130_{j6}	10.0	19.0	24_{k6}	165	3.5	145	50	40	146.0	205.0	11	M8	125	108.0
EZ703U	145	130_{j6}	10.0	19.0	24_{k6}	165	3.5	145	50	40	171.0	230.0	11	M8	125	133.0
EZ705U	145	130_{j6}	10.0	19.0	32_{k6}	165	3.5	145	58	40	226.0	285.0	11	M12	125	184.0

17.4.4 EZ4 – EZ8 motors with convection cooling

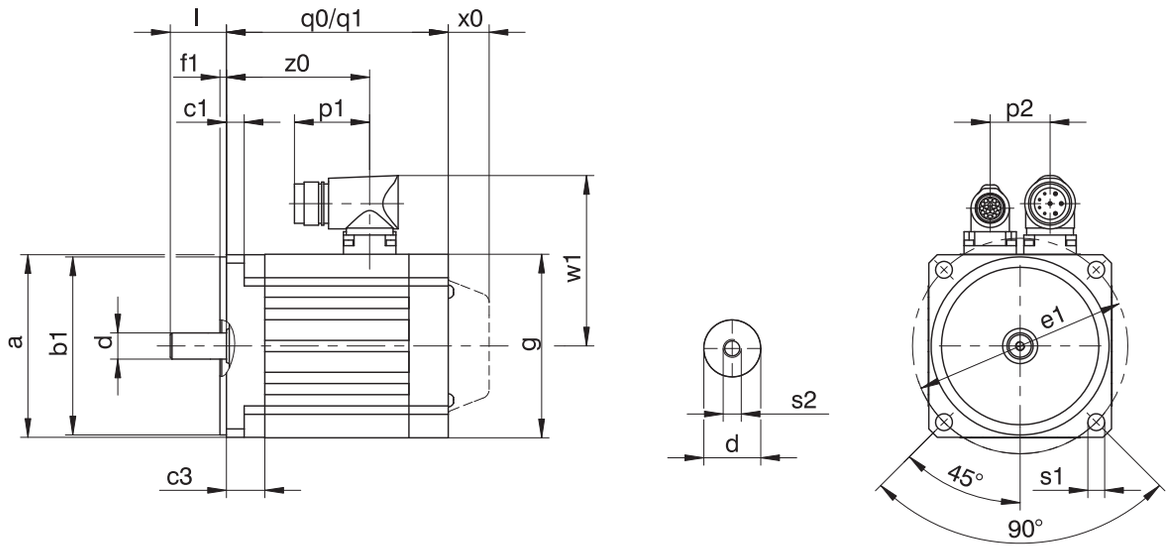

q0	Applies to motors without holding brake	q1	Applies to motors with holding brake
x0	Applies to encoders based on an optical measuring method		

Type	□a	Øb1	c1	c3	Ød	Øe1	f1	□g	l	p1	p2	q0	q1	Øs1	s2	w1	x0	z0
EZ401U	98	95_{j6}	9.5	20.5	14_{k6}	115	3.5	98	30	40	32	118.5	167.0	9	M5	91.0	22	76.5
EZ402U	98	95_{j6}	9.5	20.5	19_{k6}	115	3.5	98	40	40	32	143.5	192.0	9	M6	91.0	22	101.5
EZ404U	98	95_{j6}	9.5	20.5	19_{k6}	115	3.5	98	40	40	32	193.5	242.0	9	M6	91.0	22	151.5
EZ501U	115	110_{j6}	10.0	16.0	19_{k6}	130	3.5	115	40	40	36	109.0	163.5	9	M6	100.0	22	74.5
EZ502U	115	110_{j6}	10.0	16.0	19_{k6}	130	3.5	115	40	40	36	134.0	188.5	9	M6	100.0	22	99.5
EZ503U	115	110_{j6}	10.0	16.0	24_{k6}	130	3.5	115	50	40	36	159.0	213.5	9	M8	100.0	22	124.5
EZ505U	115	110_{j6}	10.0	16.0	24_{k6}	130	3.5	115	50	40	36	209.0	263.5	9	M8	100.0	22	174.5
EZ701U	145	130_{j6}	10.0	19.0	24_{k6}	165	3.5	145	50	40	42	121.0	180.0	11	M8	115.0	22	83.0
EZ702U	145	130_{j6}	10.0	19.0	24_{k6}	165	3.5	145	50	40	42	146.0	205.0	11	M8	115.0	22	108.0
EZ703U	145	130_{j6}	10.0	19.0	24_{k6}	165	3.5	145	50	40	42	171.0	230.0	11	M8	115.0	22	133.0
EZ705U	145	130_{j6}	10.0	19.0	32_{k6}	165	3.5	145	58	71	42	226.0	285.0	11	M12	134.0	22	184.0
EZ802U	190	180_{j6}	15.0	25.0	32_{k6}	215	3.5	190	58	71	60	222.0	299.0	13.5	M12	156.5	22	168.0
EZ803U	190	180_{j6}	15.0	25.0	38_{k6}	215	3.5	190	80	71	60	263.0	340.0	13.5	M12	156.5	22	209.0
EZ805U	190	180_{j6}	15.0	25.0	38_{k6}	215	3.5	190	80	71	60	345.0	422.0	13.5	M12	156.5	22	277.0

17.4.5 EZ4 – EZ7 motors with forced ventilation (One Cable Solution)

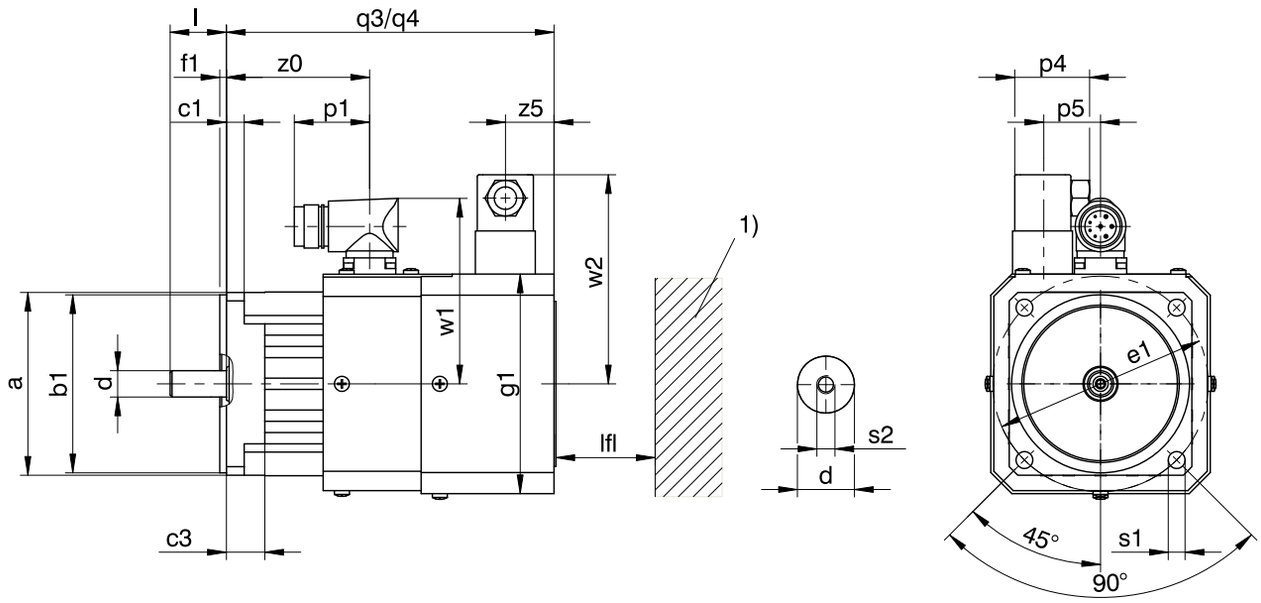

q3 Applies to motors without holding brake

q4 Applies to motors with holding brake

1) Machine wall

Type	□a	Øb1	c1	c3	Ød	Øe1	f1	□g1	l	lfl_{min}	p1	p4	p5	q3	q4	Øs1	s2	w1	w2	z0	z5
EZ401B	98	95_{j6}	9.5	20.5	14_{k6}	115	3.5	118	30	20	40	37.5	0	175	224	9.0	M5	99	111	76.5	25
EZ402B	98	95_{j6}	9.5	20.5	19_{k6}	115	3.5	118	40	20	40	37.5	0	200	249	9.0	M6	99	111	101.5	25
EZ404B	98	95_{j6}	9.5	20.5	19_{k6}	115	3.5	118	40	20	40	37.5	0	250	299	9.0	M6	99	111	151.5	25
EZ501B	115	110_{j6}	10.0	16.0	19_{k6}	130	3.5	135	40	20	40	37.5	0	179	234	9.0	M6	110	120	74.5	25
EZ502B	115	110_{j6}	10.0	16.0	19_{k6}	130	3.5	135	40	20	40	37.5	0	204	259	9.0	M6	110	120	99.5	25
EZ503B	115	110_{j6}	10.0	16.0	24_{k6}	130	3.5	135	50	20	40	37.5	0	229	284	9.0	M8	110	120	124.5	25
EZ505B	115	110_{j6}	10.0	16.0	24_{k6}	130	3.5	135	50	20	40	37.5	0	279	334	9.0	M8	110	120	174.5	25
EZ701B	145	130_{j6}	10.0	19.0	24_{k6}	165	3.5	165	50	30	40	37.5	0	213	272	11.0	M8	125	134	83.0	40
EZ702B	145	130_{j6}	10.0	19.0	24_{k6}	165	3.5	165	50	30	40	37.5	0	238	297	11.0	M8	125	134	108.0	40
EZ703B	145	130_{j6}	10.0	19.0	24_{k6}	165	3.5	165	50	30	40	37.5	0	263	322	11.0	M8	125	134	133.0	40

17.4.6 EZ4 – EZ8 motors with forced ventilation

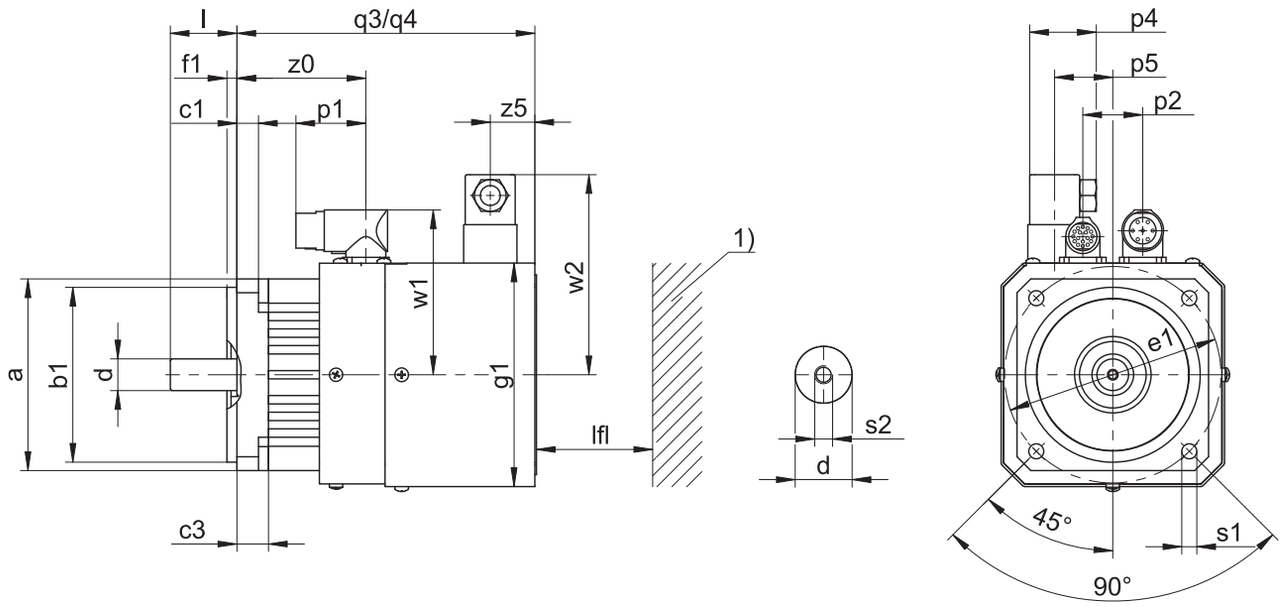

q3 Applies to motors without holding brake

q4 Applies to motors with holding brake

1) Machine wall

Type	□a	Øb1	c1	c3	Ød	Øe1	f1	□g1	l	lfl_{min}	p1	p2	p4	p5	q3	q4	Øs1	s2	w1	w2	z0	z5
EZ401B	98	95_{j6}	9.5	20.5	14_{k6}	115	3.5	118	30	20	40	32	37.5	0	175	224	9.0	M5	91.0	111	76.5	25
EZ402B	98	95_{j6}	9.5	20.5	19_{k6}	115	3.5	118	40	20	40	32	37.5	0	200	249	9.0	M6	91.0	111	101.5	25
EZ404B	98	95_{j6}	9.5	20.5	19_{k6}	115	3.5	118	40	20	40	32	37.5	0	250	299	9.0	M6	91.0	111	151.5	25
EZ501B	115	110_{j6}	10.0	16.0	19_{k6}	130	3.5	135	40	20	40	36	37.5	0	179	234	9.0	M6	100.0	120	74.5	25
EZ502B	115	110_{j6}	10.0	16.0	19_{k6}	130	3.5	135	40	20	40	36	37.5	0	204	259	9.0	M6	100.0	120	99.5	25
EZ503B	115	110_{j6}	10.0	16.0	24_{k6}	130	3.5	135	50	20	40	36	37.5	0	229	284	9.0	M8	100.0	120	124.5	25
EZ505B	115	110_{j6}	10.0	16.0	24_{k6}	130	3.5	135	50	20	40	36	37.5	0	279	334	9.0	M8	100.0	120	174.5	25
EZ701B	145	130_{j6}	10.0	19.0	24_{k6}	165	3.5	165	50	30	40	42	37.5	0	213	272	11.0	M8	115.0	134	83.0	40
EZ702B	145	130_{j6}	10.0	19.0	24_{k6}	165	3.5	165	50	30	40	42	37.5	0	238	297	11.0	M8	115.0	134	108.0	40
EZ703B	145	130_{j6}	10.0	19.0	24_{k6}	165	3.5	165	50	30	40	42	37.5	0	263	322	11.0	M8	115.0	134	133.0	40
EZ705B	145	130_{j6}	10.0	19.0	32_{k6}	165	3.5	165	58	30	71	42	37.5	0	318	377	11.0	M12	134.0	134	184.0	40
EZ802B	190	180_{j6}	15.0	25.0	32_{k6}	215	3.5	215	58	30	71	60	37.5	62	322	399	13.5	M12	156.5	160	168.0	40
EZ803B	190	180_{j6}	15.0	25.0	38_{k6}	215	3.5	215	80	30	71	60	37.5	62	363	440	13.5	M12	156.5	160	209.0	40
EZ805B	190	180_{j6}	15.0	25.0	38_{k6}	215	3.5	215	80	30	71	60	37.5	62	445	522	13.5	M12	178.0	160	277.0	40

17.5 Type designation

Example code

EZ	4	0	1	U	D	BB	Q7	O	096

Explanation

Code	Designation	Design
EZ	Type	Synchronous servo motor
4	Size	4 (example)
0	Generation	0
1	Length	1 (example)
U	Cooling[1]	Convection cooling
B		Forced ventilation
D	Design	Dynamic
BB	Drive controller	SI6 (example)
Q7	Encoder	EnDat 3 EQI 1131 (example)
O	Brake	Without holding brake
P		Permanent magnet holding brake
096	Voltage constant K_{EM}	96 V/1000 rpm (example)

Notes

- In Chapter [▸ 17.6.4], you can find information about available encoders.
- In Chapter [▸ 17.6.4.6], you can find information about connecting synchronous servo motors to other drive controllers from STOBER.
- In Chapter [▸ 21], you can find information about options for connecting STOBER synchronous servo motors to drive controllers from other manufacturers.

17.6 Product description

17.6.1 General features

Feature	Description
Design	IM B5, IM V1, IM V3 in accordance with EN 60034-7
Protection class	IP56 / IP66 (option)
Thermal class	155 (F) in accordance with EN 60034-1 (155 °C, heating Δϑ = 100 K)
Surface	Matte black as per RAL 9005
Cooling	IC 410 convection cooling (IC 416 convection cooling with forced ventilation units, optional)
Bearing	Rolling bearing with lifetime lubrication and non-contact sealing
Sealing	Radial shaft seal rings made of FKM (A side)
Shaft	Shaft without feather key, diameter quality k6
Radial runout	Normal tolerance class in accordance with IEC 60072-1
Concentricity	Normal tolerance class in accordance with IEC 60072-1
Axial runout	Normal tolerance class in accordance with IEC 60072-1
Vibration intensity	A in accordance with EN 60034-14
Noise level	Limit values in accordance with EN 60034-9

[1] EZ3 motors only available with convection cooling

17.6.2 Electrical features

General electrical features of the motor are described in this chapter. Details can be found in the "Selection tables" chapter.

Feature	Description
DC link voltage	DC 540 V (max. 620 V) on STOBER drive controllers
Winding	Three-phase, single-tooth coil design
Circuit	Star, center not led through
Protection class	I (protective grounding) in accordance with EN 61140
Impulse voltage insulation class (IVIC)	C in accordance with DIN EN 60034-18-41 (inverter connection voltage 0 – 480 V ± 10%)
Number of pole pairs	5 (EZ3) 7 (EZ4/EZ5/EZ7) 8 (EZ8)

17.6.3 Ambient conditions

Standard ambient conditions for transport, storage and operation of the motor are described in this chapter. Information about differing ambient conditions can be found in the chapter Derating.

Feature	Description
Surrounding temperature for transport/storage	−30 °C to +85 °C
Surrounding temperature for operation	−15 °C to +40 °C
Relative humidity	5% to 95%, no condensation
Installation altitude	≤ 1000 m above sea level
Shock load	≤ 50 m/s^2 (5 g), 6 ms in accordance with EN 60068-2-27

Notes

- STOBER synchronous servo motors are not suitable for potentially explosive atmospheres.
- Secure the power cables close to the motor so that vibrations of the cable do not place impermissible loads on the motor plug connector.
- Note that the braking torques of the holding brake (optional) may be reduced by shock loading.
- At operating temperatures below 0 °C, note that the discs of the holding brake (optional) may ice up.
- Also take into consideration the shock load of the motor due to output units (such as gear units and pumps) which are coupled with the motor.

17.6.4 Encoders

STOBER synchronous servo motors can be designed with different encoder models. The following chapters include information for choosing the optimal encoder for your application.

17.6.4.1 Encoder measuring method selection tool

The following table offers a selection tool for an encoder measuring method that is optimally suited for your application.

Feature	Absolute encoder		Resolver
Measuring method	Optical	Inductive	Electromagnetic
Temperature resistance	★★☆	★★★	★★★
Vibration strength and shock resistance	★★☆	★★★	★★★
System accuracy	★★★	★★☆	★☆☆
FMA version with fault exclusion for mechanical coupling (option with EnDat interface)	✓	✓	–
Elimination of referencing with multi-turn design (optional)	✓	✓	–
Simple commissioning with electronic nameplate	✓	✓	–
Key: ★☆☆ = satisfactory, ★★☆ = good, ★★★ = very good			

17.6.4.2 Selection tool for EnDat interface

The following table offers a selection tool for the EnDat interface of absolute encoders.

Feature	EnDat 2.1	EnDat 2.2	EnDat 3
Short cycle times	★★☆	★★★	★★★
Transfer of additional information along with the position value	–	✓	✓
Expanded power supply range	★★☆	★★★	★★★
One Cable Solution (OCS)	–	–	✓
Key: ★★☆ = good, ★★★ = very good			

17.6.4.3 EnDat 3 encoders

EnDat 3 is a robust, purely digital protocol that functions with minimal connection lines. EnDat 3 facilitates the One Cable Solution, which allows the connection lines between the encoder and drive controller to be routed along in the motor's power cable.

The One Cable Solution offers the following advantages:

- Significantly reduced wiring effort by eliminating the encoder cable
- For cable lengths up to 50 m, a choke between the drive controller and motor is not necessary
- Advanced safety functions possible (up to SIL2 / category 3, PLd)
- Significantly reduced space requirements by eliminating the encoder plug connector
- Transmission of measured values from the temperature sensor using the EnDat 3 protocol

A motor with the EnDat 3 encoder can be operated only on a SI6 or SC6 drive controller from STOBER.

The EnDat 3 encoder has the following features:

Encoder model	Code	Measuring method	Recordable revolutions	Resolution	Position values per revolution
EnDat 3 EQI 1131	Q7	Inductive	4096	19 bit	524288

17.6.4.4 EnDat 2 encoders

In this chapter, you can find detailed technical data for encoder models that can be selected with EnDat interface.

Encoders with EnDat 2.2 interface

Encoder model	Code	Measuring method	Recordable revolutions	Resolution	Position values per revolution
EnDat 2.2 EQI 1131	Q6	Inductive	4096	19 bit	524288
EnDat 2.2 EBI 1135	B0	Inductive	65536	18 bit	262144
EnDat 2.2 EQN 1135 FMA	M3	Optical	4096	23 bit	8388608
EnDat 2.2 EQN 1135	Q5	Optical	4096	23 bit	8388608
EnDat 2.2 ECN 1123 FMA	M1	Optical	–	23 bit	8388608
EnDat 2.2 ECN 1123	C7	Optical	–	23 bit	8388608
EnDat 2.2 ECI 1118-G2	C5	Inductive	–	18 bit	262144

Encoders with EnDat 2.1 interface

Encoder model	Code	Measuring method	Recordable revolutions	Resolution	Position values per revolution	Periods per revolution
EnDat 2.1 EQN 1125 FMA	M2	Optical	4096	13 bit	8192	Sin/Cos 512
EnDat 2.1 EQN 1125	Q4	Optical	4096	13 bit	8192	Sin/Cos 512
EnDat 2.1 ECN 1113 FMA	M0	Optical	–	13 bit	8192	Sin/Cos 512
EnDat 2.1 ECN 1113	C6	Optical	–	13 bit	8192	Sin/Cos 512

Notes

- The encoder code is a part of the type designation of the motor.
- FMA = Version with fault exclusion for mechanical coupling.
- The EnDat 2.2 EBI 1135 encoder requires an external buffer battery so that absolute position information is retained after the power supply is turned off (AES option for STOBER drive controllers).
- Multiple revolutions of the motor shaft can be recorded only using multi-turn encoders.

17.6.4.5 Resolver

In this chapter, you can find detailed technical data for the resolver that can be installed as an encoder in a STOBER synchronous servo motor.

Feature	Description
Number of poles	2
Input voltage U_{1eff}	7 V ± 5%
Input frequency f_1	10 kHz
Output voltage $U_{2,S1–S3}$	$K_{tr} \cdot U_{R1–R2} \cdot \cos \theta$
Output voltage $U_{2,S2–S4}$	$K_{tr} \cdot U_{R1–R2} \cdot \sin \theta$
Transformation ratio K_{tr}	0.5 ± 5%
Electrical fault	±10 arcmin

17.6.4.6 Possible combinations with drive controllers

The following table shows the options for combining STOBER drive controllers with selectable encoder models.

Drive controller		SDS 5000		SD6		SI6			SC6		
Drive controller code		AA	AC	AD	AE	AP	AQ	**BB**	AU	AV	**BA**
Connection plan ID		442305	442307	442450	442451	442771	442772	**443175**	443052	443053	**443174**
Encoder	Encoder code										
EnDat 3 EQI 1131	Q7	–	–	–	–	–	–	✓	–	–	✓
EnDat 2.2 EQI 1131	Q6	✓	–	✓	–	✓	–	–	✓	–	–
EnDat 2.2 EQN 1135 FMA	M3	✓	–	✓	–	–	–	–	–	–	–
EnDat 2.2 EQN 1135	Q5	✓	–	✓	–	✓	–	–	✓	–	–
EnDat 2.2 ECN 1123 FMA	M1	✓	–	✓	–	–	–	–	–	–	–
EnDat 2.2 ECN 1123	C7	✓	–	✓	–	✓	–	–	✓	–	–
EnDat 2.2 ECI 1118-G2	C5	✓	–	✓	–	✓	–	–	✓	–	–
EnDat 2.1 EQN 1125 FMA	M2	✓	✓	✓	✓	–	–	–	–	–	–
EnDat 2.1 EQN 1125	Q4	✓	✓	✓	✓	–	–	–	–	–	–
EnDat 2.1 ECN 1113 FMA	M0	✓	✓	✓	✓	–	–	–	–	–	–
EnDat 2.1 ECN 1113	C6	✓	✓	✓	✓	–	–	–	–	–	–
Resolver	R0	✓	–	–	✓	–	✓	–	–	✓	–

Notes

- The drive controller and encoder codes are a part of the type designation of the motor (see the "Type designation" chapter).
- In Chapter [▸ 21], you can find information about options for connecting STOBER synchronous servo motors to drive controllers from other manufacturers.

17.6.5 Temperature sensor

In this chapter, you can find technical data for the temperature sensors that are installed in STOBER synchronous servo motors for implementing thermal winding protection. To prevent damage to the motor, always monitor the temperature sensor with appropriate devices that will turn off the motor if the maximum permitted winding temperature is exceeded.

Some encoders feature integrated temperature monitoring, the warning and switch-off thresholds of which may overlap with the corresponding values set for the temperature sensor in the drive controller. In some cases, this may result in an instance where an encoder with internal temperature monitoring forces the motor to shut down, even before the motor has reached its nominal data.

You can find information about the electrical connection of the temperature sensor in the "Connection method" chapter.

17.6.5.1 PTC thermistor

The PTC thermistor is installed as a standard temperature sensor in STOBER synchronous servo motors.

The PTC thermistor is a triple thermistor in accordance with DIN 44082 that can be used for monitoring the temperature of each winding phase. The resistance values in the following table and curve refer to a single thermistor in accordance with DIN 44081. These values must be multiplied by 3 for a triple thermistor in accordance with DIN 44082.

Feature	Description
Nominal response temperature ϑ_{NAT}	145 °C ± 5 K
Resistance R −20 °C up to ϑ_{NAT} − 20 K	≤ 250 Ω
Resistance R with ϑ_{NAT} − 5 K	≤ 550 Ω
Resistance R with ϑ_{NAT} + 5 K	≥ 1330 Ω
Resistance R with ϑ_{NAT} + 15 K	≥ 4000 Ω
Operating voltage	≤ DC 7.5 V
Thermal response time	< 5 s
Thermal class	155 (F) in accordance with EN 60034-1 (155 °C, heating Δϑ = 100 K)

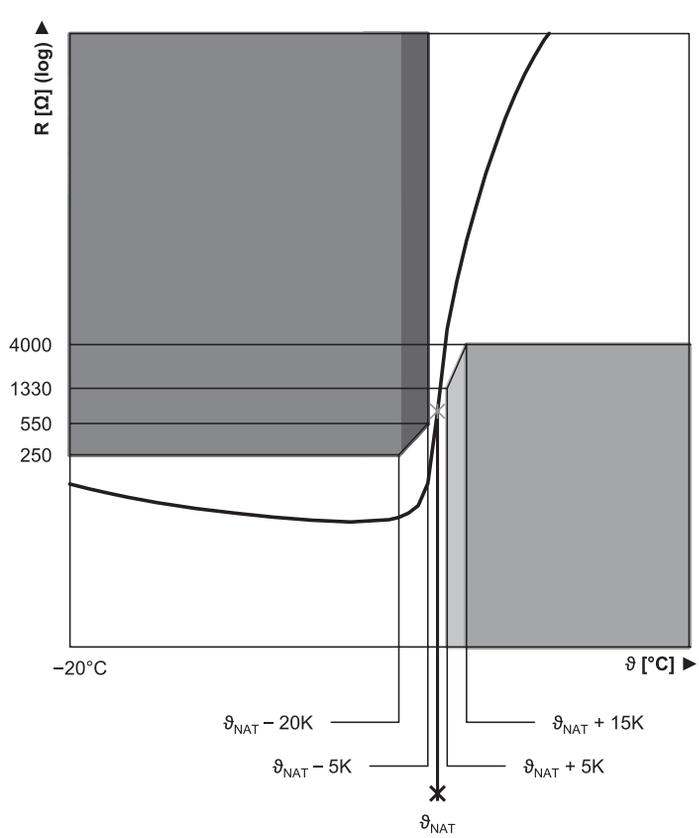

Fig. 2: PTC thermistor curve (single thermistor)

17.6.5.2 Pt1000 temperature sensor

STOBER synchronous servo motors are available in versions with a Pt1000 temperature sensor. The Pt1000 is a temperature-dependent resistor that has a resistance curve with a linear relationship with temperature. As a result, the Pt1000 allows for measurements of the winding temperature. These measurements are limited to one phase of the motor winding, however. In order to adequately protect the motor from exceeding the maximum permitted winding temperature, use a i^2t model in the drive controller to monitor the winding temperature.

Pt1000 temperature sensors can also be used with the One Cable Solution.

Avoid exceeding the specified measurement current so that the measured values are not falsified due to self-heating of the temperature sensor.

Feature	Description
Measurement current (constant)	2 mA
Resistance R for ϑ = 0 °C	1000 Ω
Resistance R for ϑ = 80 °C	1300 Ω
Resistance R for ϑ = 150 °C	1570 Ω

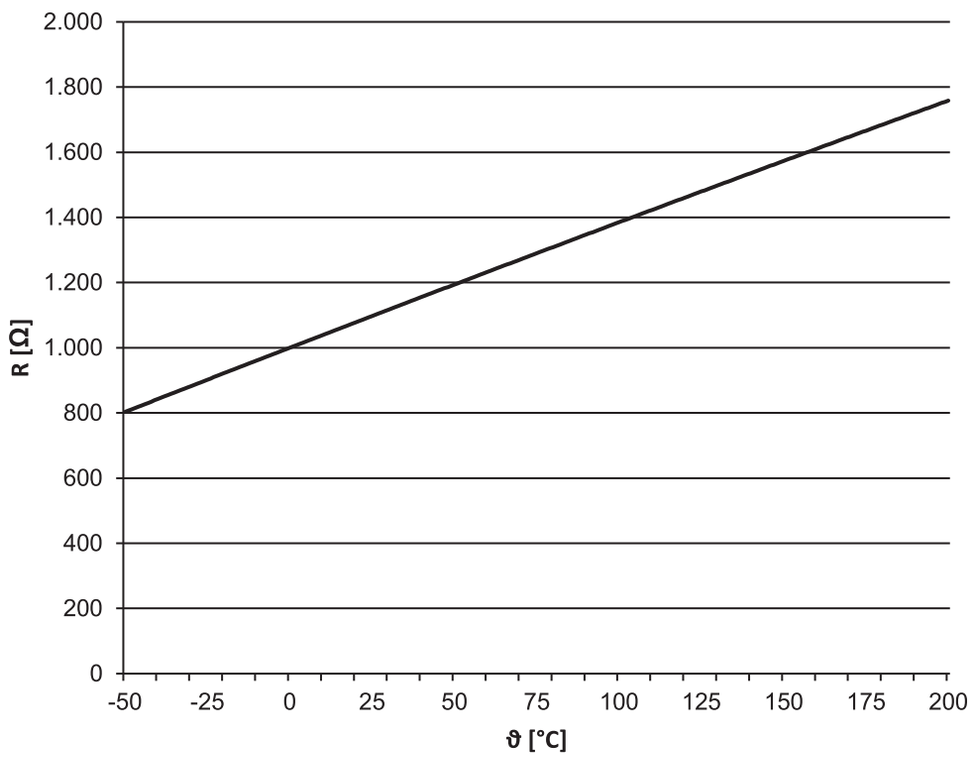

Fig. 3: Pt1000 temperature sensor characteristic curve

17.6.6 Cooling

A synchronous servo motor in the standard version is cooled by convection cooling (IC 410 in accordance with EN 60034-6). Optionally, forced ventilation can be used to cool the motor.

17.6.6.1 Forced ventilation

STOBER synchronous servo motors offer the option of being cooled with forced ventilation in order to increase performance data while maintaining the same size. Retrofitting with a forced ventilation unit is also possible in order to optimize the drive at a later date. When retrofitting, check whether the conductor cross-section of the power cable of the motor must be increased. Also take into account the dimensions of the forced ventilation unit.

The performance data for motors with forced ventilation can be found in the chapter Selection tables and the dimensions in the chapter Dimensional drawings.

Technical data

Motor	Forced ventilation unit	$U_{N,F}$ [V]	$I_{N,F}$ [A]	$P_{N,F}$ [W]	q_{vF} [m³/h]	$L_{p(A)}$ [dBA]	m_F [kg]	Protection class
EZ4_B	FL4	230 V ± 5%, 50/60 Hz	0.07	10	59	41	1.4	IP44
EZ5_B	FL5		0.10	14	160	45	1.9	IP54
EZ7_B	FL7		0.10	14	160	45	2.9	IP54
EZ8_B	FL8		0.20	26	420	54	5.0	IP55

Terminal assignment for forced ventilation unit plug connectors

Connection diagram	Pin	Connection
	1	L1 (phase)
	2	N (neutral conductor)
	3	
	⏚	Grounding conductor

17.6.7 Holding brake

STOBER synchronous servo motors can be equipped with a backlash-free holding brake using permanent magnets in order to secure the motor shaft when at a standstill. The holding brake engages automatically if the voltage drops.

The holding brake is designed for a high number of operations (B_{10} = 10 million operations, B_{10d} = 20 million operations).

Nominal voltage of permanent magnet holding brake: DC 24 V ± 5%, smoothed.

Observe the following during project configuration:

- The holding brake is designed to keep the motor shaft from moving. Activate braking processes during operation using the corresponding electrical functions of the drive controller. In exceptional circumstances, the holding brake can be used for braking from full speed (following a power failure or when setting up the machine). The maximum permitted work done by friction $W_{B,Rmax/h}$ may not be exceeded.
- Note that the braking torque M_{Bdyn} may initially be up to 50% less when braking from full speed. As a result, the braking effect has a delayed action and braking distances become longer.
- Regularly perform a brake test to ensure the functional safety of the brakes. Details can be found in the documentation of the motor and the drive controller.
- Connect a varistor of type S14 K35 (or comparable) in parallel to the brake coil to protect your machine from switching surges. (Not necessary for connecting the holding brake to STOBER drive controllers of the 5th and 6th generation with a BRS/BRM brake module).
- The holding brake of the motor does not offer adequate safety for persons in the hazardous area of gravity-loaded vertical axes. Therefore take additional measures to minimize risk, e.g. by providing a mechanical substructure for maintenance work.
- Take into consideration voltage losses in the connection cables that connect the voltage source to the holding brake connections.
- The holding torque of the brake can be reduced by shock loading. Information about shock loading can be found in the "Ambient conditions" chapter.
- At operating temperatures from −15 °C to 0 °C, a cold holding brake in the released state may cause operating noises. As the temperature of the holding brake increases, these noises decrease such that operating noises are not heard when using holding brake at operating temperature in the released state.

Calculation of work done by friction per braking process

$$W_{B,R/B} = \frac{J_{tot} \cdot n^2}{182.4} \cdot \frac{M_{Bdyn}}{M_{Bdyn} \pm M_L}, \; M_{Bdyn} > M_L$$

The sign of M_L is positive if the movement runs vertically upwards or horizontally and it is negative if the movement runs vertically down.

Calculation of the stop time

$$t_{dec} = 2.66 \cdot t_{1B} + \frac{n \cdot J_{tot}}{9.55 \cdot M_{Bdyn}}$$

Switching behavior

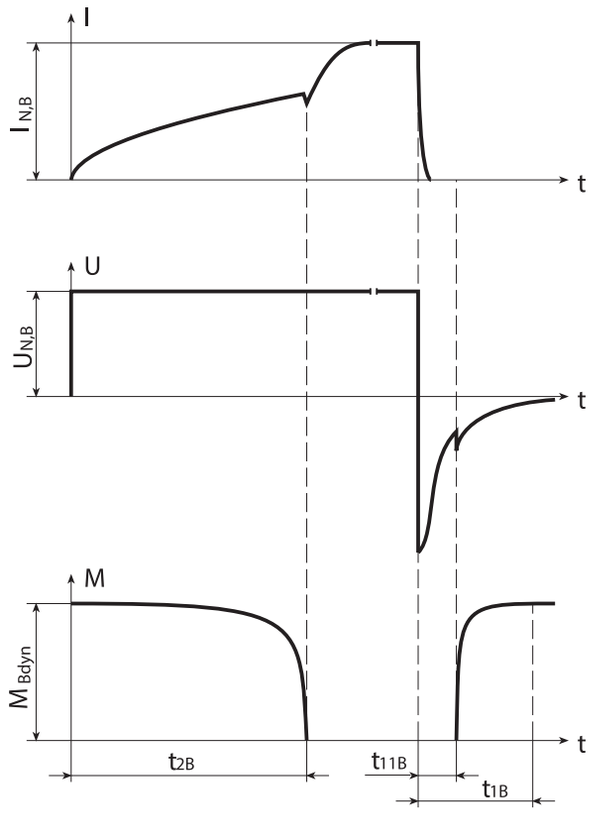

Fig. 4: Holding brake – Switching behavior

Technical data

Type	M_{Bstat} [Nm]	M_{Bdyn} [Nm]	$I_{N,B}$ [A]	$W_{B,Rmax/h}$ [kJ/h]	N_{Bstop}	J_{Bstop} [kgcm²]	$W_{B,Rlim}$ [kJ]	t_{2B} [ms]	t_{11B} [ms]	t_{1B} [ms]	$x_{B,N}$ [mm]	ΔJ_B [kgcm²]	Δm_B [kg]
EZ301	2.5	2.3	0.51	6.0	48000	0.752	180	25	3.0	20	0.2	0.186	0.55
EZ302	4.0	3.8	0.50	8.5	38000	0.952	180	44	4.0	26	0.3	0.186	0.55
EZ303	4.0	3.8	0.50	8.5	30000	1.17	180	44	4.0	26	0.3	0.186	0.55
EZ401	4.0	3.8	0.50	8.5	16000	2.24	180	44	4.0	26	0.3	0.192	0.76
EZ402	8.0	7.0	0.75	8.5	13500	4.39	300	40	2.0	20	0.3	0.566	0.97
EZ404	8.0	7.0	0.75	8.5	8500	7.09	300	40	2.0	20	0.3	0.566	0.97
EZ501	8.0	7.0	0.75	8.5	8700	6.94	300	40	2.0	20	0.3	0.571	1.19
EZ502	8.0	7.0	0.80	8.5	5200	11.5	300	40	2.0	20	0.3	0.571	1.19
EZ503	15	12	1.0	11.0	5900	18.6	550	60	5.0	30	0.3	1.721	1.62
EZ505	15	12	1.0	11.0	4000	27.8	550	60	5.0	30	0.3	1.721	1.62
EZ701	15	12	1.0	11.0	5400	20.5	550	60	5.0	30	0.3	1.743	1.94
EZ702	15	12	1.0	11.0	3600	30.9	550	60	5.0	30	0.3	1.743	1.94
EZ703	32	28	1.1	25.0	5200	54.6	1400	100	5.0	25	0.4	5.680	2.81
EZ705	32	28	1.1	25.0	3500	79.4	1400	100	5.0	25	0.4	5.680	2.81
EZ802	65	35	1.7	45.0	6000	149	2250	200	10	50	0.4	16.460	5.40
EZ803	65	35	1.7	45.0	4500	200	2250	200	10	50	0.4	16.460	5.40
EZ805	115	70	2.1	65.0	7000	376	6500	190	12	65	0.5	55.460	8.40

17.6.8 Connection method

The following chapters describe the connection technology of STOBER synchronous servo motors in the standard version on STOBER drive controllers. You can find further information relating to the drive controller type that was specified in your order in the connection plan that is delivered with every synchronous servo motor.

In Chapter [▸ 21], you can find information about options for connecting STOBER synchronous servo motors to drive controllers from other manufacturers.

17.6.8.1 Connection of the motor housing to the grounding conductor system

Connect the motor housing to the grounding conductor system of the machine in order to prevent personal injury and faulty triggering of residual current protective devices.

All attachment parts required for the connection of the grounding conductor to the motor housing are delivered with the motor. The grounding screw of the motor is identified with the symbol ⏚ in accordance with IEC 60417-DB. The cross-section of the grounding conductor has to be at least as large as the cross-section of the lines in the power connection.

17.6.8.2 Plug connectors (One Cable Solution)

In the One Cable Solution design, the power and encoder lines are connected using a shared plug connector.

For motors with forced ventilation, avoid collisions between the motor connection cables and the plug connector of the forced ventilation unit. In the event of a collision, turn the motor plug connectors accordingly. Details regarding the position of the plug connector for the forced ventilation unit can be found in the "Dimensional drawings" chapter.

The figures represent the position of the plug connectors upon delivery.

Turning ranges of plug connectors (EZ3 motors)

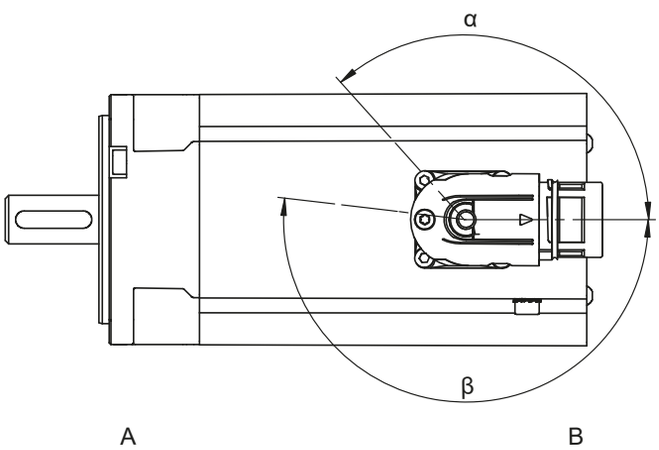

A	Attachment or output side of the motor	B	Rear side of the motor

Turning ranges of plug connectors (EZ4 – EZ7 motors)

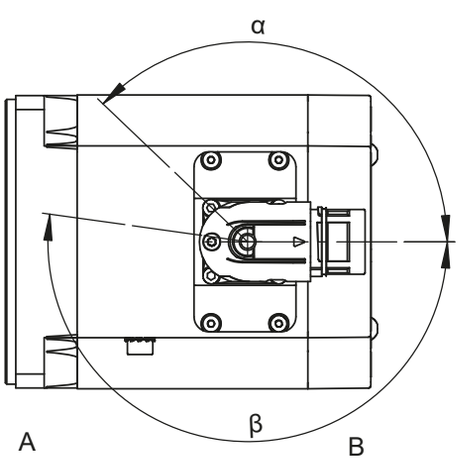

A	Attachment or output side of the motor	B	Rear side of the motor

Plug connector features

Motor type	Size	Connection	Turning range	
			α	β
EZ3 – EZ5, EZ701 – EZ703, EZ705U	con.23	Quick lock	130°	190°

Notes

- The number after "con." indicates the approximate external thread diameter of the plug connector in mm (for example, con.23 designates a plug connector with an external thread diameter of about 23 mm).

17.6.8.3 Plug connectors

STOBER synchronous servo motors are equipped with rotatable quick-lock plug connectors in the standard version (except for plug connector size con.58). Details can be found in this chapter.

For motors with forced ventilation, avoid collisions between the motor connection cables and the plug connector of the forced ventilation unit. In the event of a collision, turn the motor plug connectors accordingly. Details regarding the position of the plug connector for the forced ventilation unit can be found in the "Dimensional drawings" chapter.

The figures represent the position of the plug connectors upon delivery.

Turning ranges of plug connectors (EZ3 motors)

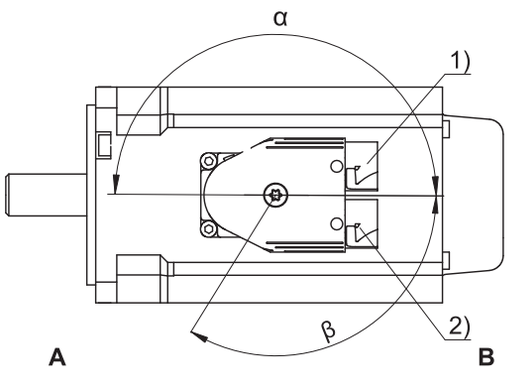

1	Power plug connector	2	Encoder plug connector
A	Attachment or output side of the motor	B	Rear side of the motor

Turning ranges of plug connectors (EZ4 – EZ8 motors)

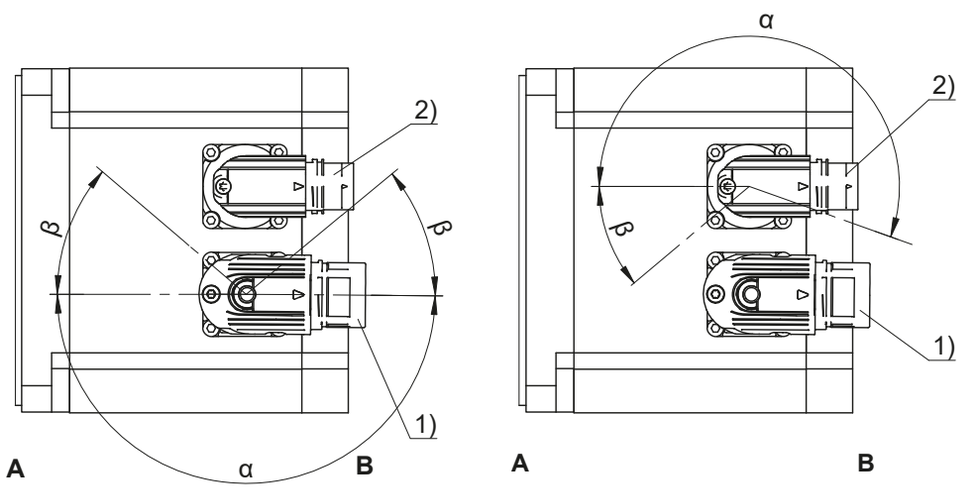

1	Power plug connector	2	Encoder plug connector
A	Attachment or output side of the motor	B	Rear side of the motor

Power plug connector features

Motor type	Size	Connection	Turning range	
			α	β
EZ3	con.15	Quick lock	180°	140°
EZ4, EZ5, EZ701, EZ702, EZ703	con.23	Quick lock	180°	40°
EZ705, EZ802, EZ803, EZ805U	con.40	Quick lock	180°	40°
EZ805B	con.58	Screw thread[2]	0°	0°

[2] Specify alignment on side A or B in the order.

Encoder plug connector features

Motor type	Size	Connection	Turning range	
			α	β
EZ3	con.15	Quick lock	180°	140°
EZ4, EZ5, EZ7, EZ802, EZ803, EZ805U	con.17	Quick lock	195°	35°
EZ805B	con.17	Quick lock	180°	0°

Notes

- The number after "con." indicates the approximate external thread diameter of the plug connector in mm (for example, con.23 designates a plug connector with an external thread diameter of about 23 mm).
- In turning range β, the power or encoder plug connectors can be turned only if doing so does not cause them to collide.
- For the EZ3 motor, the power and encoder plug connectors are mechanically connected and can only be turned together.

17.6.8.4 Terminal assignment for plug connectors (One Cable Solution)

In the One Cable Solution design, the power and encoder lines are connected using a shared plug connector.

The temperature sensor of the motor is connected to the encoder internally. The measured values from the temperature sensor are transmitted via the EnDat 3 protocol of the encoder.

Plug connector size con.23

Connection diagram	Pin	Connection	Color
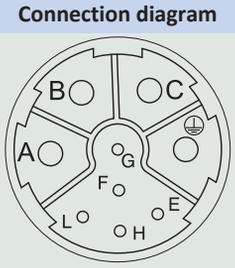	A	U phase	BK
	B	V phase	BU
	C	W phase	RD
	E	P_SD –	YE
	F		
	G	Brake +	
	H	P_SD +	VT
	L	Brake –	
	⏚	Grounding conductor	GNYE

17.6.8.5 Connection assignment of the power plug connector

The size and connection plan of the power plug connector depend on the size of the motor. The colors of the connecting wires inside the motor are specified in accordance with IEC 60757.

Plug connector size con.15

Connection diagram	Pin	Connection	Color
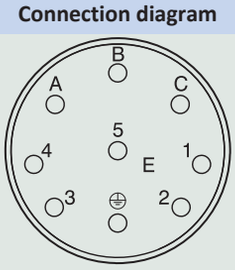	A	U phase	BK
	B	V phase	BU
	C	W phase	RD
	1	Temperature sensor +	
	2	Temperature sensor –	
	3	Brake +	RD
	4	Brake –	BK
	⏚	Grounding conductor	GNYE

Plug connector size con.23

Connection diagram	Pin	Connection	Color
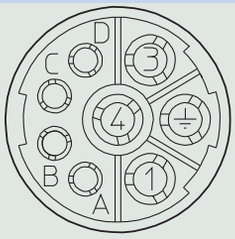	1	U phase	BK
	3	V phase	BU
	4	W phase	RD
	A	Brake +	RD
	B	Brake –	BK
	C	Temperature sensor +	
	D	Temperature sensor –	
	⏚	Grounding conductor	GNYE

Plug connector size con.40 (1.5)

Connection diagram	Pin	Connection	Color
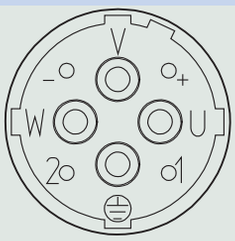	U	U phase	BK
	V	V phase	BU
	W	W phase	RD
	+	Brake +	RD
	–	Brake –	BK
	1	Temperature sensor +	
	2	Temperature sensor –	
	⏚	Grounding conductor	GNYE

Plug connector size con.58 (3)

Connection diagram	Pin	Connection	Color
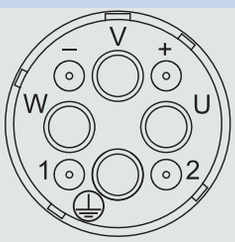	U	U phase	BK
	V	V phase	BU
	W	W phase	RD
	+	Brake +	RD
	–	Brake –	BK
	1	Temperature sensor +	
	2	Temperature sensor –	
	⏚	Grounding conductor	GNYE

17.6.8.6 Connection assignment of the encoder plug connector

The size and connection assignment of the encoder plug connectors depend on the model of encoder installed and the size of the motor.

EnDat 2.1/2.2 digital encoders, plug connector size con.15

Connection diagram	Pin	Connection	Color
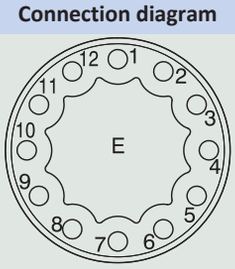	1	Clock +	VT
	2	Up sense	BNGN
	3		
	4		
	5	Data –	PK
	6	Data +	GY
	7		
	8	Clock –	YE
	9		
	10	0 V GND	WHGN
	11		
	12	Up +	BNGN

EnDat 2.1/2.2 digital encoders, plug connector size con.17

Connection diagram	Pin	Connection	Color
	1	Clock +	VT
	2	Up sense	BNGN
	3		
	4		
	5	Data –	PK
	6	Data +	GY
	7		
	8	Clock –	YE
	9		
	10	0 V GND	WHGN
	11		
	12	Up +	BNGN

EnDat 2.2 digital encoder with battery buffering, plug connector size con.15

Connection diagram	Pin	Connection	Color
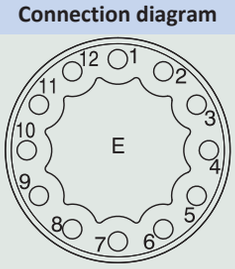	1	Clock +	VT
	2	UBatt +	BU
	3	UBatt –	WH
	4		
	5	Data –	PK
	6	Data +	GY
	7		
	8	Clock –	YE
	9		
	10	0 V GND	WHGN
	11		
	12	Up +	BNGN
	UBatt+ = DC 3.6 V for encoder model EBI in combination with the AES option of STOBER drive controllers		

EnDat 2.2 digital encoder with battery buffering, plug connector size con.17

Connection diagram	Pin	Connection	Color
	1	Clock +	VT
	2	UBatt +	BU
	3	UBatt –	WH
	4		
	5	Data –	PK
	6	Data +	GY
	7		
	8	Clock –	YE
	9		
	10	0 V GND	WHGN
	11		
	12	Up +	BNGN
	UBatt+ = DC 3.6 V for encoder model EBI in combination with the AES option of STOBER drive controllers		

EnDat 2.1 encoder with sin/cos incremental signals, plug connector size con.15

Connection diagram	Pin	Connection	Color
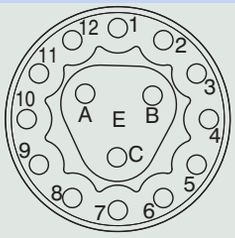	1	Up sense	BU
	2	0 V sense	WH
	3	Up +	BNGN
	4	Clock +	VT
	5	Clock –	YE
	6	0 V GND	WHGN
	7	B + (Sin +)	BUBK
	8	B – (Sin –)	RDBK
	9	Data +	GY
	10	A + (Cos +)	GNBK
	11	A – (Cos –)	YEBK
	12	Data –	PK
	A		
	B		
	C		

EnDat 2.1 encoder with sin/cos incremental signals, plug connector size con.17

Connection diagram	Pin	Connection	Color
	1	Up sense	BU
	2		
	3		
	4	0 V sense	WH
	5		
	6		
	7	Up +	BNGN
	8	Clock +	VT
	9	Clock –	YE
	10	0 V GND	WHGN
	11		
	12	B + (Sin +)	BUBK
	13	B – (Sin –)	RDBK
	14	Data +	GY
	15	A + (Cos +)	GNBK
	16	A – (Cos –)	YEBK
	17	Data –	PK

Resolver, plug connector size con.15

Connection diagram	Pin	Connection	Color
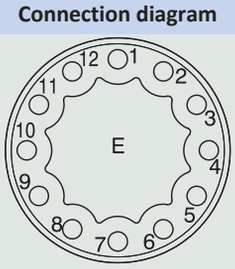	1	S3 Cos +	BK
	2	S1 Cos –	RD
	3	S4 Sin +	BU
	4	S2 Sin –	YE
	5		
	6		
	7	R2 Ref +	YEWH/BKWH[3]
	8	R1 Ref –	RDWH
	9		
	10		
	11		
	12		

[3] (depending on the brand of the resolver)

Resolver, plug connector size con.17

Connection diagram	Pin	Connection	Color
	1	S3 Cos +	BK
	2	S1 Cos –	RD
	3	S4 Sin +	BU
	4	S2 Sin –	YE
	5		
	6		
	7	R2 Ref +	YEWH/BKWH[4]
	8	R1 Ref –	RDWH
	9		
	10		
	11		
	12		

17.7 Project configuration

Project your drives using our SERVOsoft designing software. Download SERVOsoft for free at https://www.stoeber.de/en/ServoSoft.

Observe the limit conditions in this chapter to ensure a safe design for your drives.

An explanation of the formula symbols can be found in Chapter [▸ 23.1].

The formula symbols for values actually present in the application are marked with *.

[4] (depending on the brand of the resolver)

17.7.1 Calculation of the operating point

In this chapter, you can find information needed to calculate the operating point.

Check the following conditions for operating points other than the nominal point M_N specified in the selection tables:

$n_{m*} \leq n_N$

$M_{eff*} \leq M_{limK}$ and $M_{eff*} \leq M_{limF}$

$M_{max*} < M_{max}$

The values for M_N, n_N, M_{max} can be found in the selection tables.

The values for M_{limK} and M_{limF} can be found in the torque/speed curves.

Example of cyclic operation

The following calculations refer to a representation of the power delivered at the motor shaft based on the following example:

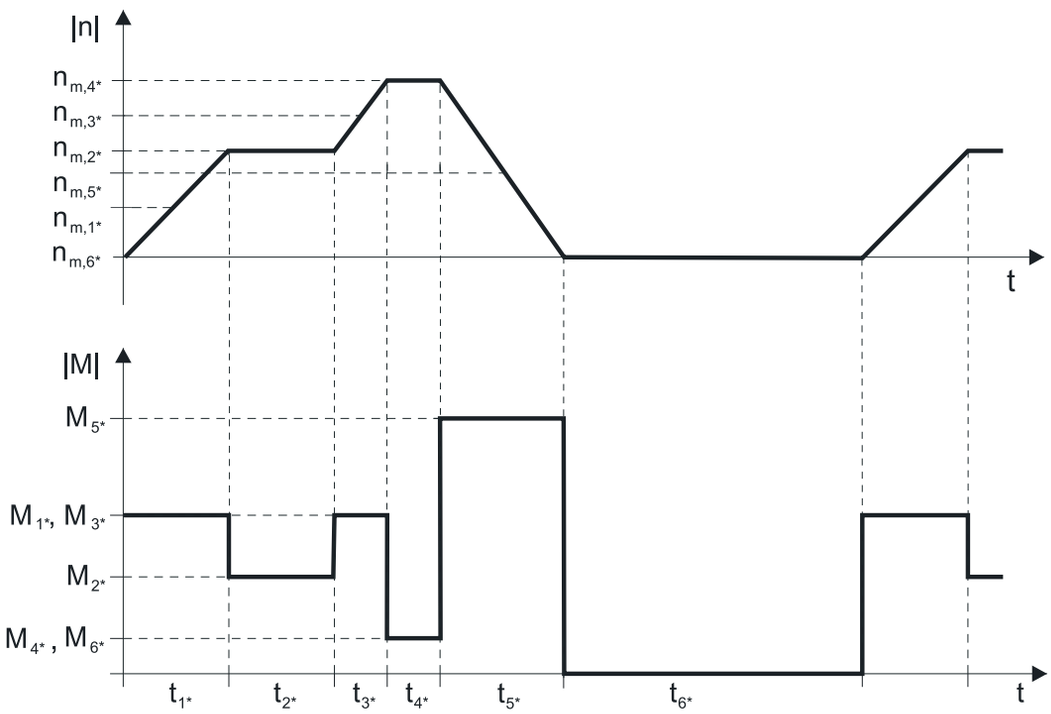

Calculation of the actual average input speed

$$n_{m*} = \frac{|n_{m,1*}| \cdot t_{1*} + \ldots + |n_{m,n*}| \cdot t_{n*}}{t_{1*} + \ldots + t_{n*}}$$

If $t_{1*} + \ldots + t_{5*} \geq 6$ min, determine n_{m*} without the rest phase t_{6*}.

Calculation of the actual effective torque

$$M_{eff*} = \sqrt{\frac{t_{1*} \cdot M_{1*}^2 + \ldots + t_{n*} \cdot M_{n*}^2}{t_{1*} + \ldots + t_{n*}}}$$

17.7.2 Permitted shaft loads

This chapter contains information about the maximum permitted shaft loads of the output shaft of the motor.

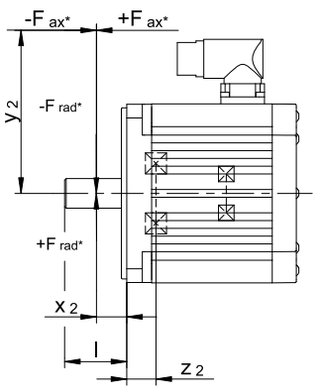

Type	z_2 [mm]	F_{ax100} [N]	F_{rad100} [N]	M_{k100} [Nm]
EZ301	24.0	350	1000	39
EZ302	24.0	350	1000	39
EZ303	24.0	350	1000	39
EZ401	19.5	550	1800	62
EZ402	19.5	550	1800	71
EZ404	19.5	550	1800	71
EZ501	19.5	750	2000	79
EZ502	19.5	750	2400	95
EZ503	19.5	750	2400	107
EZ505	19.5	750	2400	107
EZ701	24.5	1300	3500	173
EZ702	24.5	1300	4200	208
EZ703	24.5	1300	4200	208
EZ705	24.5	1300	4200	225
EZ802	28.5	1750	5600	384
EZ803	28.5	1750	5600	384
EZ805	28.5	1750	5600	384

The values for permitted shaft loads specified in the table apply:

- For shaft dimensions in accordance with the catalog
- A force applied at the center of the output shaft: $x_2 = l / 2$ (shaft dimensions can be found in the chapter [▸ 17.4])
- Output speeds $n_{m*} \leq 100$ rpm ($F_{ax} = F_{ax100}$; $F_{rad} = F_{rad100}$; $M_k = M_{k100}$)

The following applies to output speeds $n_{m*} > 100$ rpm:

$$F_{ax} = \frac{F_{ax100}}{\sqrt[3]{\frac{n_{m*}}{100\ \text{rpm}}}} \qquad F_{rad} = \frac{F_{rad100}}{\sqrt[3]{\frac{n_{m*}}{100\ \text{rpm}}}} \qquad M_k = \frac{M_{k100}}{\sqrt[3]{\frac{n_{m*}}{100\ \text{rpm}}}}$$

The following applies to other force application points:

$$M_{k*} = \frac{2 \cdot F_{ax*} \cdot y_2 + F_{rad*} \cdot (x_2 + z_2)}{1000} \leq M_{k100}$$

$$F_{rad*} \leq F_{rad100}$$

$$F_{ax*} \leq F_{ax100}$$

For applications with multiple axial and/or radial forces, you must add the forces as vectors.

17.7.3 Derating

If you use the motor under ambient conditions that differ from the standard ambient conditions, the nominal torque M_N of the motor is reduced. In this chapter, you can find information for calculating the reduced nominal torque.

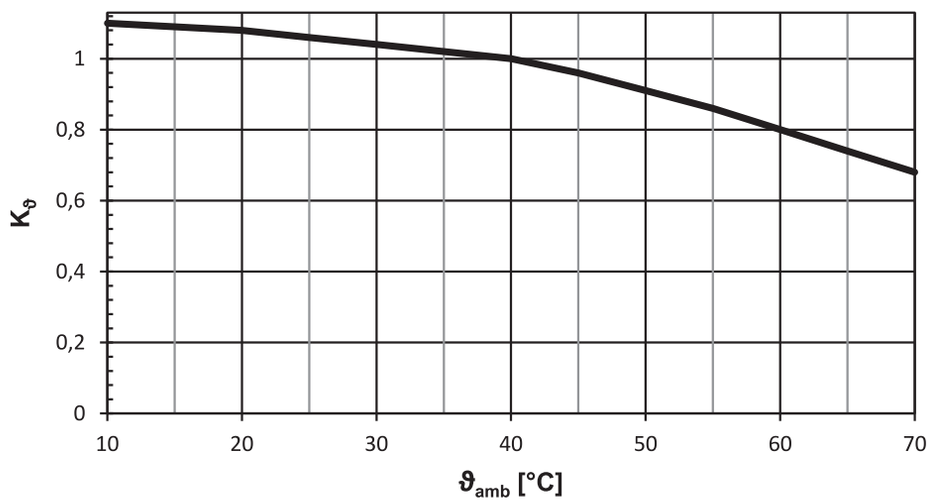

Fig. 5: Derating depending on the surrounding temperature

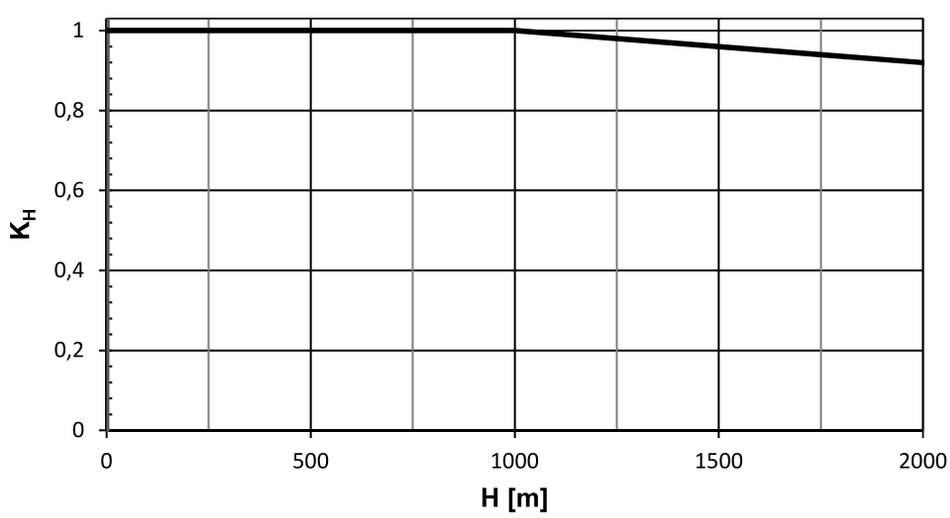

Fig. 6: Derating depending on the installation height

Calculation

If surrounding temperature ϑ_{amb} > 40 °C:

$M_{Nred} = M_N \cdot K_\vartheta$

If installation altitude H > 1000 m above sea level:

$M_{Nred} = M_N \cdot K_H$

If the surrounding temperature ϑ_{amb} > 40 °C and installation altitude H > 1000 m above sea level:

$M_{Nred} = M_N \cdot K_H \cdot K_\vartheta$

17.8 Further information

17.8.1 Directives and standards

STOBER synchronous servo motors meet the requirements of the following directives and standards:

- (Low Voltage) Directive 2014/35/EU
- EN 60034-1:2010 + Cor.:2010
- EN 60034-5:2001 + A1:2007
- EN 60034-6:1993

17.8.2 Identifiers and test symbols

STOBER synchronous servo motors have the following identifiers and test symbols:

CE mark: The product meets the requirements of EU directives.

cURus test symbol "Servo and Stepper Motors – Component"; registered under UL number E488992 with Underwriters Laboratories USA (optional).

17.8.3 Additional documentation

Additional documentation related to the product can be found at
http://www.stoeber.de/en/downloads/

Enter the ID of the documentation in the Search... field.

Documentation	ID
Operating manual for EZ synchronous servo motors	443032_en

18 EZHD synchronous servo motors with hollow shaft

Table of contents

18.1 Overview ... 556

18.2 Selection tables ... 557

18.3 Torque/speed curves ... 558

18.4 Dimensional drawings ... 562

18.4.1 EZHD04 motors ... 562

18.4.2 EZHD05 – EZHD07 motors ... 563

18.5 Type designation ... 564

18.6 Product description ... 564

18.6.1 General features ... 564

18.6.2 Electrical features ... 564

18.6.3 Ambient conditions ... 565

18.6.4 Encoders ... 565

18.6.5 Temperature sensor ... 566

18.6.6 Cooling ... 568

18.6.7 Holding brake ... 568

18.6.8 Connection method ... 570

18.7 Project configuration ... 573

18.7.1 Calculation of the operating point ... 573

18.7.2 Permitted shaft loads ... 574

18.7.3 Derating ... 575

18.8 Further information ... 576

18.8.1 Directives and standards ... 576

18.8.2 Identifiers and test symbols ... 576

18.8.3 Additional documentation ... 576

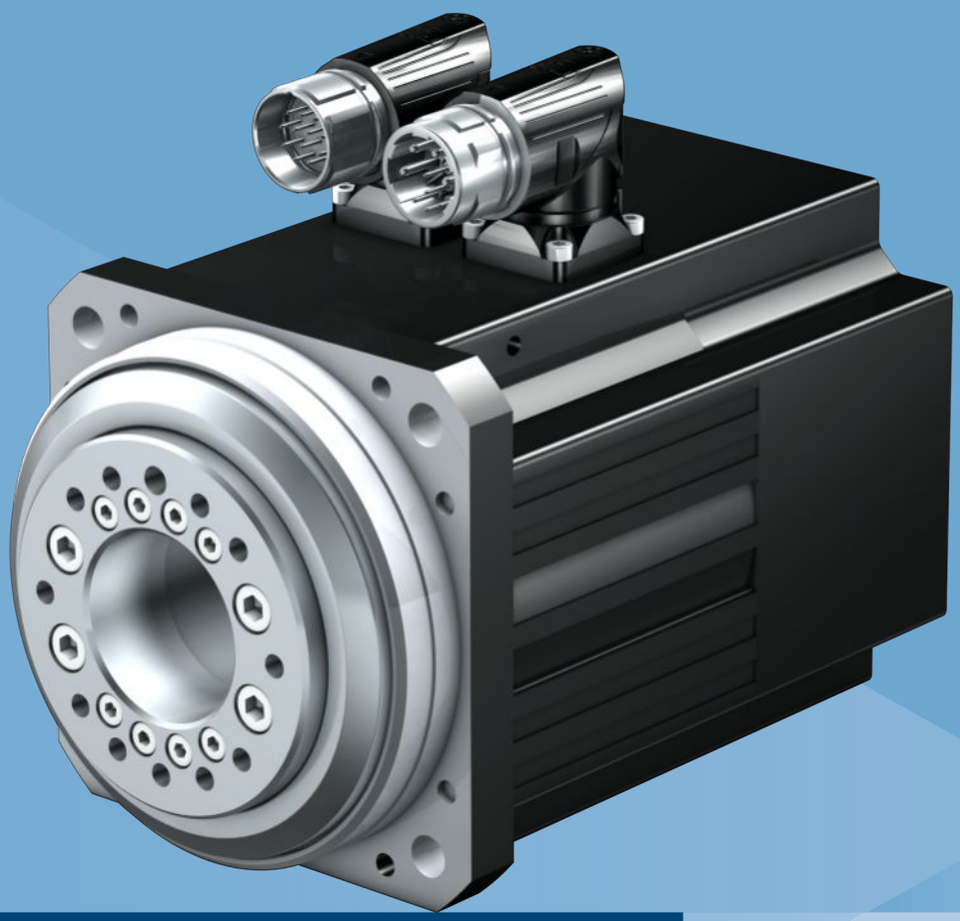

18

Synchronous servo motors with hollow shaft

EZHD

18.1 Overview

Synchronous servo motors with hollow shaft

Features

Continuous flange hollow shaft for conveying media	✓
Reinforced A-side bearing for absorbing radial forces	✓
Reinforced B-side bearing for absorbing axial forces	✓
High dynamics	✓
Super compact due to tooth-coil winding method with the highest possible copper fill factor	✓
Backlash-free holding brake (optional)	✓
Inductive EnDat absolute encoders	✓
Elimination of referencing with multi-turn absolute encoders (optional)	✓
Electronic nameplate for fast and reliable commissioning	✓
Rotatable plug connectors with quick lock	✓

Torques

M_N	1.9 – 24.6 Nm
M_0	2.6 – 31.1 Nm

18.2 Selection tables

The technical data specified in the selection tables applies to:

- Installation altitudes up to 1000 m above sea level
- Surrounding temperatures from −15 °C to +40 °C
- Operation on a STOBER drive controller
- DC link voltage U_{ZK} = DC 540 V
- Coating: RAL 9005 Jet black, matte

In addition, the technical data applies to an uninsulated design with the following thermal mounting conditions:

Type	Dimensions of steel mounting flange (thickness x width x height)	Convection surface area Steel mounting flange
EZHD04 EZHD05	23 x 210 x 275 mm	0.16 m^2
EZHD07	28 x 300 x 400 mm	0.3 m^2

Note the differing ambient conditions in Chapter [▸ 18.7.3]

Formula symbols

An explanation of the formula symbols can be found in Chapter [▸ 23.1].

Observe the additional information on the following formula symbols:

- I_0 = RMS value of the line-to-line current when stall torque M_0 is generated (tolerance ±5%).
- I_{max} = RMS value of the short-term maximum permitted line-to-line current when maximum torque M_{max} is generated (tolerance ±5%). Exceeding I_{max} may lead to irreversible damage (demagnetization) of the rotor.
- I_N = RMS value of the line-to-line current when nominal torque M_N is generated at the nominal point (tolerance ±5%).
- M_0 = Torque that a motor is continuously able to deliver at a speed of 10 rpm (tolerance ±5%). At a speed of 0 rpm, a minor continuous torque has to be taken into account. Contact your STOBER customer advisor for such an application.

Type	K_{EM} [V/1000 rpm]	n_N [rpm]	M_N [Nm]	I_N [A]	$K_{M,N}$ [Nm/A]	P_N [kW]	M_0 [Nm]	I_0 [A]	K_{M0} [Nm/A]	M_R [Nm]	M_{max} [Nm]	I_{max} [A]	R_{U-V} [Ω]	L_{U-V} [mH]	T_{el} [ms]	J [kcgm²]	m [kg]
EZHD0411U	96	3000	1.90	2.36	0.81	0.60	2.60	2.89	1.05	0.44	8.50	16.5	6.70	37.70	5.63	9.35	5.46
EZHD0412U	94	3000	4.20	4.29	0.98	1.3	5.10	4.94	1.12	0.44	16.0	26.5	3.00	21.80	7.26	10.1	6.55
EZHD0414U	116	3000	7.70	6.30	1.22	2.4	8.50	6.88	1.30	0.44	29.0	35.0	1.85	15.00	8.11	11.6	8.55
EZHD0511U	97	3000	3.00	3.32	0.90	0.94	4.10	4.06	1.12	0.44	16.0	22.0	3.80	23.50	6.18	22.3	7.50
EZHD0512U	121	3000	7.00	5.59	1.25	2.2	7.80	6.13	1.34	0.44	31.0	33.0	2.32	16.80	7.24	25.1	8.90
EZHD0513U	119	3000	8.30	7.04	1.18	2.6	10.9	8.76	1.29	0.44	43.0	41.0	1.25	10.00	8.00	27.9	10.3
EZHD0515U	141	3000	14.0	9.46	1.48	4.4	16.4	11.0	1.54	0.44	67.0	52.0	0.93	8.33	8.96	33.6	13.1
EZHD0711U	95	3000	7.30	7.53	0.97	2.3	7.90	7.98	1.07	0.63	20.0	25.0	1.30	12.83	9.87	63.6	13.8
EZHD0712U	133	3000	11.6	8.18	1.42	3.6	14.4	9.99	1.50	0.63	41.0	36.0	1.00	11.73	11.73	72.5	16.2
EZHD0713U	122	3000	17.8	13.4	1.33	5.6	20.4	15.1	1.39	0.63	65.0	62.0	0.52	6.80	13.08	81.4	18.5
EZHD0715U	140	3000	24.6	17.2	1.43	7.7	31.1	21.1	1.50	0.63	104	87.0	0.33	4.80	14.55	100	23.9

18.3 Torque/speed curves

Torque/speed curves depend on the nominal speed and/or winding design of the motor and the DC link voltage of the drive controller that is used. The following torque/speed curves apply to the DC link voltage DC 540 V.

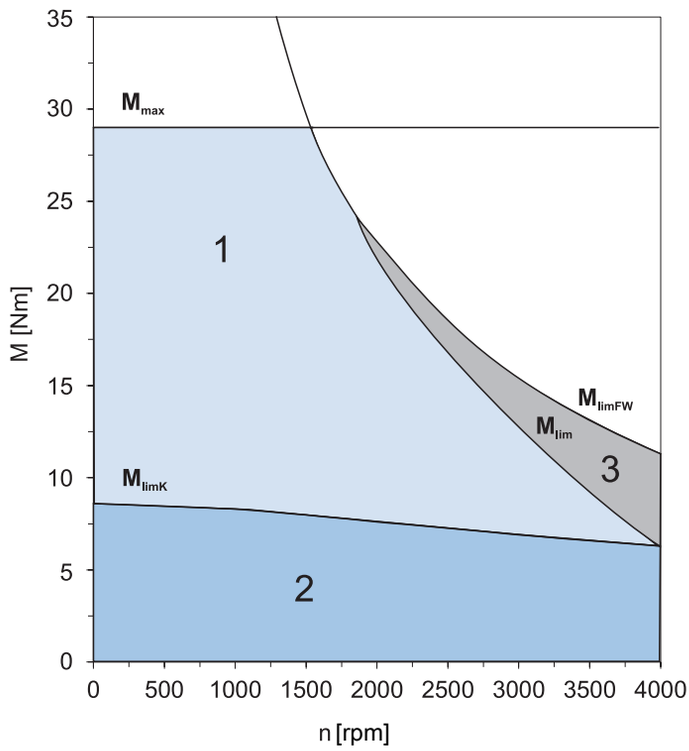

Fig. 1: Explanation of a torque/speed curve

1	Torque range for brief operation (ED_{10} < 100%) with Δϑ = 100 K	2	Torque range for continuous operation with constant load (S1 mode, ED_{10} = 100%) with Δϑ = 100 K
3	Field weakening range (can be used only with operation on STOBER drive controllers)		

EZHD0411U (n_N=3000 rpm)

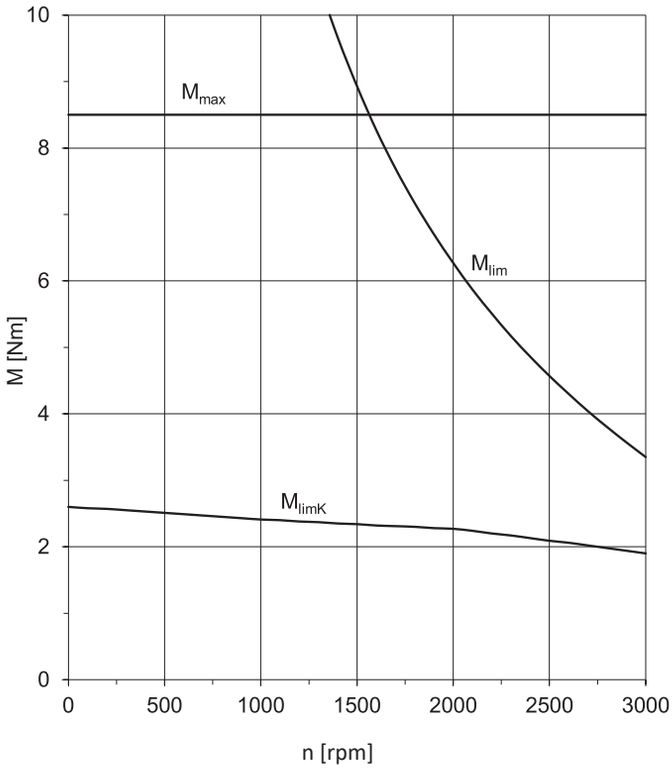

EZHD0412U (n_N=3000 rpm)

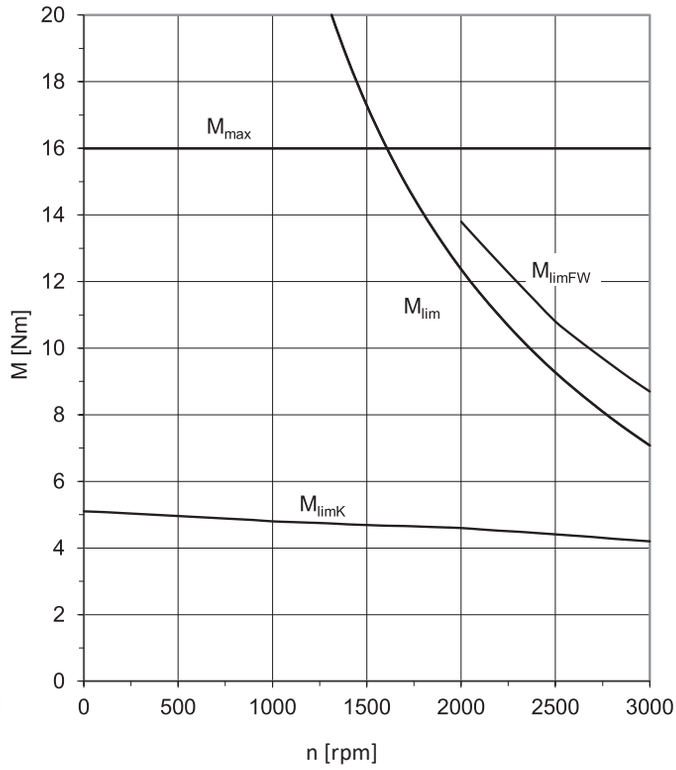

EZHD0414U (n_N=3000 rpm)

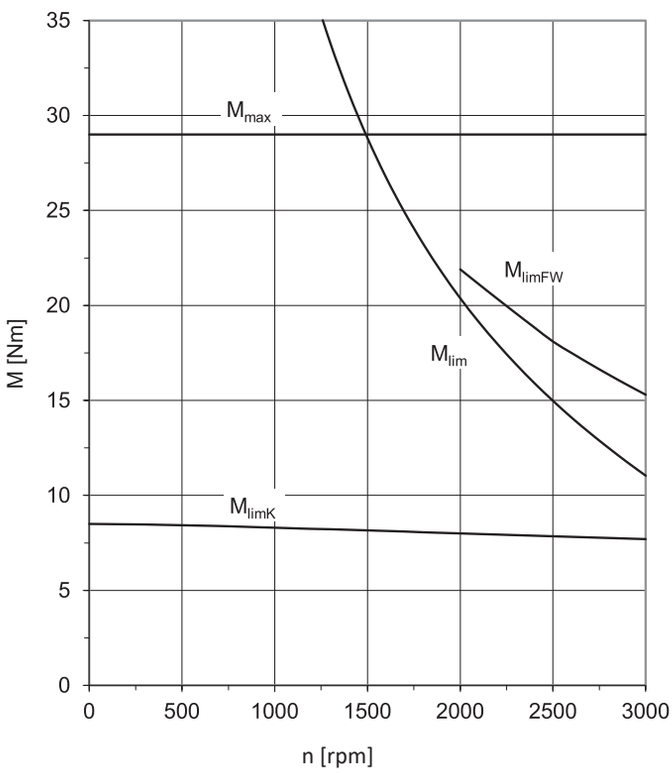

EZHD0511U (n_N=3000 rpm)

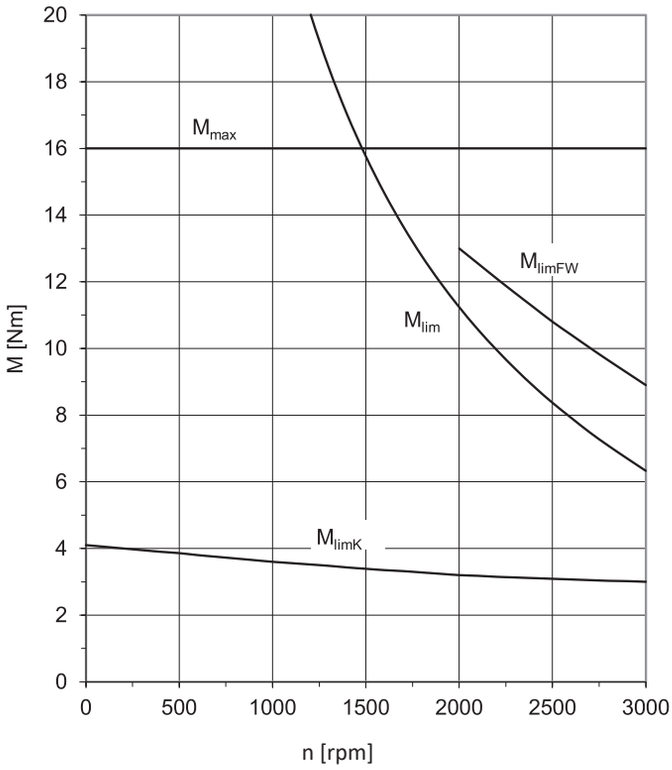

EZHD0512U (n_N=3000 rpm)

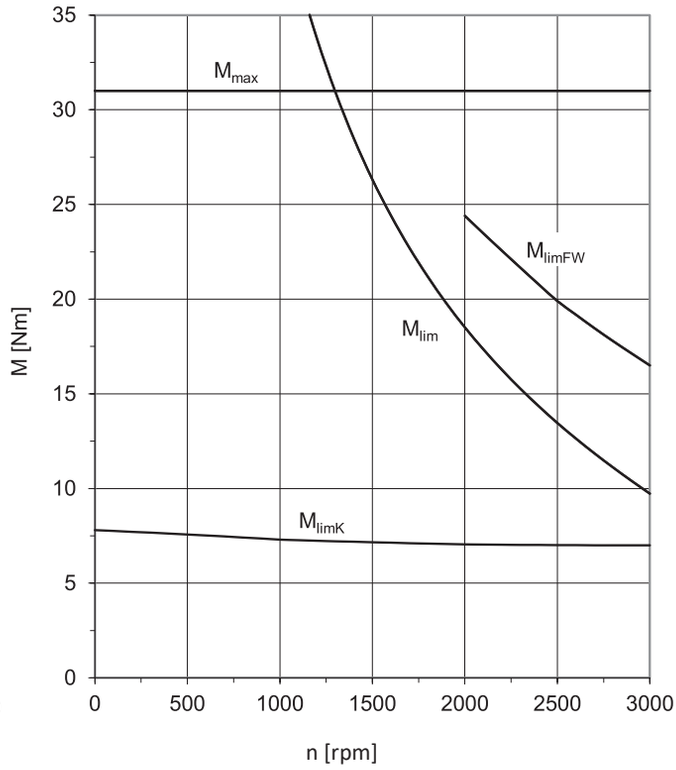

EZHD0513U (n_N=3000 rpm)

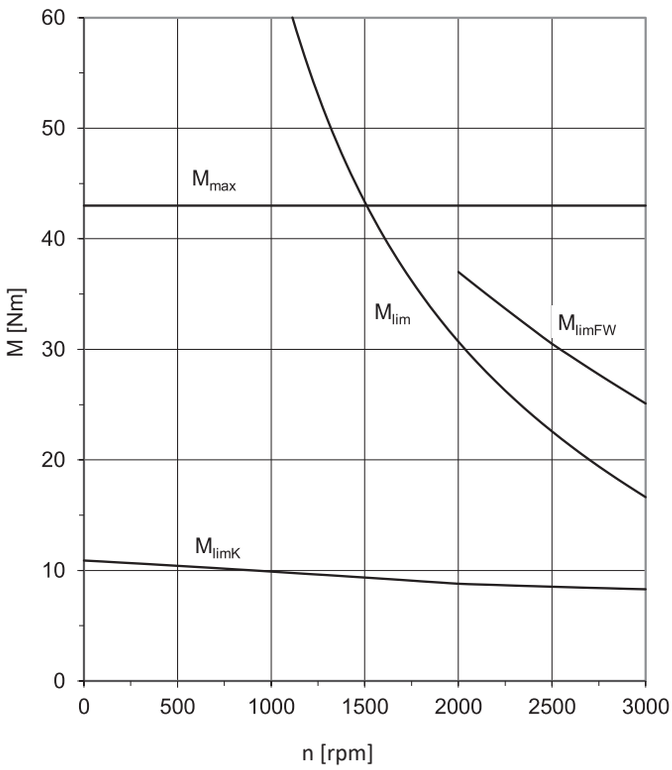

EZHD0515U (n_N=3000 rpm)

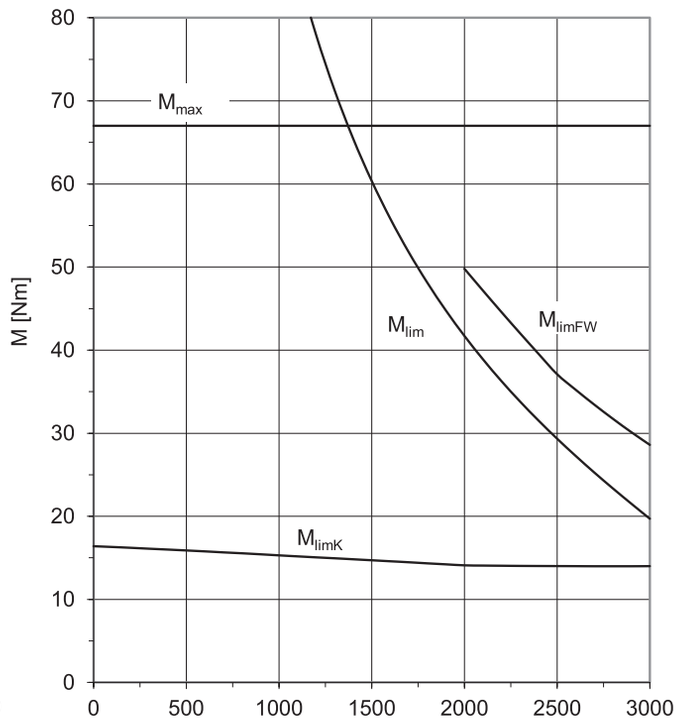

EZHD0711U (n_N=3000 rpm)

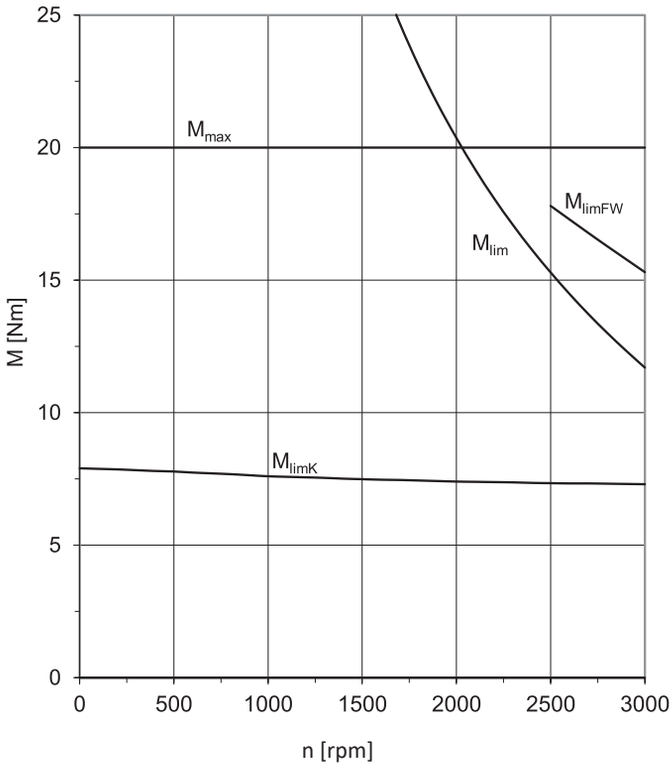

EZHD0712U (n_N=3000 rpm)

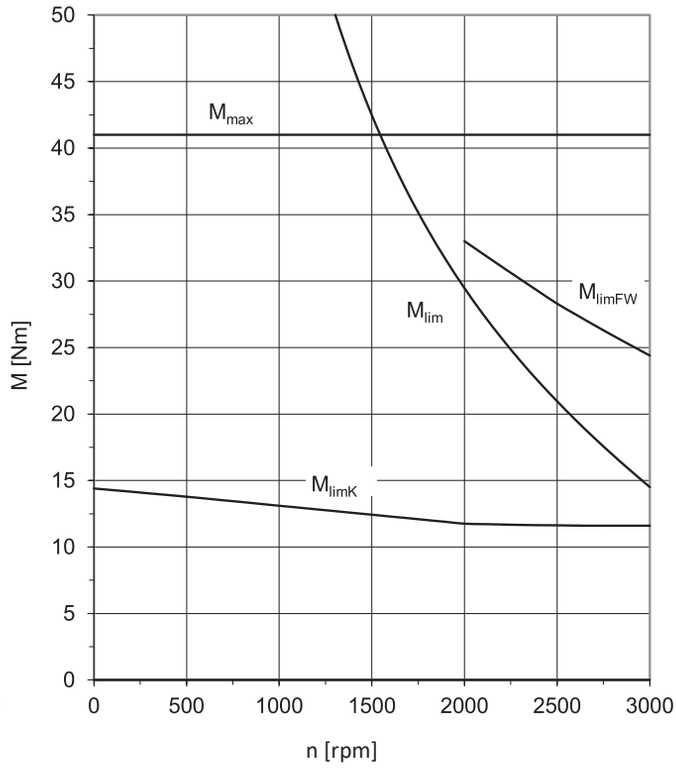

EZHD0713U (n_N=3000 rpm)

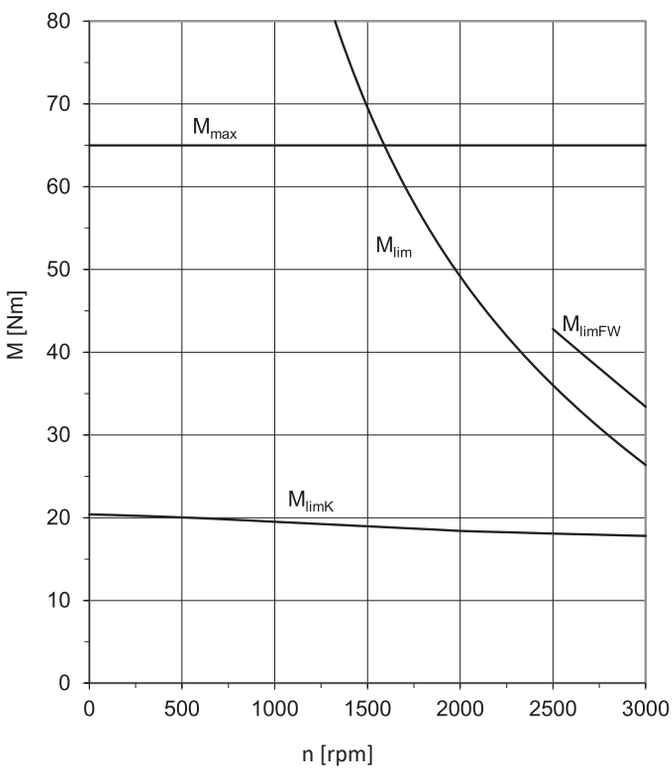

EZHD0715U (n_N=3000 rpm)

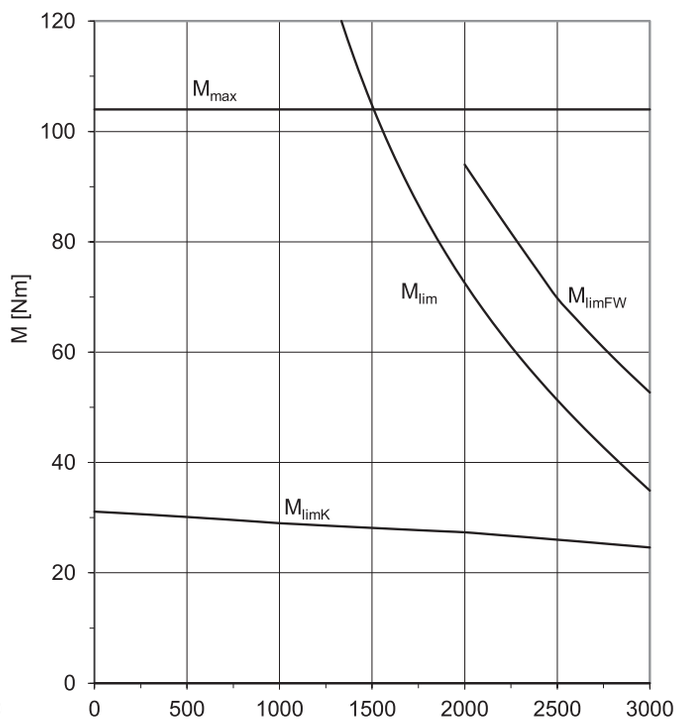

18.4 Dimensional drawings

In this chapter, you can find the dimensions of the motors.

Dimensions can exceed the specifications of ISO 2768-mK due to casting tolerances or accumulation of individual tolerances.

We reserve the right to make dimensional changes due to ongoing technical development.

You can download 3D models of our standard drives at http://configurator.stoeber.de.

In this chapter, the dimensions p1 and w1 for standard motor designs are presented. In designs for connection to drive controllers of third-party manufacturers, dimensions p1 and w1 may differ. You can find more details at http://configurator.stoeber.de.

18.4.1 EZHD04 motors

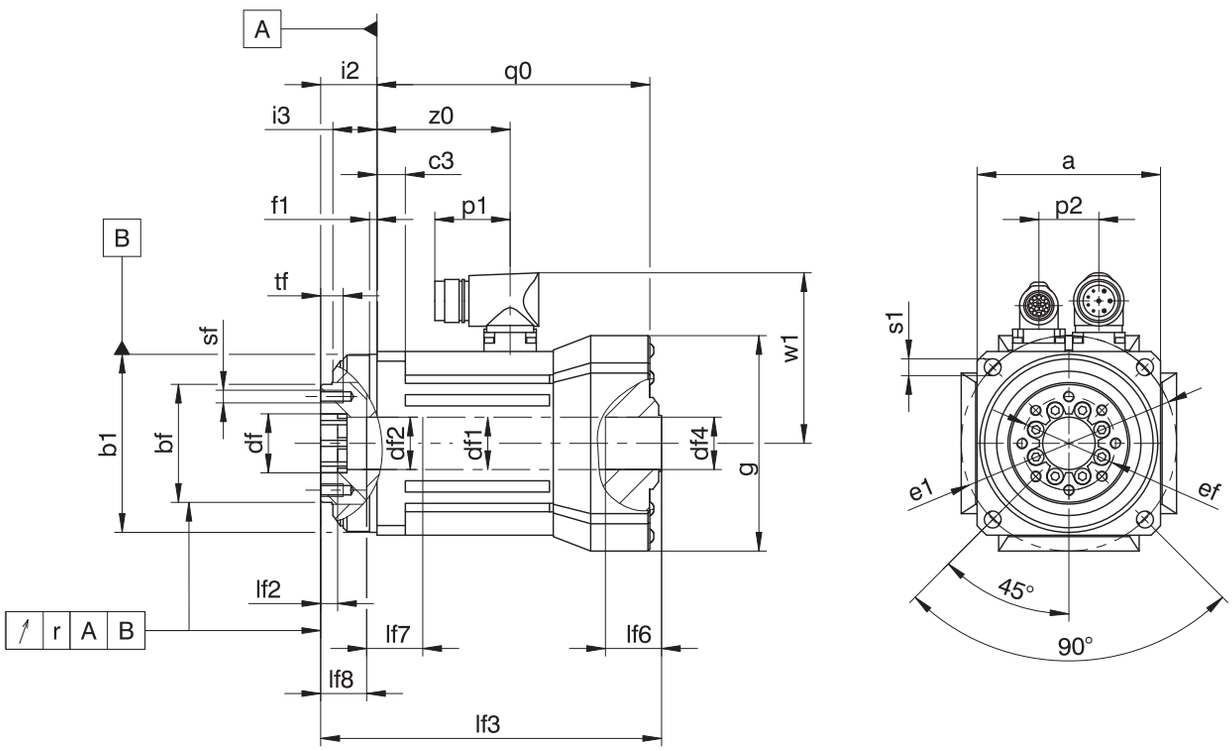

Type	□a	Øb1	Øbf	c3	Ødf	Ødf1	Ødf2	Ødf4	Øe1	Øef	f1	□g	i2	i3	lf2	lf3	lf6	lf7	lf8	p1	p2	q0	r	Øs1	sf	tf	w1	z0
EZHD0411	98	95_{j6}	63_{h7}	15.1	31.5^{H7}	28.4	$28^{+0,1}$	28^{JS10}	115	50	4	115	30±0.4	23.5	9	182	30	30	24.5	40	32	145.8	0.030	9	M6	11	91	71
EZHD0412	98	95_{j6}	63_{h7}	15.1	31.5^{H7}	28.4	$28^{+0,1}$	28^{JS10}	115	50	4	115	30±0.4	23.5	9	207	30	30	24.5	40	32	170.8	0.030	9	M6	11	91	96
EZHD0414	98	95_{j6}	63_{h7}	15.1	31.5^{H7}	28.4	$28^{+0,1}$	28^{JS10}	115	50	4	115	30±0.4	23.5	9	257	30	30	24.5	40	32	220.8	0.030	9	M6	11	91	143

18.4.2 EZHD05 – EZHD07 motors

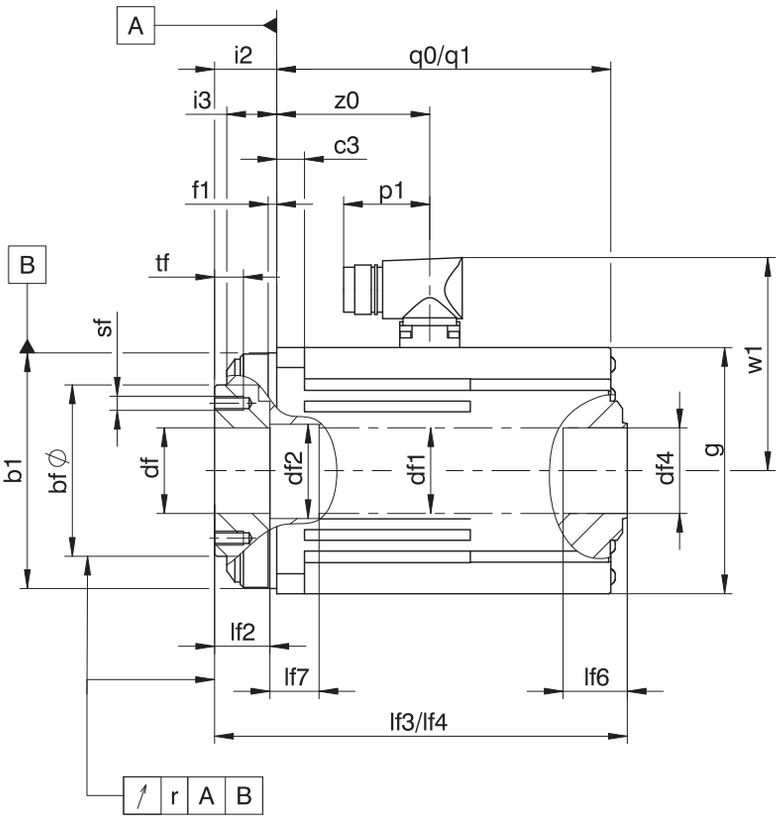

EZHD05

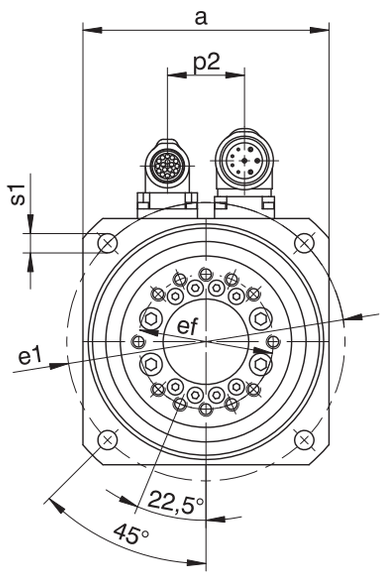

EZHD07

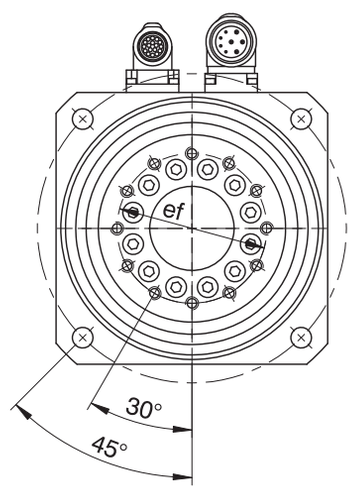

q0, lf3 Applies to motors without holding brake.

q1. lf4 Applies to motors with holding brake.

Type	□a	Øb1	Øbf	c3	Ødf	Ødf1	Ødf2	Ødf4	Øe1	Øef	f1	□g	i2	i3
EZHD0511	115	110_{j6}	80_{h7}	13.0	40.0^{H7}	40.5	$44^{+0,1}$	40^{JS10}	130	63	4	115	29±0.4	23.3
EZHD0512	115	110_{j6}	80_{h7}	13.0	40.0^{H7}	40.5	$44^{+0,1}$	40^{JS10}	130	63	4	115	29±0.4	23.3
EZHD0513	115	110_{j6}	80_{h7}	13.0	40.0^{H7}	40.5	$44^{+0,1}$	40^{JS10}	130	63	4	115	29±0.4	23.3
EZHD0515	115	110_{j6}	80_{h7}	13.0	40.0^{H7}	40.5	$44^{+0,1}$	40^{JS10}	130	63	4	115	29±0.4	23.3
EZHD0711	145	140_{j6}	100_{h7}	14.5	50.0^{H7}	45.5	$50^{+0,1}$	45^{JS10}	165	80	4	145	38±0.4	24.5
EZHD0712	145	140_{j6}	100_{h7}	14.5	50.0^{H7}	45.5	$50^{+0,1}$	45^{JS10}	165	80	4	145	38±0.4	24.5
EZHD0713	145	140_{j6}	100_{h7}	14.5	50.0^{H7}	45.5	$50^{+0,1}$	45^{JS10}	165	80	4	145	38±0.4	24.5
EZHD0715	145	140_{j6}	100_{h7}	14.5	50.0^{H7}	45.5	$50^{+0,1}$	45^{JS10}	165	80	4	145	38±0.4	24.5

Type	lf2	lf3	lf4	lf6	lf7	p1	p2	q0	q1	r	Øs1	sf	tf	w1	z0
EZHD0511	25.8	192.8	248.3	30	23.0	40	36	156.1	211.4	0.030	9	M6	11	100	71.5
EZHD0512	25.8	217.8	273.3	30	23.0	40	36	181.1	236.4	0.030	9	M6	11	100	96.3
EZHD0513	25.8	242.8	298.3	30	23.0	40	36	206.1	261.4	0.030	9	M6	11	100	121.5
EZHD0515	25.8	292.8	348.3	30	23.0	40	36	256.1	311.4	0.030	9	M6	11	100	171.5
EZHD0711	33.5	219.0	278.7	30	40.5	40	42	172.2	232.2	0.030	11	M8	15	115	78.7
EZHD0712	33.5	244.0	303.7	30	40.5	40	42	197.2	257.2	0.030	11	M8	15	115	103.7
EZHD0713	33.5	269.0	328.7	30	40.5	40	42	222.2	282.2	0.030	11	M8	15	115	128.7
EZHD0715	33.5	324.0	383.7	30	40.5	71	42	277.2	337.2	0.030	11	M8	15	134	179.7

18.5 Type designation

Example code

EZH	D	0	5	1	1	U	F	AD	B1	O	097

Explanation

Code	Designation	Design
EZH	Type	Synchronous servo motor with hollow shaft
D	Drive	Direct drive
0	Stages	Zero-stage (direct drive)
5	Motor size	5 (example)
1	Generation	1
1	Length	1 (example)
U	Cooling	Convection cooling
F	Output	Flange
AD	Drive controller	SD6 (example)
B1	Encoder	EnDat 2.2 EBI 135 EnDat 2.2 (example)
O P	Brake	Without holding brake Permanent magnet holding brake[1]
097	Voltage constant K_{EM}	97 V/1000 rpm (example)

Notes

- In Chapter [▸ 18.6.4], you can find information about available encoders.
- In Chapter [▸ 18.6.4.3], you can find information about connecting synchronous servo motors to other drive controllers from STOBER.
- In Chapter [▸ 21], you can find information about options for connecting STOBER synchronous servo motors to drive controllers from other manufacturers.

18.6 Product description

18.6.1 General features

Feature	Description
Design	IM B5, IM V1, IM V3 in accordance with EN 60034-7
Protection class	IP56
Thermal class	155 (F) in accordance with EN 60034-1 (155 °C, heating Δϑ = 100 K)
Surface	Matte black as per RAL 9005
Cooling	IC 410 convection cooling
Bearing	Rolling bearing with lifetime lubrication and non-contact sealing
Sealing	Gamma ring (on A and B side)
Vibration intensity	A in accordance with EN 60034-14
Noise level	Limit values in accordance with EN 60034-9

18.6.2 Electrical features

General electrical features of the motor are described in this chapter. Details can be found in the "Selection tables" chapter.

Feature	Description
DC link voltage	DC 540 V (max. 620 V) on STOBER drive controllers
Winding	Three-phase, single-tooth coil design
Circuit	Star, center not led through
Protection class	I (protective grounding) in accordance with EN 61140
Impulse voltage insulation class (IVIC)	C in accordance with DIN EN 60034-18-41 (inverter connection voltage 0 – 480 V ± 10%)
Number of pole pairs	7

[1] Not available for EZHD_4.

18.6.3 Ambient conditions

Standard ambient conditions for transport, storage and operation of the motor are described in this chapter. Information about differing ambient conditions can be found in the chapter [▶ 18.7.3].

Feature	Description
Surrounding temperature for transport/storage	−30 °C to +85 °C
Surrounding temperature for operation	−15 °C to +40 °C
Relative humidity	5% to 95%, no condensation
Installation altitude	≤ 1000 m above sea level
Shock load	≤ 50 m/s² (5 g), 6 ms in accordance with EN 60068-2-27

Notes

- STOBER synchronous servo motors are not suitable for potentially explosive atmospheres.
- Secure the power cables close to the motor so that vibrations of the cable do not place impermissible loads on the motor plug connector.
- Note that the braking torques of the holding brake (optional) may be reduced by shock loading.
- At operating temperatures below 0 °C, note that the discs of the holding brake (optional) may ice up.
- Also take into consideration the shock load of the motor due to output units (such as gear units and pumps) which are coupled with the motor.

18.6.4 Encoders

STOBER synchronous servo motors can be designed with different encoder models. The following chapters include information for choosing the optimal encoder for your application.

18.6.4.1 Selection tool for EnDat interface

The following table offers a selection tool for the EnDat interface of absolute encoders.

Feature	EnDat 2.1	EnDat 2.2
Short cycle times	★★☆	★★★
Transfer of additional information along with the position value	–	✓
Expanded power supply range	★★☆	★★★
Key: ★★☆ = good, ★★★ = very good		

18.6.4.2 EnDat encoders

In this chapter, you can find detailed technical data for encoder models that can be selected with EnDat interface.

Encoders with EnDat 2.2 interface

Encoder model	Code	Measuring method	Recordable revolutions	Resolution	Position values per revolution
EnDat 2.2 EBI 135	B1	Inductive	65536	19 bit	524288
EnDat 2.2 ECI 119-G2	C9	Inductive	–	19 bit	524288

Encoders with EnDat 2.1 interface

Encoder model	Code	Measuring method	Recordable revolutions	Resolution	Position values per revolution	Periods per revolution
EnDat 2.1 ECI 119	C4	Inductive	–	19 bit	524288	Sin/Cos 32

Notes

- The encoder code is a part of the type designation of the motor.
- Multiple revolutions of the motor shaft can be recorded only using multi-turn encoders.
- The EnDat 2.2 EBI 135 encoder requires an external buffer battery so that absolute position information is retained after the power supply is turned off (AES option for STOBER drive controllers).

18.6.4.3 Possible combinations with drive controllers

The following table shows the options for combining STOBER drive controllers with selectable encoder models.

Drive controller		SDS 5000	MDS 5000	SDS 5000/ MDS 5000	SD6		SI6	SC6
Drive controller code		AA	AB	AC	AD	AE	**AP**	**AU**
Connection plan ID		442305	442306	442307	442450	442451	**442771**	**443052**
Encoder	**Encoder code**							
EnDat 2.2 EBI 135	B1	✓	✓	–	✓	–	✓	✓
EnDat 2.2 ECI 119-G2	C9	✓	✓	–	✓	–	✓	✓
EnDat 2.1 ECI 119	C4	–	–	✓	–	✓	–	–

Notes

- The drive controller and encoder codes are a part of the type designation of the motor (see the "Type designation" chapter).
- In Chapter [▸ 21], you can find information about options for connecting STOBER synchronous servo motors to drive controllers from other manufacturers.

18.6.5 Temperature sensor

In this chapter, you can find technical data for the temperature sensors that are installed in STOBER synchronous servo motors for implementing thermal winding protection. To prevent damage to the motor, always monitor the temperature sensor with appropriate devices that will turn off the motor if the maximum permitted winding temperature is exceeded.

Some encoders feature integrated temperature monitoring, the warning and switch-off thresholds of which may overlap with the corresponding values set for the temperature sensor in the drive controller. In some cases, this may result in an instance where an encoder with internal temperature monitoring forces the motor to shut down, even before the motor has reached its nominal data.

You can find information about the electrical connection of the temperature sensor in the "Connection method" chapter.

18.6.5.1 PTC thermistor

The PTC thermistor is installed as a standard temperature sensor in STOBER synchronous servo motors.

The PTC thermistor is a triple thermistor in accordance with DIN 44082 that can be used for monitoring the temperature of each winding phase. The resistance values in the following table and curve refer to a single thermistor in accordance with DIN 44081. These values must be multiplied by 3 for a triple thermistor in accordance with DIN 44082.

Feature	Description
Nominal response temperature ϑ_{NAT}	145 °C ± 5 K
Resistance R −20 °C up to ϑ_{NAT} − 20 K	≤ 250 Ω
Resistance R with ϑ_{NAT} − 5 K	≤ 550 Ω
Resistance R with ϑ_{NAT} + 5 K	≥ 1330 Ω
Resistance R with ϑ_{NAT} + 15 K	≥ 4000 Ω
Operating voltage	≤ DC 7.5 V
Thermal response time	< 5 s
Thermal class	155 (F) in accordance with EN 60034-1 (155 °C, heating Δϑ = 100 K)

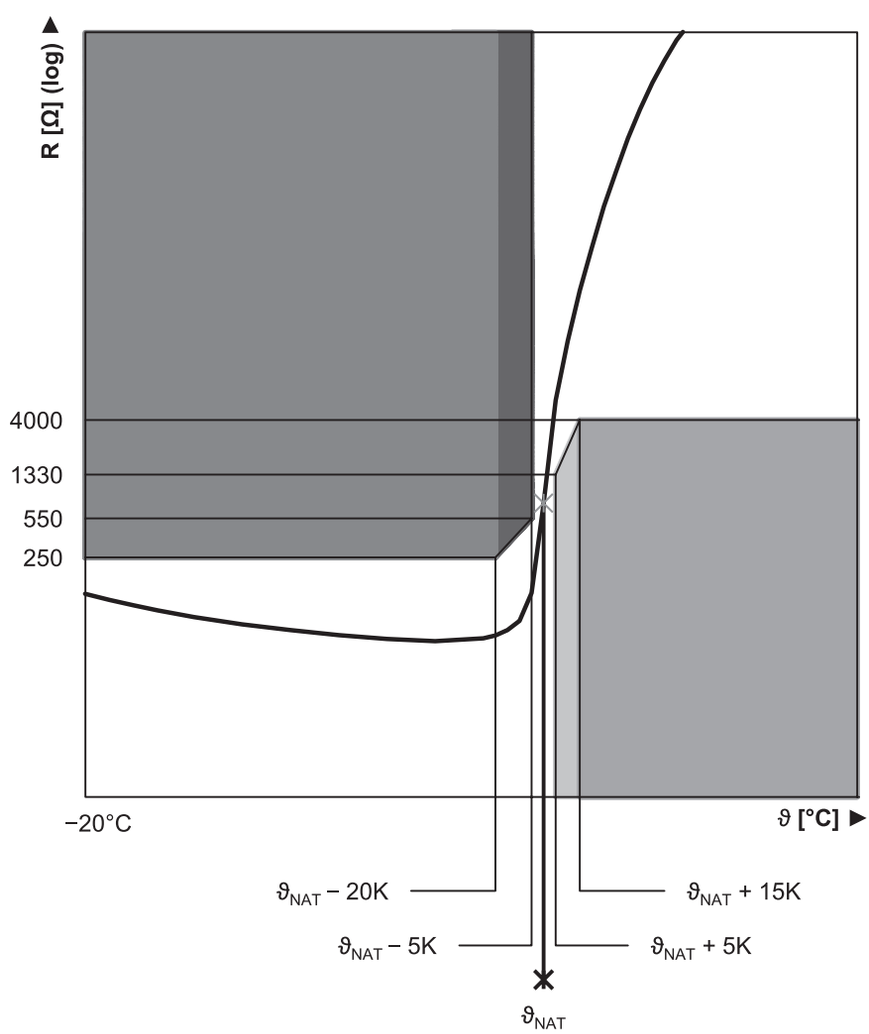

Fig. 2: PTC thermistor curve (single thermistor)

18.6.5.2 Pt1000 temperature sensor

STOBER synchronous servo motors are available in versions with a Pt1000 temperature sensor. The Pt1000 is a temperature-dependent resistor that has a resistance curve with a linear relationship with temperature. As a result, the Pt1000 allows for measurements of the winding temperature. These measurements are limited to one phase of the motor winding, however. In order to adequately protect the motor from exceeding the maximum permitted winding temperature, use a i^2t model in the drive controller to monitor the winding temperature.

Avoid exceeding the specified measurement current so that the measured values are not falsified due to self-heating of the temperature sensor.

Feature	Description
Measurement current (constant)	2 mA
Resistance R for ϑ = 0 °C	1000 Ω
Resistance R for ϑ = 80 °C	1300 Ω
Resistance R for ϑ = 150 °C	1570 Ω

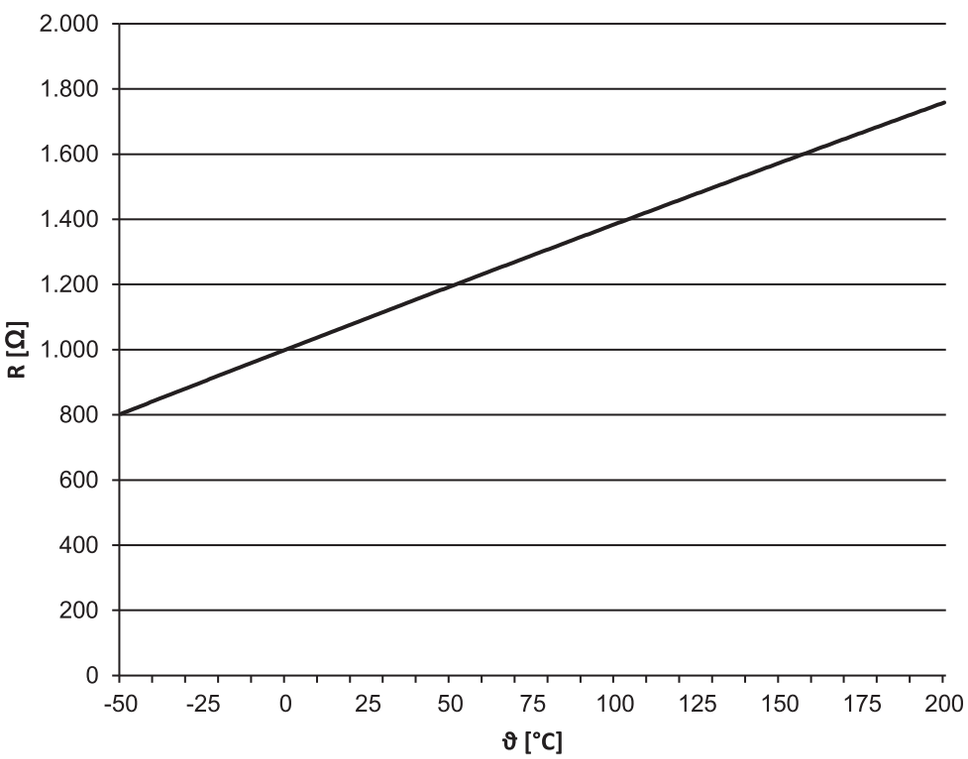

Fig. 3: Pt1000 temperature sensor characteristic curve

18.6.6 Cooling

An EZHD motor is cooled by convection cooling (IC 410 in accordance with EN 60034-6).

18.6.7 Holding brake

STOBER synchronous servo motors can be equipped with a backlash-free holding brake using permanent magnets in order to secure the motor shaft when at a standstill. The holding brake engages automatically if the voltage drops.

The holding brake is designed for a high number of operations (B_{10} = 10 million operations, B_{10d} = 20 million operations).

Nominal voltage of permanent magnet holding brake: DC 24 V ± 5%, smoothed.

Observe the following during project configuration:

- The holding brake is designed to keep the motor shaft from moving. Activate braking processes during operation using the corresponding electrical functions of the drive controller. In exceptional circumstances, the holding brake can be used for braking from full speed (following a power failure or when setting up the machine). The maximum permitted work done by friction $W_{B,Rmax/h}$ may not be exceeded.

- Note that the braking torque M_{Bdyn} may initially be up to 50% less when braking from full speed. As a result, the braking effect has a delayed action and braking distances become longer.
- Regularly perform a brake test to ensure the functional safety of the brakes. Details can be found in the documentation of the motor and the drive controller.
- Connect a varistor of type S14 K35 (or comparable) in parallel to the brake coil to protect your machine from switching surges. (Not necessary for connecting the holding brake to STOBER drive controllers of the 5th and 6th generation with a BRS/BRM brake module).
- The holding brake of the motor does not offer adequate safety for persons in the hazardous area of gravity-loaded vertical axes. Therefore take additional measures to minimize risk, e.g. by providing a mechanical substructure for maintenance work.
- Take into consideration voltage losses in the connection cables that connect the voltage source to the holding brake connections.
- The holding torque of the brake can be reduced by shock loading. Information about shock loading can be found in the "Ambient conditions" chapter.
- At operating temperatures from −15 °C to 0 °C, a cold holding brake in the released state may cause operating noises. As the temperature of the holding brake increases, these noises decrease such that operating noises are not heard when using holding brake at operating temperature in the released state.

Calculation of work done by friction per braking process

$$W_{B,R/B} = \frac{J_{tot} \cdot n^2}{182.4} \cdot \frac{M_{Bdyn}}{M_{Bdyn} \pm M_L}, \; M_{Bdyn} > M_L$$

The sign of M_L is positive if the movement runs vertically upwards or horizontally and it is negative if the movement runs vertically down.

Calculation of the stop time

$$t_{dec} = 2.66 \cdot t_{1B} + \frac{n \cdot J_{tot}}{9.55 \cdot M_{Bdyn}}$$

Switching behavior

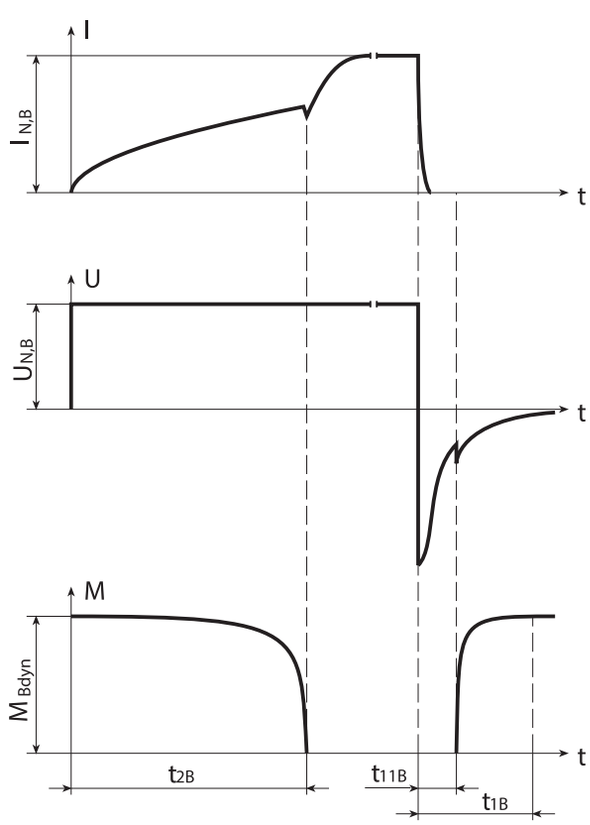

Fig. 4: Holding brake – Switching behavior

Technical data

Type	M_{Bstat} [Nm]	M_{Bdyn} [Nm]	$I_{N,B}$ [A]	$W_{B,Rmax/h}$ [kJ/h]	N_{Bstop}	J_{Bstop} [kgcm²]	$W_{B,Rlim}$ [kJ]	t_{2B} [ms]	t_{11B} [ms]	t_{1B} [ms]	$x_{B,N}$ [mm]	ΔJ_B [kgcm²]	Δm_B [kg]
EZHD0511	18	15	1.1	11.0	2050	54.3	550	55	3.0	30	0.3	4.840	2.30
EZHD0512	18	15	1.1	11.0	1850	59.8	550	55	3.0	30	0.3	4.840	2.30
EZHD0513	18	15	1.1	11.0	1700	65.5	550	55	3.0	30	0.3	4.840	2.30
EZHD0515	18	15	1.1	11.0	1450	76.9	550	55	3.0	30	0.3	4.840	2.30
EZHD0711	28	25	1.1	25.0	1850	152	1400	120	4.0	40	0.4	12.280	3.77
EZHD0712	28	25	1.1	25.0	1650	170	1400	120	4.0	40	0.4	12.280	3.77
EZHD0713	28	25	1.1	25.0	1500	187	1400	120	4.0	40	0.4	12.280	3.77
EZHD0715	28	25	1.1	25.0	1250	224	1400	120	4.0	40	0.4	12.280	3.77

18.6.8 Connection method

The following chapters describe the connection technology of STOBER synchronous servo motors in the standard version on STOBER drive controllers. You can find further information relating to the drive controller type that was specified in your order in the connection plan that is delivered with every synchronous servo motor.

In Chapter [▸ 21], you can find information about options for connecting STOBER synchronous servo motors to drive controllers from other manufacturers.

18.6.8.1 Connection of the motor housing to the grounding conductor system

Connect the motor housing to the grounding conductor system of the machine in order to prevent personal injury and faulty triggering of residual current protective devices.

All attachment parts required for the connection of the grounding conductor to the motor housing are delivered with the motor. The grounding screw of the motor is identified with the symbol ⏚ in accordance with IEC 60417-DB. The cross-section of the grounding conductor has to be at least as large as the cross-section of the lines in the power connection.

18.6.8.2 Plug connectors

STOBER synchronous servo motors are equipped with rotatable quick-lock plug connectors in the standard version. Details can be found in this chapter.

The figures represent the position of the plug connectors upon delivery.

Turning ranges of plug connectors

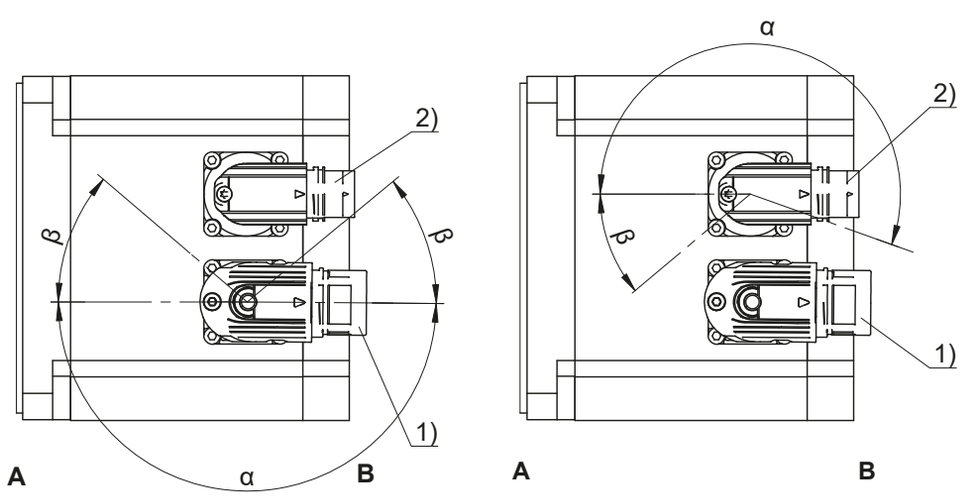

1	Power plug connector	2	Encoder plug connector
A	Attachment or output side of the motor	B	Rear side of the motor

Power plug connector features

Motor type	Size	Connection	Turning range	
			α	β
EZHD_4, EZHD_5, EZHD_711 – EZHD_713	con.23	Quick lock	180°	40°
EZHD_715	con.40	Quick lock	180°	40°

Encoder plug connector features

Motor type	Size	Connection	Turning range	
			α	β
EZHD	con.17	Quick lock	195°	35°

Notes

- The number after "con." indicates the approximate external thread diameter of the plug connector in mm (for example, con.23 designates a plug connector with an external thread diameter of about 23 mm).
- In turning range β, the power or encoder plug connectors can be turned only if doing so does not cause them to collide.

18.6.8.3 Connection assignment of the power plug connector

The size and connection plan of the power plug connector depend on the size of the motor. The colors of the connecting wires inside the motor are specified in accordance with IEC 60757.

Plug connector size con.23

Connection diagram	Pin	Connection	Color
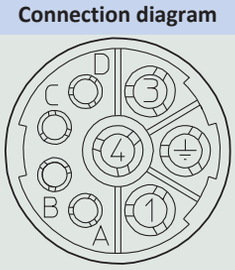	1	U phase	BK
	3	V phase	BU
	4	W phase	RD
	A	Brake +	RD
	B	Brake –	BK
	C	Temperature sensor +	
	D	Temperature sensor –	
	⏚	Grounding conductor	GNYE

Plug connector size con.40 (1.5)

Connection diagram	Pin	Connection	Color
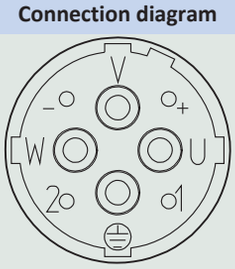	U	U phase	BK
	V	V phase	BU
	W	W phase	RD
	+	Brake +	RD
	–	Brake –	BK
	1	Temperature sensor +	
	2	Temperature sensor –	
	⏚	Grounding conductor	GNYE

18.6.8.4 Connection assignment of the encoder plug connector

The size and connection assignment of the encoder plug connectors depend on the model of encoder installed and the size of the motor. The colors of the connecting wires inside the motor are specified in accordance with IEC 60757.

EnDat 2.1/2.2 digital encoders, plug connector size con.17

Connection diagram	Pin	Connection	Color
	1	Clock +	VT
	2	Up sense	BNGN
	3		
	4		
	5	Data –	PK
	6	Data +	GY
	7		
	8	Clock –	YE
	9		
	10	0 V GND	WHGN
	11		
	12	Up +	BNGN

EnDat 2.2 digital encoder with battery buffering, plug connector size con.17

Connection diagram	Pin	Connection	Color
	1	Clock +	VT
	2	UBatt +	BU
	3	UBatt –	WH
	4		
	5	Data –	PK
	6	Data +	GY
	7		
	8	Clock –	YE
	9		
	10	0 V GND	WHGN
	11		
	12	Up +	BNGN
	UBatt+ = DC 3.6 V for encoder model EBI in combination with the AES option of STOBER drive controllers		

EnDat 2.1 encoder with sin/cos incremental signals, plug connector size con.17

Connection diagram	Pin	Connection	Color
	1	Up sense	BU
	2		
	3		
	4	0 V sense	WH
	5		
	6		
	7	Up +	BNGN
	8	Clock +	VT
	9	Clock –	YE
	10	0 V GND	WHGN
	11		
	12	B + (Sin +)	BUBK
	13	B – (Sin –)	RDBK
	14	Data +	GY
	15	A + (Cos +)	GNBK
	16	A – (Cos –)	YEBK
	17	Data –	PK

18.7 Project configuration

Project your drives using our SERVOsoft designing software. Download SERVOsoft for free at https://www.stoeber.de/en/ServoSoft.

Observe the limit conditions in this chapter to ensure a safe design for your drives.

An explanation of the formula symbols can be found in Chapter [▶ 23.1].

The formula symbols for values actually present in the application are marked with *.

18.7.1 Calculation of the operating point

In this chapter, you can find information needed to calculate the operating point.

Check the following conditions for operating points other than the nominal point M_N specified in the selection tables:

$n_{m*} \leq n_N$

$M_{eff*} \leq M_{limK}$

$M_{max*} < M_{max}$

The values for M_N, n_N, M_{max} can be found in the selection tables.

The values for M_{limK} can be found in the torque/speed characteristic curves.

Example of cyclic operation

The following calculations refer to a representation of the power delivered at the motor shaft based on the following example:

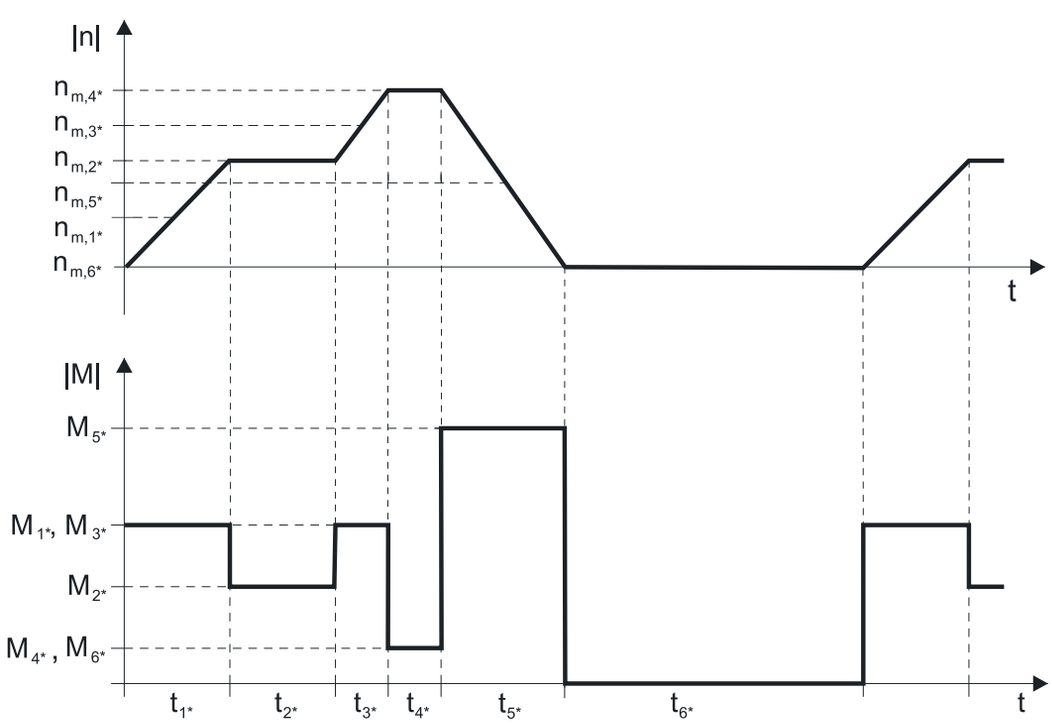

Calculation of the actual average input speed

$$n_{m*} = \frac{|n_{m,1*}| \cdot t_{1*} + \ldots + |n_{m,n*}| \cdot t_{n*}}{t_{1*} + \ldots + t_{n*}}$$

If $t_{1*} + \ldots + t_{5*} \geq 6$ min, determine n_{m*} without the rest phase t_{6*}.

Calculation of the actual effective torque

$$M_{eff*} = \sqrt{\frac{t_{1*} \cdot M_{1*}^2 + \ldots + t_{n*} \cdot M_{n*}^2}{t_{1*} + \ldots + t_{n*}}}$$

18.7.2 Permitted shaft loads

This chapter contains information about the maximum permitted shaft loads of the output shaft of the motor.

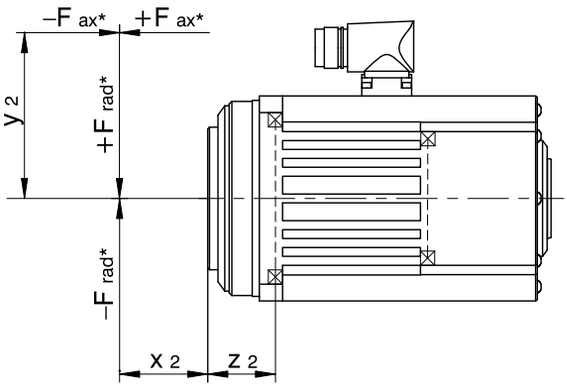

Type	z_2 [mm]	F_{ax300} [N]	F_{rad300} [N]	M_{k300} [Nm]	C_{2k} [Nm/arcmin]
EZHD0411	29.5	1600	3400	102	60
EZHD0412	29.5	1600	3700	109	66
EZHD0414	29.5	1600	4000	118	44
EZHD0511	30.0	4500	3400	102	111
EZHD0512	30.0	4500	3600	108	126
EZHD0513	30.0	4500	3750	113	130
EZHD0515	30.0	4500	4000	120	122
EZHD0711	41.5	7000	5000	208	212
EZHD0712	41.5	7000	5300	220	256
EZHD0713	41.5	7000	5500	229	287
EZHD0715	41.5	7000	5800	241	315

The values for permitted shaft loads specified in the table apply:

- For shaft dimensions in accordance with the catalog
- Output speed $n_{m*} \leq 300$ rpm ($F^{ax} = F_{ax300}$; $F_{rad} = F_{rad300}$; $M_k = M_{k300}$)
- Only if pilots are used (housing, flange hollow shaft)

The following applies to output speeds $n_{m*} > 300$ rpm:

$$F_{ax} = \frac{F_{ax300}}{\sqrt[3]{\frac{n_{m*}}{300\ \text{rpm}}}} \qquad F_{rad} = \frac{F_{rad300}}{\sqrt[3]{\frac{n_{m*}}{300\ \text{rpm}}}} \qquad M_k = \frac{M_{k300}}{\sqrt[3]{\frac{n_{m*}}{300\ \text{rpm}}}}$$

The following applies to other force application points:

$$M_{k*} = \frac{F_{ax*} \cdot y_2 + F_{rad*} \cdot (x_2 + z_2)}{1000} \leq M_{k300}$$

$$F_{rad*} \leq F_{rad300}$$

$$F_{ax*} \leq F_{ax300}$$

For applications with multiple axial and/or radial forces, you must add the forces as vectors.

18.7.3 Derating

If you use the motor under ambient conditions that differ from the standard ambient conditions, the nominal torque M_N of the motor is reduced. In this chapter, you can find information for calculating the reduced nominal torque.

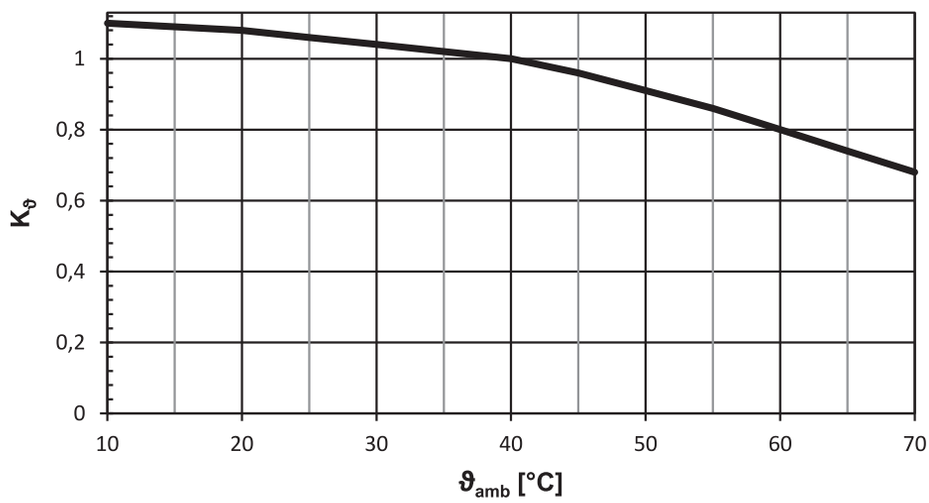

Fig. 5: Derating depending on the surrounding temperature

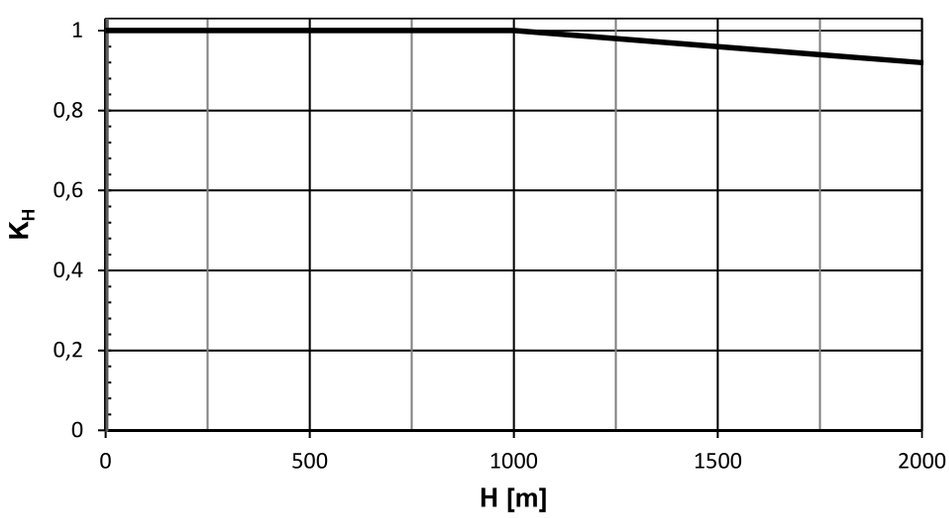

Fig. 6: Derating depending on the installation height

Calculation

If surrounding temperature ϑ_{amb} > 40 °C:

$M_{Nred} = M_N \cdot K_\vartheta$

If installation altitude H > 1000 m above sea level:

$M_{Nred} = M_N \cdot K_H$

If the surrounding temperature ϑ_{amb} > 40 °C and installation altitude H > 1000 m above sea level:

$M_{Nred} = M_N \cdot K_H \cdot K_\vartheta$

18.8 Further information

18.8.1 Directives and standards

STOBER synchronous servo motors meet the requirements of the following directives and standards:

- (Low Voltage) Directive 2014/35/EU
- EN 60034-1:2010 + Cor.:2010
- EN 60034-5:2001 + A1:2007
- EN 60034-6:1993

18.8.2 Identifiers and test symbols

STOBER synchronous servo motors have the following identifiers and test symbols:

CE mark: The product meets the requirements of EU directives.

cURus test symbol "Servo and Stepper Motors – Component"; registered under UL number E488992 with Underwriters Laboratories USA (optional).

18.8.3 Additional documentation

Additional documentation related to the product can be found at
http://www.stoeber.de/en/downloads/

Enter the ID of the documentation in the Search... field.

Documentation	ID
Operating manual for EZ synchronous servo motors	443032_en

19 EZM synchronous servo motors for screw drives

Table of contents

19.1 Overview ... 578

19.2 Selection tables ... 579

19.2.1 Mass moments of inertia and weights ... 579

19.3 Torque/speed curves ... 580

19.4 Dimensional drawings ... 583

19.4.1 EZM motors ... 583

19.5 Type designation ... 584

19.6 Product description ... 585

19.6.1 General features ... 585

19.6.2 Electrical features ... 585

19.6.3 Ambient conditions ... 586

19.6.4 Threaded nut ... 586

19.6.5 Threaded spindle ... 586

19.6.6 Encoders ... 587

19.6.7 Temperature sensor ... 588

19.6.8 Cooling ... 589

19.6.9 Holding brake ... 590

19.6.10 Connection method ... 591

19.7 Project configuration ... 594

19.7.1 Design of the screw drive ... 594

19.7.2 Calculation of the operating point ... 595

19.7.3 Calculation of the bearing service life ... 597

19.8 Further information ... 597

19.8.1 Directives and standards ... 597

19.8.2 Identifiers and test symbols ... 597

19.8.3 Additional documentation ... 598

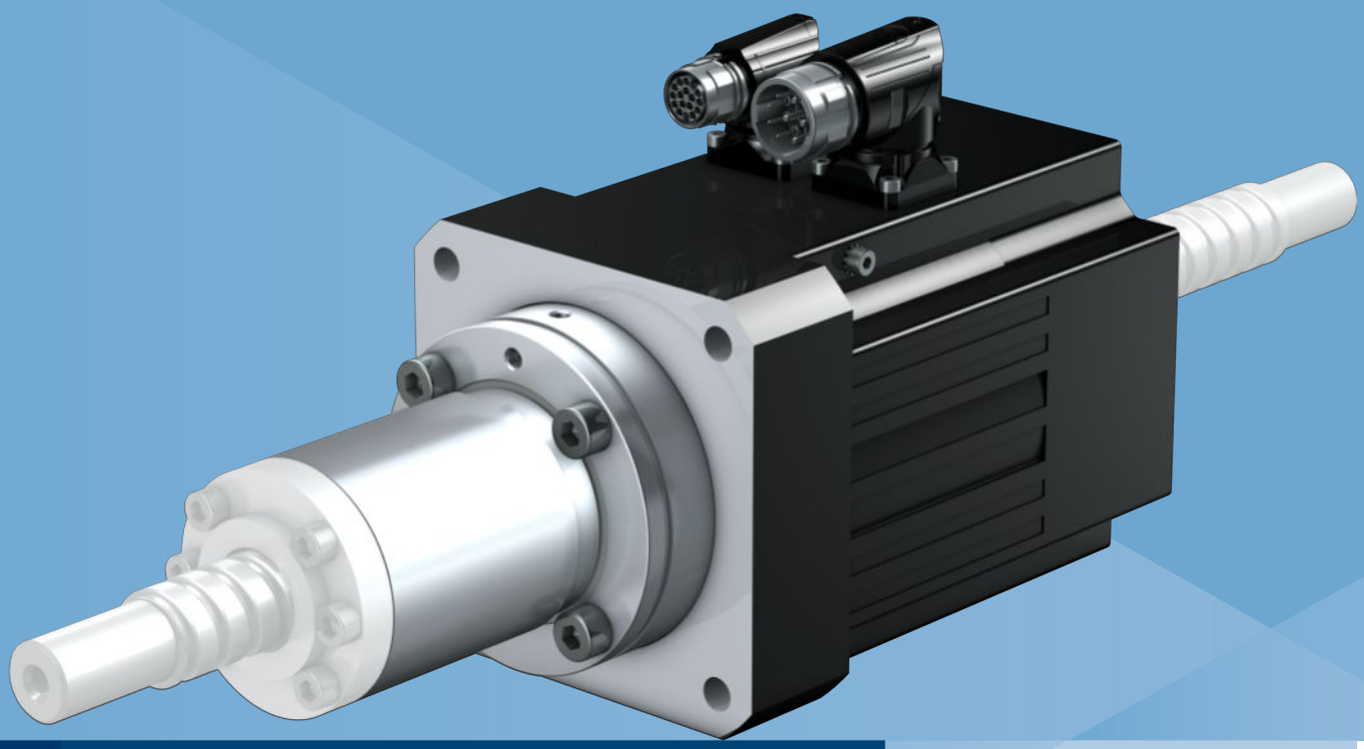

19

Synchronous servo motors for screw drives

EZM

19.1 Overview

Synchronous servo motor for screw drives (direct drive for threaded nut)

Features

Designed for driving the ball-threaded nut of ball screws in accordance with DIN 69051-2.	✓
Axial angular contact ball bearing acting on two sides for direct absorption of the threaded spindle forces	✓
Super compact due to tooth-coil winding method with the highest possible copper fill factor	✓
Backlash-free holding brake (optional)	✓
Convection cooling	✓
Inductive EnDat absolute encoders	✓
Elimination of referencing with multi-turn absolute encoders (optional)	✓
Electronic nameplate for fast and reliable commissioning	✓
Rotatable plug connectors with quick lock	✓

Axial forces

F_{ax}	751 – 21375 N

19.2 Selection tables

The technical data specified in the selection tables applies to:

- Installation altitudes up to 1000 m above sea level
- Surrounding temperatures from −15 °C to +40 °C
- Operation on a STOBER drive controller
- DC link voltage U_{ZK} = DC 540 V
- Coating: RAL 9005 Jet black, matte

In addition, the technical data applies to an uninsulated design with the following thermal mounting conditions:

Type	Dimensions of steel mounting flange (thickness x width x height)	Convection surface area Steel mounting flange
EZM5	23 x 210 x 275 mm	0.16 m^2
EZM7	28 x 300 x 400 mm	0.3 m^2

Formula symbols

An explanation of the formula symbols can be found in Chapter [▶ 23.1].

Observe the additional information on the following formula symbols:

- I_0 = RMS value of the line-to-line current when stall torque M_0 is generated (tolerance ±5%).
- I_{max} = RMS value of the short-term maximum permitted line-to-line current when maximum torque M_{max} is generated (tolerance ±5%). Exceeding I_{max} may lead to irreversible damage (demagnetization) of the rotor.
- I_N = RMS value of the line-to-line current when nominal torque M_N is generated at the nominal point (tolerance ±5%).
- M_0 = Torque that a motor is continuously able to deliver at a speed of 10 rpm (tolerance ±5%). At a speed of 0 rpm, a minor continuous torque has to be taken into account. Contact your STOBER customer advisor for such an application.

Type	K_{EM} [V/1000 rpm]	n_N [rpm]	M_N [Nm]	I_N [A]	$K_{M,N}$ [Nm/A]	P_N [kW]	M_0 [Nm]	I_0 [A]	K_{M0} [Nm/A]	M_R [Nm]	M_{max} [Nm]	I_{max} [A]	R_{U-V} [Ω]	L_{U-V} [mH]	T_{el} [ms]
EZM511U	97	3000	3.65	3.55	1.03	1.2	4.25	4.00	1.19	0.49	16.0	22.0	3.80	23.50	6.18
EZM512U	121	3000	6.60	5.20	1.27	2.1	7.55	5.75	1.40	0.49	31.0	33.0	2.32	16.80	7.24
EZM513U	119	3000	8.80	6.55	1.34	2.8	10.6	7.60	1.46	0.49	43.0	41.0	1.25	10.00	8.00
EZM711U	95	3000	6.35	6.60	0.96	2.0	7.30	7.40	1.07	0.65	20.0	25.0	1.30	12.83	9.87
EZM712U	133	3000	10.6	7.50	1.41	3.3	13.0	8.90	1.53	0.65	41.0	36.0	1.00	11.73	11.73
EZM713U	122	3000	14.7	10.4	1.41	4.6	18.9	13.0	1.50	0.65	65.0	62.0	0.52	6.80	13.08

19.2.1 Mass moments of inertia and weights

	df [mm]	ef [mm]	ef2 [mm]	J [kgcm²]	m [kg]
EZM511	40	51	65	20.3	9.9
EZM512	40	51	65	23.6	11.5
EZM513	40	51	65	26.8	13.1
EZM711	56	71	78	60.3	17.6
EZM711	50	65	78	53.7	17.4
EZM712	56	71	78	69.7	20.1
EZM712	50	65	78	63.1	19.9
EZM713	56	71	78	79.0	22.7
EZM713	50	65	78	72.4	22.5

19.3 Torque/speed curves

Torque/speed curves depend on the nominal speed and/or winding design of the motor and the DC link voltage of the drive controller that is used. The following torque/speed curves apply to the DC link voltage DC 540 V.

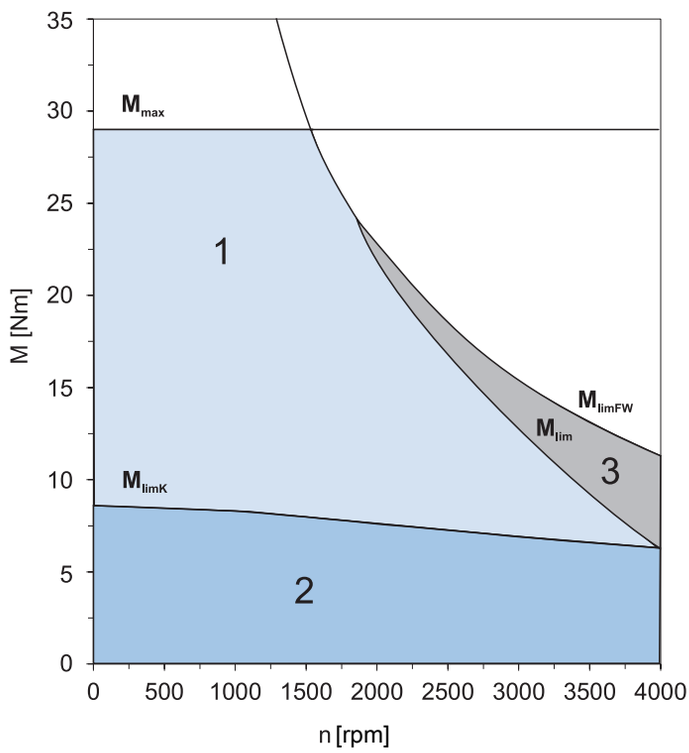

Fig. 1: Explanation of a torque/speed curve

1	Torque range for brief operation (ED_{10} < 100%) with Δϑ = 100 K	2	Torque range for continuous operation with constant load (S1 mode, ED_{10} = 100%) with Δϑ = 100 K
3	Field weakening range (can be used only with operation on STOBER drive controllers)		

EZM511 (n_N=3000 rpm)

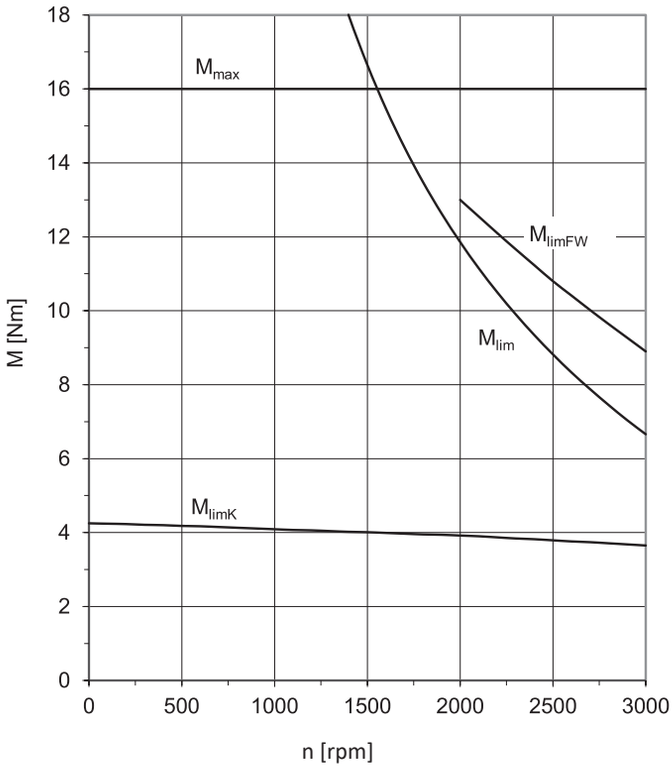

EZM512 (n_N=3000 rpm)

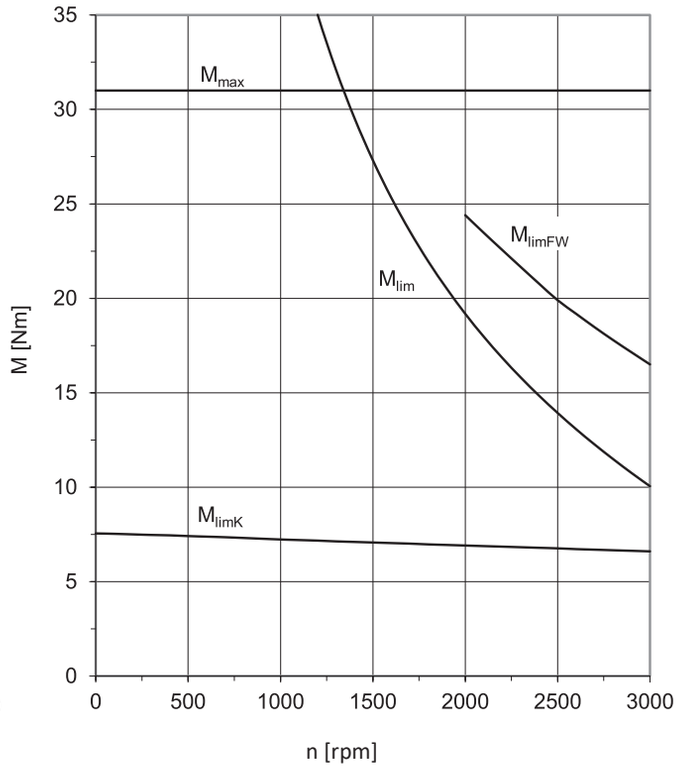

EZM513 (n_N=3000 rpm)

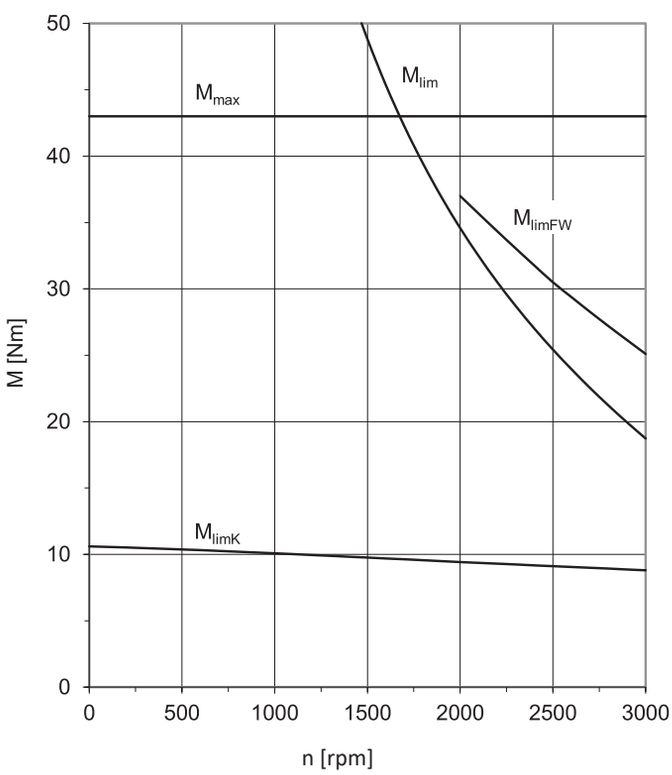

EZM711 (n_N=3000 rpm)

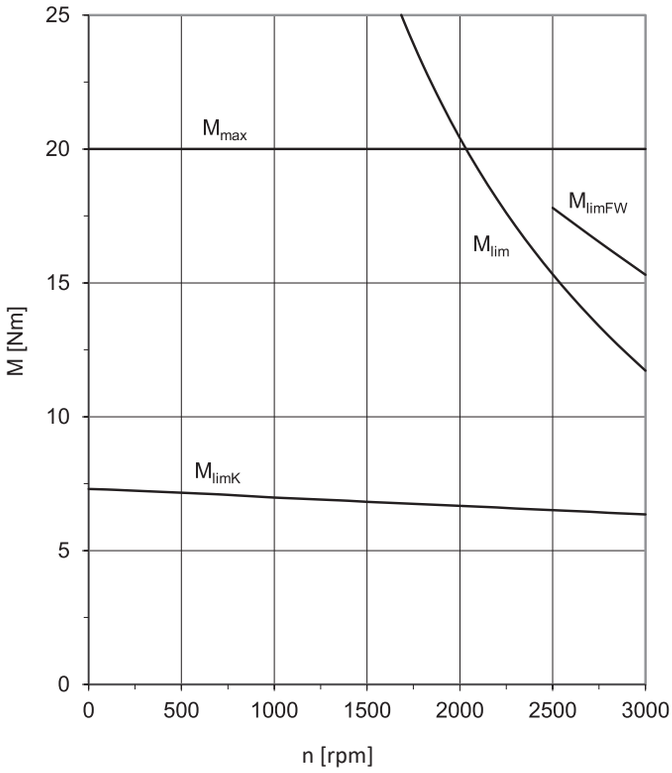

EZM712 (n_N=3000 rpm)

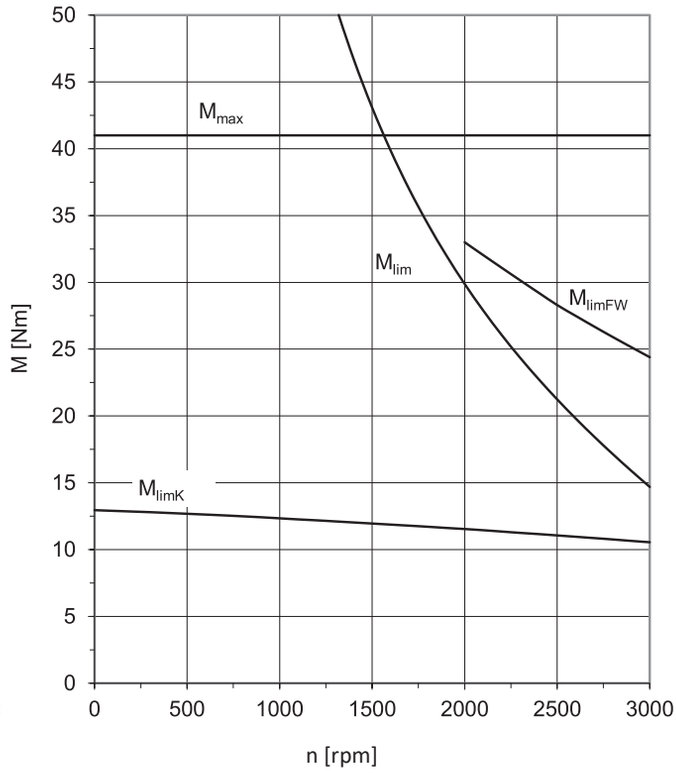

EZM713 (n_N=3000 rpm)

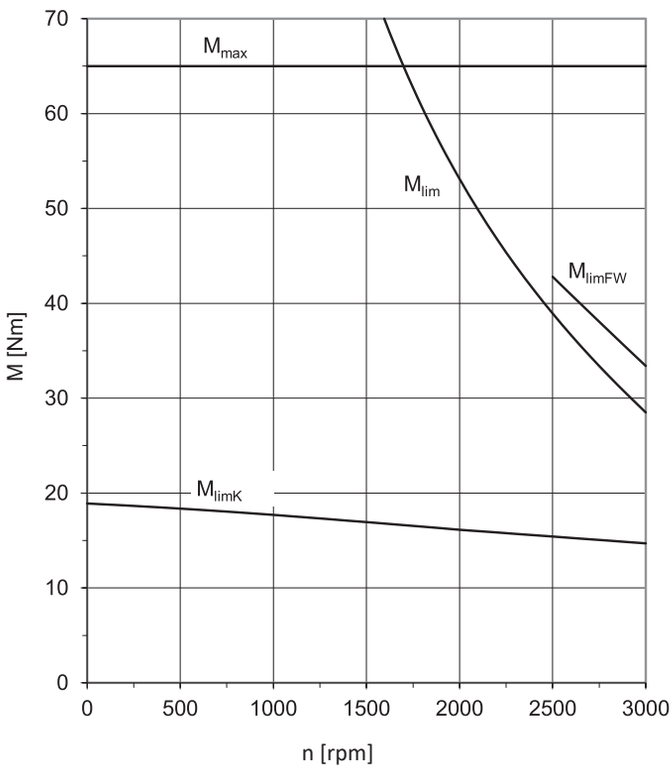

19.4 Dimensional drawings

In this chapter, you can find the dimensions of the motors.

Dimensions can exceed the specifications of ISO 2768-mK due to casting tolerances or accumulation of individual tolerances.

We reserve the right to make dimensional changes due to ongoing technical development.

You can download 3D models of our standard drives at http://configurator.stoeber.de.

In this chapter, the dimensions p1 and w1 for standard motor designs are presented. In designs for connection to drive controllers of third-party manufacturers, dimensions p1 and w1 may differ. You can find more details at http://configurator.stoeber.de.

19.4.1 EZM motors

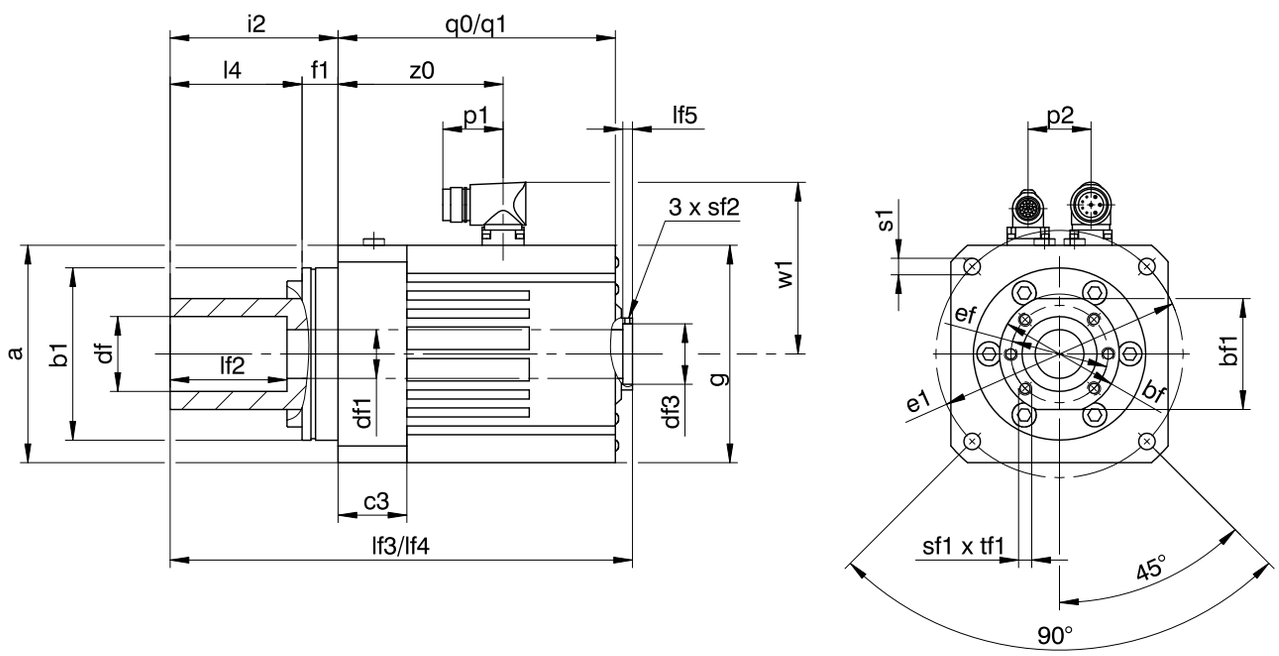

q0, lf3 Applies to motors without holding brake.

q1, lf4 Applies to motors with holding brake.

Type	□a	Øb1	Øbf	bf1	c3	Ødf	Ødf1	Ødf3	Øe1	Øef	f1	□g	i2	l4	lf2	lf3	lf4	lf5	p1	p2	q0	q1	Øs1	sf1	sf2	tf1	w1	z0
EZM511U	115	$90_{-0,01}$	62	59	37	40^{JS6}	25.5	32.3	130	51	24	115	98	74	66	279.0	333.0	4.4	40	36	170.1	225.4	9	M6	M3	12	100	95.5
EZM512U	115	$90_{-0,01}$	62	59	37	40^{JS6}	25.5	32.3	130	51	24	115	98	74	66	304.0	358.3	4.4	40	36	195.1	250.4	9	M6	M3	12	100	120.5
EZM513U	115	$90_{-0,01}$	62	59	37	40^{JS6}	25.5	32.3	130	51	24	115	98	74	66	329.0	383.3	4.4	40	36	220.1	275.4	9	M6	M3	12	100	145.5
EZM711U	145	$115_{-0,01}$	80	74	46	50^{JS6}	32.5	40.3	165	65	24	145	112	88	79	308.6	368.6	5.2	40	42	185.2	245.2	11	M8	M4	14	115	110.2
EZM712U	145	$115_{-0,01}$	80	74	46	50^{JS6}	32.5	40.3	165	65	24	145	112	88	79	333.6	393.6	5.2	40	42	210.2	270.2	11	M8	M4	14	115	135.2
EZM713U	145	$115_{-0,01}$	80	74	46	50^{JS6}	32.5	40.3	165	65	24	145	112	88	79	358.6	418.6	5.2	40	42	235.2	295.2	11	M8	M4	14	115	160.2
EZM711U	145	$115_{-0,01}$	86	80	46	56^{JS6}	32.5	40.3	165	71	24	145	112	88	79	308.6	368.6	5.2	40	42	185.2	245.2	11	M8	M4	14	115	110.2
EZM712U	145	$115_{-0,01}$	86	80	46	56^{JS6}	32.5	40.3	165	71	24	145	112	88	79	333.6	393.6	5.2	40	42	210.2	270.2	11	M8	M4	14	115	135.2
EZM713U	145	$115_{-0,01}$	86	80	46	56^{JS6}	32.5	40.3	165	71	24	145	112	88	79	358.6	418.6	5.2	40	42	235.2	295.2	11	M8	M4	14	115	160.2

19.5 Type designation

Example code

EZM	5	1	1	U	S	AD	B1	O	097

Explanation

Code	Designation	Design
EZM	Type	Synchronous servo motor for screw drives
5	Motor size	5 (example)
1	Generation	1
1	Length	1 (example)
U	Cooling	Convection cooling
S	Design	Standard
AD	Drive controller	SD6 (example)
B1	Encoder	EnDat 2.2 EBI 135 EnDat 2.2 (example)
O	Brake	Without holding brake
P		Permanent magnet holding brake
097	Voltage constant K_{EM}	97 V/1000 rpm (example)

Notes

- In Chapter [▸ 19.6.6], you can find information about available encoders.
- In Chapter [▸ 19.6.6.3], you can find information about connecting synchronous servo motors to other drive controllers from STOBER.
- In Chapter [▸ 21], you can find information about options for connecting STOBER synchronous servo motors to drive controllers from other manufacturers.

19.6 Product description

19.6.1 General features

Feature	EZM5	EZM7
Maximum threaded spindle diameter ∅dkg [mm]	25.00	32.00
Pitch of threaded spindle P_{st}	5 – 25	5 – 32
Pilot ∅Dkg [mm]	40	50/56
Bolt circle ∅ekg [mm]	51	65/71
Nominal speed n_N [rpm]	3000	3000
Bearing type[1]	INA ZKLF 3590-2Z[2]	INA ZKLF 50115-2Z[3]
Maximum bearing speed n_{la} [rpm]	3800	3000
Axial bearing load rating, dynamic C_{dyn} [N]	41000	46500
Axial rigidity C_{ax} [N/µm]	500	770
Shrink ring type	RINGFEDER RfN 4061 24 × 50	RINGFEDER RfN 4061 30× 60
Torque [Nm] that can be transmitted by the shrink ring	324	514
Axial force $F_{ax,ss}$ [N] that can be transmitted by the shrink ring	32000	41000
Surface pressure on the hub of the shrink ring [N/mm²]	272	228
Pin diameter of the threaded spindle dh1 [mm]	20	25
Protection class	IP40	IP40
Thermal class	155 (F) in accordance with EN 60034-1 (155 °C, heating Δϑ = 100 K)	
Surface[4]	Matte black as per RAL 9005	
Noise level	Limit values in accordance with EN 60034-9	
Cooling	IC 410 convection cooling	

19.6.2 Electrical features

General electrical features of the motor are described in this chapter. Details can be found in the "Selection tables" chapter.

Feature	Description
DC link voltage	DC 540 V (max. 620 V) on STOBER drive controllers
Winding	Three-phase, single-tooth coil design
Circuit	Star, center not led through
Protection class	I (protective grounding) in accordance with EN 61140
Impulse voltage insulation class (IVIC)	C in accordance with DIN EN 60034-18-41 (inverter connection voltage 0 – 480 V ± 10%)
Number of pole pairs	7

[1] Axial angular contact ball bearing for screw drives, grease-lubricated, can be relubricated

[2] Or comparable products from other providers

[3] Or comparable products from other providers

[4] Repainting the motor will change the thermal properties and therefore the performance limits.

19.6.3 Ambient conditions

Standard ambient conditions for transport, storage and operation of the motor are described in this chapter.

Feature	Description
Surrounding temperature for transport/storage	−30 °C to +85 °C
Surrounding temperature for operation	−15 °C to +40 °C
Relative humidity	5% to 95%, no condensation
Installation altitude	≤ 1000 m above sea level
Shock load	≤ 50 m/s^2 (5 g), 6 ms in accordance with EN 60068-2-27

Notes

- STOBER synchronous servo motors are not suitable for potentially explosive atmospheres.
- Secure the power cables close to the motor so that vibrations of the cable do not place impermissible loads on the motor plug connector.
- Note that the braking torques of the holding brake (optional) may be reduced by shock loading.
- At operating temperatures below 0 °C, note that the discs of the holding brake (optional) may ice up.

19.6.4 Threaded nut

The driven threaded nut (stationary mounting of threaded spindle) has the following advantages compared to the driven threaded spindle (stationary mounting of threaded nut):

- Higher axial velocity can be achieved with long threaded spindles because the swinging of the threaded spindle is less problematic.
- Drastic reduction in the power loss of the threaded spindle bearing because the stretching forces of the threaded spindle do not have to be channeled through the bearing.
- Liquid cooling of the threaded spindle is easier.
- Increased axial rigidity and torsional rigidity of the threaded spindle (especially with a high pitch/diameter ratio) because the axial forces and torques at both ends of the threaded spindle can be channeled to the surrounding structure.

19.6.4.1 Lubrication of the threaded nut

As the system makes supplying lubricant to the driven threaded nut difficult, it should be lubricated via the threaded spindle. The following options are available for this purpose.

- For threaded nut with axial motion: using a lubrication channel in the threaded spindle that is implemented axially parallel up to the tool change position of the threaded nut. Lubricant can be injected into the threaded nut through a cross-hole if it is correctly aligned in this position. The amount of lubricant is generally sufficient until the next tool change without any problems.
- For threaded spindle with axial motion: using lubrication brushes attached to the machine that are connected to the lubrication supply and dispense the lubricant to the threaded spindle as it moves axially.

Lubricants that enter into the inside of the motor can impair the function of the holding brake and encoder. Therefore, take the protection class of the synchronous servo motor into account when configuring your screw drive, especially when installing the synchronous servo motor vertically with the A side on top. For detailed information about lubricating the screw drive, contact your screw drive manufacturer.

19.6.5 Threaded spindle

The design of the EZM motor allows for the threaded spindle of the screw drive to be guided through the entire length of the motor. Contact between the threaded spindle and motor shaft during operation is not permitted. The dimensions of the EZM motor are designed so that they can incorporate threaded spindles with a maximum outer diameter that does not exceed the nominal diameter. Be aware when selecting your screw drive that there are spindle nut/threaded spindle combinations for which the maximum threaded spindle diameter exceeds the nominal diameter of the threaded nut or spindle nut. In this case, the attachment of the screw drive to the EZM motor is not permitted (also see the maximum threaded spindle diameter Ødkg feature in Chapter General features).

19.6.6 Encoders

STOBER synchronous servo motors can be designed with different encoder models. The following chapters include information for choosing the optimal encoder for your application.

19.6.6.1 Selection tool for EnDat interface

The following table offers a selection tool for the EnDat interface of absolute encoders.

Feature	EnDat 2.1	EnDat 2.2
Short cycle times	★★☆	★★★
Transfer of additional information along with the position value	–	✓
Expanded power supply range	★★☆	★★★
Key: ★★☆ = good, ★★★ = very good		

19.6.6.2 EnDat encoders

In this chapter, you can find detailed technical data for encoder models that can be selected with EnDat interface.

Encoders with EnDat 2.2 interface

Encoder model	Code	Measuring method	Recordable revolutions	Resolution	Position values per revolution
EnDat 2.2 EBI 135	B1	Inductive	65536	19 bit	524288
EnDat 2.2 ECI 119-G2	C9	Inductive	–	19 bit	524288

Encoders with EnDat 2.1 interface

Encoder model	Code	Measuring method	Recordable revolutions	Resolution	Position values per revolution	Periods per revolution
EnDat 2.1 ECI 119	C4	Inductive	–	19 bit	524288	Sin/Cos 32

Notes

- The encoder code is a part of the type designation of the motor.
- Multiple revolutions of the motor shaft can be recorded only using multi-turn encoders.
- The EnDat 2.2 EBI 135 encoder requires an external buffer battery so that absolute position information is retained after the power supply is turned off (AES option for STOBER drive controllers).

19.6.6.3 Possible combinations with drive controllers

The following table shows the options for combining STOBER drive controllers with selectable encoder models.

Drive controller		SDS 5000	MDS 5000	SDS 5000/ MDS 5000	SD6		SI6	SC6
Drive controller code		AA	AB	AC	AD	AE	**AP**	**AU**
Connection plan ID		442305	442306	442307	442450	442451	**442771**	**443052**
Encoder	**Encoder code**							
EnDat 2.2 EBI 135	B1	✓	✓	–	✓	–	✓	✓
EnDat 2.2 ECI 119-G2	C9	✓	✓	–	✓	–	✓	✓
EnDat 2.1 ECI 119	C4	–	–	✓	–	✓	–	–

Notes

- The drive controller and encoder codes are a part of the type designation of the motor (see the "Type designation" chapter).
- In Chapter [▸ 21], you can find information about options for connecting STOBER synchronous servo motors to drive controllers from other manufacturers.

19.6.7 Temperature sensor

In this chapter, you can find technical data for the temperature sensors that are installed in STOBER synchronous servo motors for implementing thermal winding protection. To prevent damage to the motor, always monitor the temperature sensor with appropriate devices that will turn off the motor if the maximum permitted winding temperature is exceeded.

Some encoders feature integrated temperature monitoring, the warning and switch-off thresholds of which may overlap with the corresponding values set for the temperature sensor in the drive controller. In some cases, this may result in an instance where an encoder with internal temperature monitoring forces the motor to shut down, even before the motor has reached its nominal data.

You can find information about the electrical connection of the temperature sensor in the "Connection method" chapter.

19.6.7.1 PTC thermistor

The PTC thermistor is installed as a standard temperature sensor in STOBER synchronous servo motors.

The PTC thermistor is a triple thermistor in accordance with DIN 44082 that can be used for monitoring the temperature of each winding phase. The resistance values in the following table and curve refer to a single thermistor in accordance with DIN 44081. These values must be multiplied by 3 for a triple thermistor in accordance with DIN 44082.

Feature	Description
Nominal response temperature ϑ_{NAT}	145 °C ± 5 K
Resistance R −20 °C up to ϑ_{NAT} − 20 K	≤ 250 Ω
Resistance R with ϑ_{NAT} − 5 K	≤ 550 Ω
Resistance R with ϑ_{NAT} + 5 K	≥ 1330 Ω
Resistance R with ϑ_{NAT} + 15 K	≥ 4000 Ω
Operating voltage	≤ DC 7.5 V
Thermal response time	< 5 s
Thermal class	155 (F) in accordance with EN 60034-1 (155 °C, heating Δϑ = 100 K)

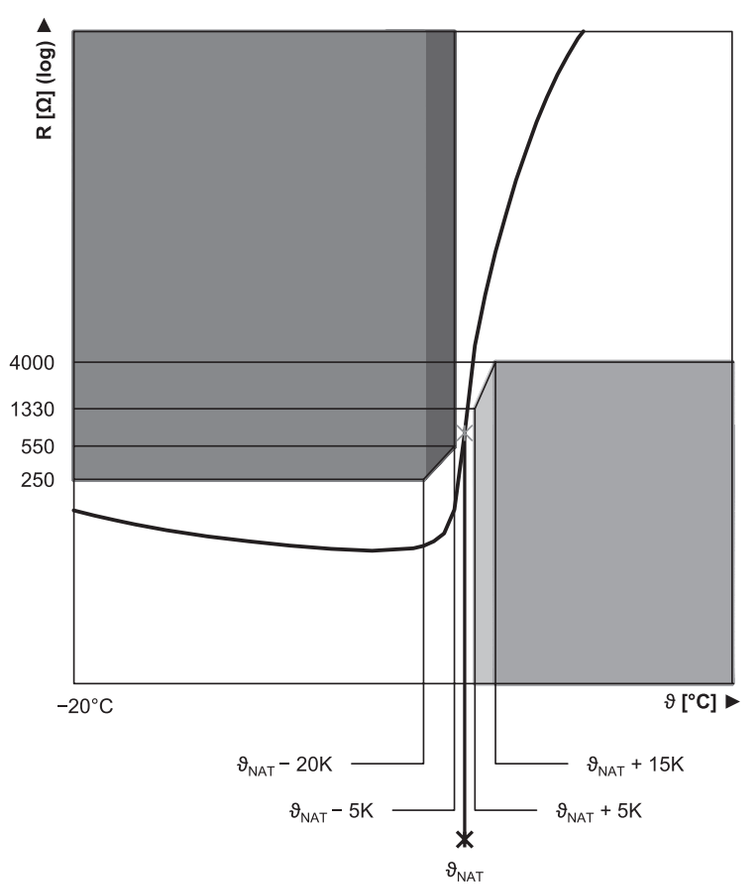

Fig. 2: PTC thermistor curve (single thermistor)

19.6.7.2 Pt1000 temperature sensor

STOBER synchronous servo motors are available in versions with a Pt1000 temperature sensor. The Pt1000 is a temperature-dependent resistor that has a resistance curve with a linear relationship with temperature. As a result, the Pt1000 allows for measurements of the winding temperature. These measurements are limited to one phase of the motor winding, however. In order to adequately protect the motor from exceeding the maximum permitted winding temperature, use a i^2t model in the drive controller to monitor the winding temperature.

Avoid exceeding the specified measurement current so that the measured values are not falsified due to self-heating of the temperature sensor.

Feature	Description
Measurement current (constant)	2 mA
Resistance R for ϑ = 0 °C	1000 Ω
Resistance R for ϑ = 80 °C	1300 Ω
Resistance R for ϑ = 150 °C	1570 Ω

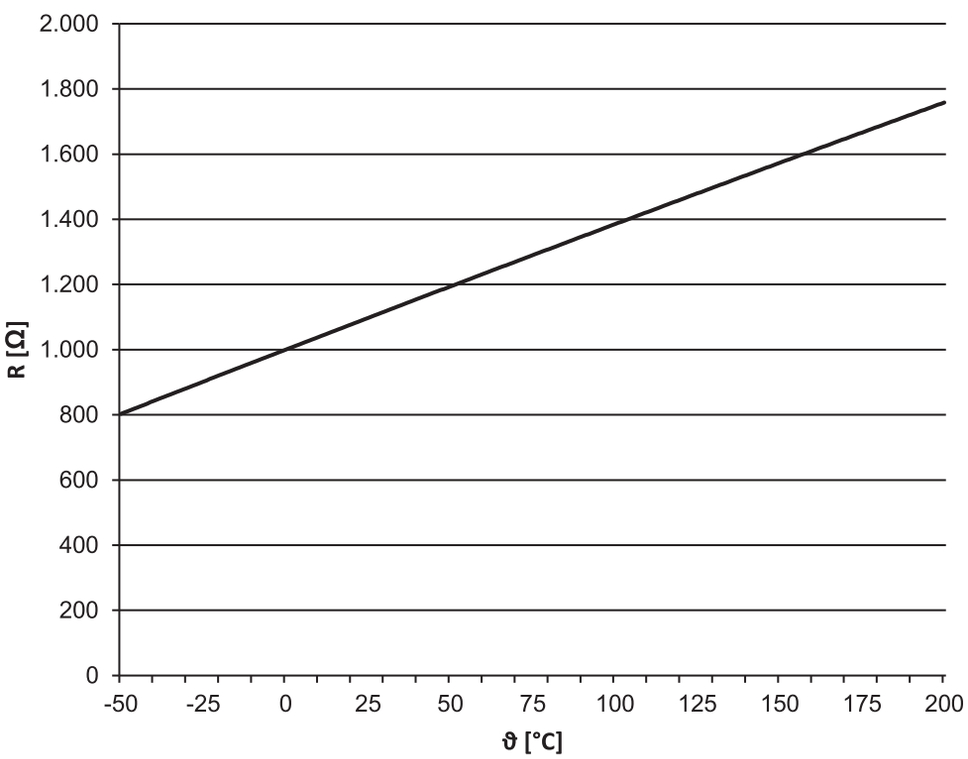

Fig. 3: Pt1000 temperature sensor characteristic curve

19.6.8 Cooling

An EZM motor is cooled by convection cooling (IC 410 in accordance with EN 60034-6).

19.6.9 Holding brake

STOBER synchronous servo motors can be equipped with a backlash-free holding brake using permanent magnets in order to secure the motor shaft when at a standstill. The holding brake engages automatically if the voltage drops.

The holding brake is designed for a high number of operations (B_{10} = 10 million operations, B_{10d} = 20 million operations).

Nominal voltage of permanent magnet holding brake: DC 24 V ± 5%, smoothed.

Observe the following during project configuration:

- The holding brake is designed to keep the motor shaft from moving. Activate braking processes during operation using the corresponding electrical functions of the drive controller. In exceptional circumstances, the holding brake can be used for braking from full speed (following a power failure or when setting up the machine). The maximum permitted work done by friction $W_{B,Rmax/h}$ may not be exceeded.
- Note that the braking torque M_{Bdyn} may initially be up to 50% less when braking from full speed. As a result, the braking effect has a delayed action and braking distances become longer.
- Regularly perform a brake test to ensure the functional safety of the brakes. Details can be found in the documentation of the motor and the drive controller.
- Connect a varistor of type S14 K35 (or comparable) in parallel to the brake coil to protect your machine from switching surges. (Not necessary for connecting the holding brake to STOBER drive controllers of the 5th and 6th generation with a BRS/BRM brake module).
- The holding brake of the motor does not offer adequate safety for persons in the hazardous area of gravity-loaded vertical axes. Therefore take additional measures to minimize risk, e.g. by providing a mechanical substructure for maintenance work.
- Take into consideration voltage losses in the connection cables that connect the voltage source to the holding brake connections.
- The holding torque of the brake can be reduced by shock loading. Information about shock loading can be found in the "Ambient conditions" chapter.
- At operating temperatures from −15 °C to 0 °C, a cold holding brake in the released state may cause operating noises. As the temperature of the holding brake increases, these noises decrease such that operating noises are not heard when using holding brake at operating temperature in the released state.

Calculation of work done by friction per braking process

$$W_{B,R/B} = \frac{J_{tot} \cdot n^2}{182.4} \cdot \frac{M_{Bdyn}}{M_{Bdyn} \pm M_L}, \; M_{Bdyn} > M_L$$

The sign of M_L is positive if the movement runs vertically upwards or horizontally and it is negative if the movement runs vertically down.

Calculation of the stop time

$$t_{dec} = 2.66 \cdot t_{1B} + \frac{n \cdot J_{tot}}{9.55 \cdot M_{Bdyn}}$$

Switching behavior

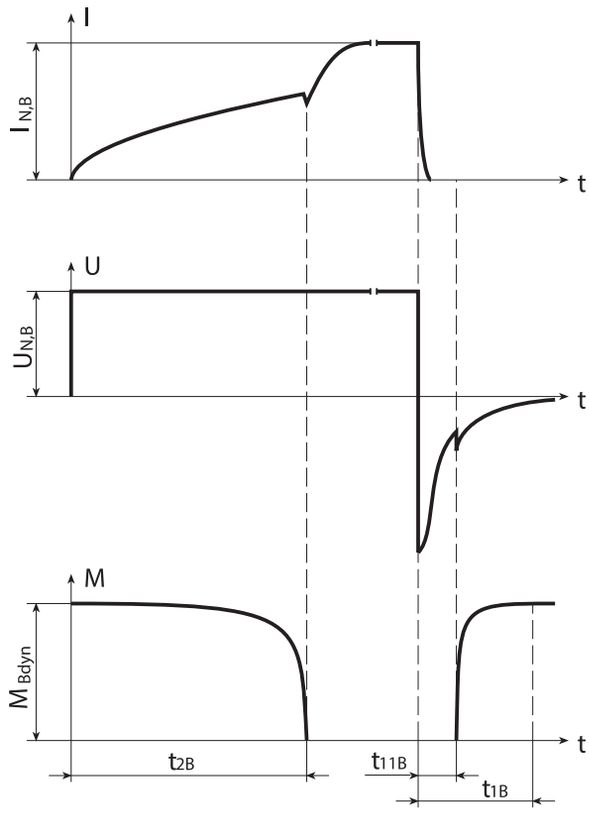

Fig. 4: Holding brake – Switching behavior

Technical data

Type	M_{Bstat} [Nm]	M_{Bdyn} [Nm]	$I_{N,B}$ [A]	$W_{B,Rmax/h}$ [kJ/h]	N_{Bstop}	J_{Bstop} [kgcm²]	$W_{B,Rlim}$ [kJ]	t_{2B} [ms]	t_{11B} [ms]	t_{1B} [ms]	$x_{B,N}$ [mm]	ΔJ_B [kgcm²]	Δm_B [kg]
EZM511	18	15	1.1	11.0	2100	52.5	550	55	3.0	30	0.3	5.970	2.50
EZM512	18	15	1.1	11.0	1850	59.1	550	55	3.0	30	0.3	5.970	2.50
EZM513	18	15	1.1	11.0	1700	65.5	550	55	3.0	30	0.3	5.970	2.50
EZM711	28	25	1.1	25.0	1900	149	1400	120	4.0	40	0.4	14.100	4.33
EZM712	28	25	1.1	25.0	1650	168	1400	120	4.0	40	0.4	14.100	4.33
EZM713	28	25	1.1	25.0	1500	186	1400	120	4.0	40	0.4	14.100	4.33

19.6.10 Connection method

The following chapters describe the connection technology of STOBER synchronous servo motors in the standard version on STOBER drive controllers. You can find further information relating to the drive controller type that was specified in your order in the connection plan that is delivered with every synchronous servo motor.

In Chapter [▸ 21], you can find information about options for connecting STOBER synchronous servo motors to drive controllers from other manufacturers.

19.6.10.1 Connection of the motor housing to the grounding conductor system

Connect the motor housing to the grounding conductor system of the machine in order to prevent personal injury and faulty triggering of residual current protective devices.

All attachment parts required for the connection of the grounding conductor to the motor housing are delivered with the motor. The grounding screw of the motor is identified with the symbol ⏚ in accordance with IEC 60417-DB. The cross-section of the grounding conductor has to be at least as large as the cross-section of the lines in the power connection.

19.6.10.2 Plug connectors

STOBER synchronous servo motors are equipped with rotatable quick-lock plug connectors in the standard version. Details can be found in this chapter.

The figures represent the position of the plug connectors upon delivery.

Turning ranges of plug connectors

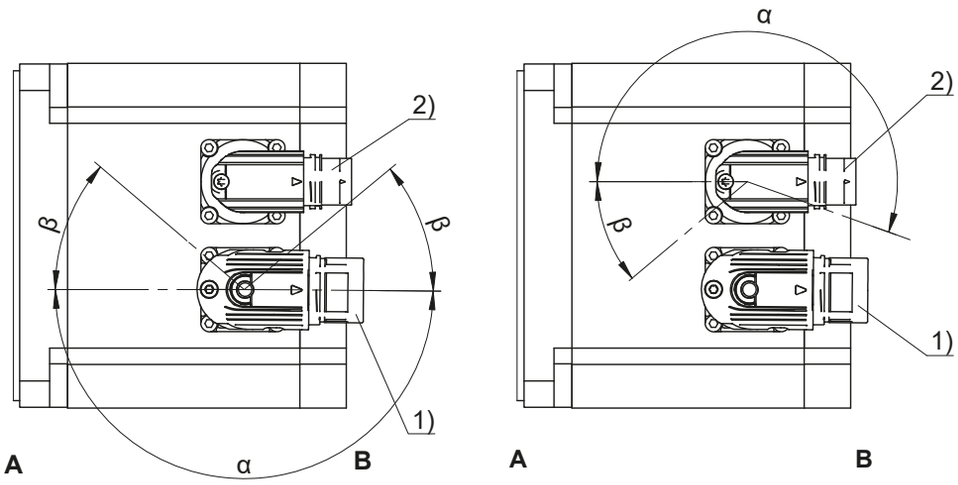

1	Power plug connector	2	Encoder plug connector
A	Attachment or output side of the motor	B	Rear side of the motor

Power plug connector features

Motor type	Size	Connection	Turning range	
			α	β
EZM	con.23	Quick lock	180°	40°

Encoder plug connector features

Motor type	Size	Connection	Turning range	
			α	β
EZM	con.17	Quick lock	195°	35°

Notes

- The number after "con." indicates the approximate external thread diameter of the plug connector in mm (for example, con.23 designates a plug connector with an external thread diameter of about 23 mm).
- In turning range β, the power or encoder plug connectors can be turned only if doing so does not cause them to collide.

19.6.10.3 Connection assignment of the power plug connector

The colors of the connecting wires inside the motor are specified in accordance with IEC 60757.

Plug connector size con.23

Connection diagram	Pin	Connection	Color
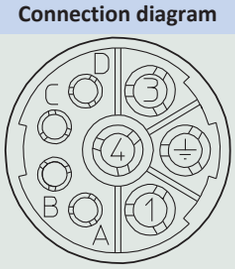	1	U phase	BK
	3	V phase	BU
	4	W phase	RD
	A	Brake +	RD
	B	Brake –	BK
	C	Temperature sensor +	
	D	Temperature sensor –	
	⏚	Grounding conductor	GNYE

19.6.10.4 Connection assignment of the encoder plug connector

The size and connection assignment of the encoder plug connectors depend on the model of encoder installed and the size of the motor. The colors of the connecting wires inside the motor are specified in accordance with IEC 60757.

EnDat 2.1/2.2 digital encoders, plug connector size con.17

Connection diagram	Pin	Connection	Color
	1	Clock +	VT
	2	Up sense	BNGN
	3		
	4		
	5	Data –	PK
	6	Data +	GY
	7		
	8	Clock –	YE
	9		
	10	0 V GND	WHGN
	11		
	12	Up +	BNGN

EnDat 2.2 digital encoder with battery buffering, plug connector size con.17

Connection diagram	Pin	Connection	Color
	1	Clock +	VT
	2	UBatt +	BU
	3	UBatt –	WH
	4		
	5	Data –	PK
	6	Data +	GY
	7		
	8	Clock –	YE
	9		
	10	0 V GND	WHGN
	11		
	12	Up +	BNGN
	UBatt+ = DC 3.6 V for encoder model EBI in combination with the AES option of STOBER drive controllers		

EnDat 2.1 encoder with sin/cos incremental signals, plug connector size con.17

Connection diagram	Pin	Connection	Color
	1	Up sense	BU
	2		
	3		
	4	0 V sense	WH
	5		
	6		
	7	Up +	BNGN
	8	Clock +	VT
	9	Clock –	YE
	10	0 V GND	WHGN
	11		
	12	B + (Sin +)	BUBK
	13	B – (Sin –)	RDBK
	14	Data +	GY
	15	A + (Cos +)	GNBK
	16	A – (Cos –)	YEBK
	17	Data –	PK

19.7 Project configuration

Information about drive project configuration can be found in the following chapters. For safe operation, be sure to comply with the following limit values during the project configuration for your drive:

- Permitted mechanical load of the shrink ring that connects the motor shaft to the threaded spindle (see the chapter Design of the screw drive)
- Permitted thermal load of the motor (see the chapter Calculation of the operating point)
- Permitted bearing load and achievable service life (see the chapter Calculation of the service life).

An explanation of the formula symbols can be found in Chapter [▸ 23.1].

19.7.1 Design of the screw drive

You can use the information below to select a suitable synchronous servo motor for your screw drive. For detailed design information on the screw drive, please contact the screw drive manufacturer.

Axial velocity

The axial velocity of a screw drive can be calculated as follows:

$$v_{ax} = \frac{n_{mot} \cdot P_{st}}{60}$$

The following diagram represents the characteristic curves of screw drives with common pitches that can be implemented with STOBER synchronous servo motors for screw drives.

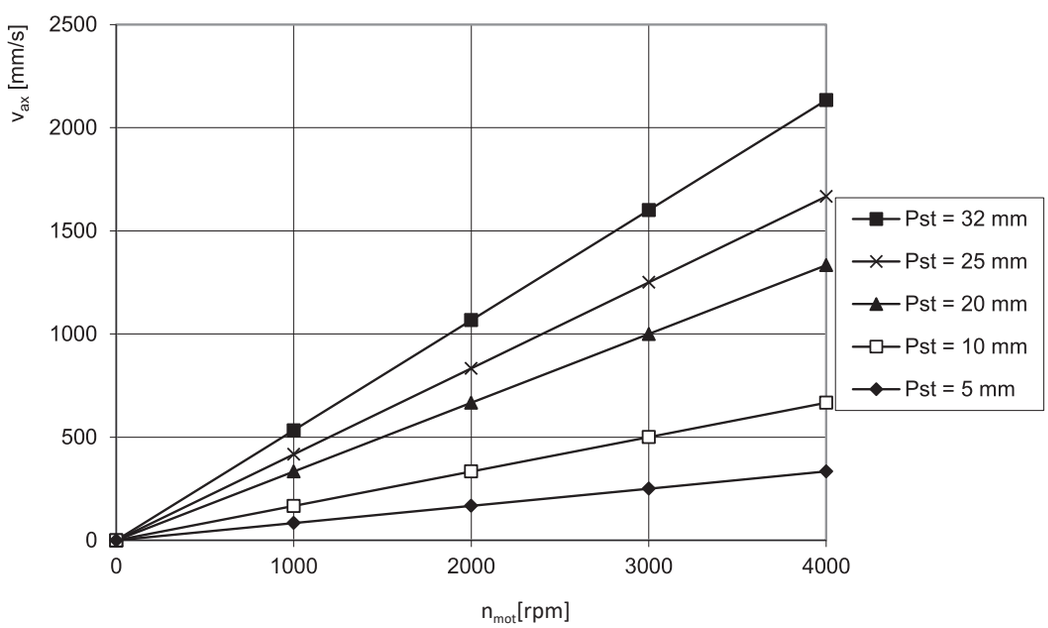

Axial force

The axial force of a screw drive can be calculated as follows:

$$F_{ax} = \frac{2000 \cdot M \cdot \pi \cdot \eta_{gt}}{P_{st}}$$

With a spindle pitch P_{st} = 5, the shrink ring between the motor shaft and threaded spindle can be overloaded when using the maximum torque of EZ502, EZ503, EZ702 or EZ703 motors. To prevent this, the following condition for the maximum permitted axial force F_{ax} must be observed in these application cases. Values for $F_{ax,ss}$ and dh1 can be found in the chapter General features. For more details on the shrink ring, contact the manufacturer Ringfeder.

$$F_{ax} \leq \frac{F_{ax,ss}}{1 + \frac{P_{st}}{\pi \cdot \eta_{gt} \cdot dh1}}$$

You can use the following table to select a motor type / screw drive pitch combination. The axial forces in the table are calculated for M_0 and η_{gt} = 0.9.

	M_0 [Nm]	F_{ax0} P_{st}=5 [N]	F_{ax0} P_{st}=10 [N]	F_{ax0} P_{st}=15 [N]	F_{ax0} P_{st}=20 [N]	F_{ax0} P_{st}=25 [N]	F_{ax0} P_{st}=32 [N]
EZM501U	4.3	4807	2403	1602	1202	961	751
EZM502U	7.6	8539	4269	2846	2135	1708	1334
EZM503U	10.6	11988	5994	3996	2997	2398	1873
EZM511U	4.3	4807	2403	1602	1202	961	751
EZM512U	7.6	8539	4269	2846	2135	1708	1334
EZM513U	10.6	11988	5994	3996	2997	2398	1873
EZM701U	7.3	8256	4128	2752	2064	1651	1290
EZM702U	12.9	14590	7295	4863	3647	2918	2280
EZM703U	18.9	21375	10688	7125	5344	4275	3340
EZM711U	7.3	8256	4128	2752	2064	1651	1290
EZM712U	13.0	14646	7323	4882	3662	2929	2288
EZM713U	18.9	21375	10688	7125	5344	4275	3340

If the synchronous servo motor at absolute standstill (n_{mot}=0) must hold the load using its torque, the following formula defines the permitted axial force:

$$F_{ax0,abs} \leq 0.6 \cdot \frac{2000 \cdot M_0 \cdot \pi \cdot \eta_{gt}}{P_{st}}$$

19.7.2 Calculation of the operating point

In this chapter, you can find information needed to calculate the operating point.

The following calculations refer to a representation of the power delivered at the motor shaft based on the following example:

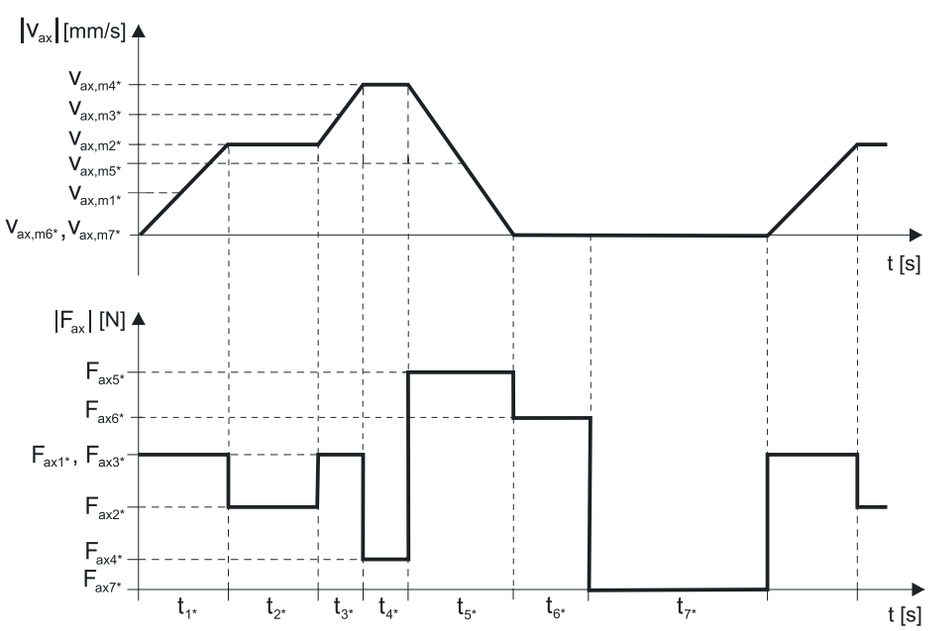

Calculation of the actual average axial velocity

$$v_{ax,m*} = \frac{|v_{ax,m1*}| \cdot t_{1*} + \ldots + |v_{ax,mn*}| \cdot t_{n*}}{t_{1*} + \ldots + t_{n*}}$$

If $t_{1*} + \ldots + t_{6*} \geq 6$ min, determine $v_{ax,m*}$ without the rest phase t_{7*}.

Calculation of the actual average speed

$$n_{m*} = \frac{v_{ax,m*} \cdot 60}{P_{st}}$$

Check the condition $n_{m*} \leq n_N$ and adjust the parameters as needed.

Calculation of the actual effective axial force

$$F_{ax,eff*} = \sqrt{\frac{t_{1*} \cdot F_{ax1*}^{2} + \ldots + t_{n*} \cdot F_{ax,n*}^{2}}{t_{1*} + \ldots + t_{n*}}}$$

Calculation of the actual effective torque

$$M_{eff*} = \frac{F_{ax,eff*} \cdot P_{st}}{2000 \cdot \pi \cdot \eta_{gt}}$$

You can find the value for the torque of the motor at operating point M_{op} with the determined average input speed n_{m*} in the motor curve in Chapter [▶ 19.3]. In doing so, keep the size of the motor in mind. The figure below shows an example of reading the torque M_{op} of a motor at the operating point.

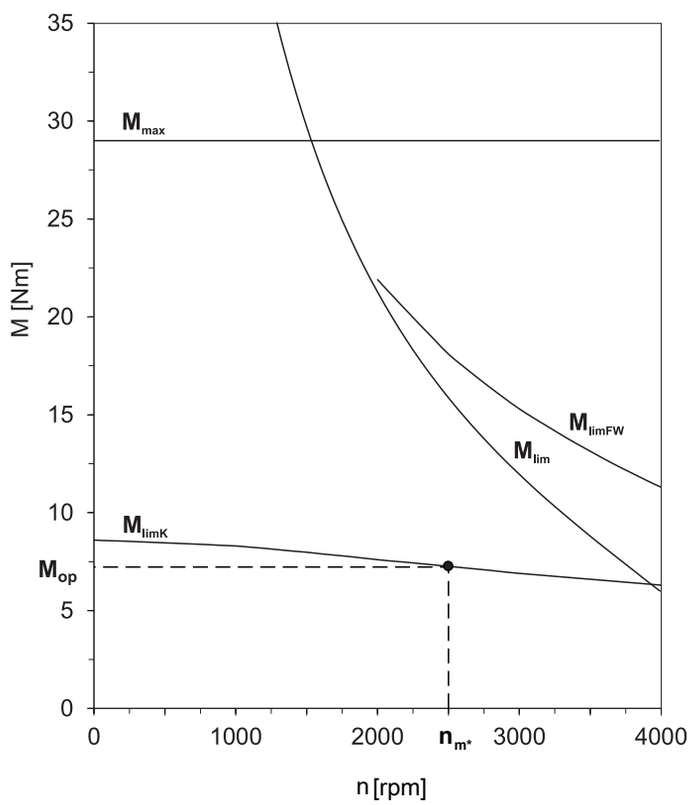

Check the condition: $M_{eff*} \leq M_{op}$ and adjust the parameters as needed.

19.7.3 Calculation of the bearing service life

The service life of the axial angular contact ball bearing of a STOBER synchronous servo motor for screw drives is generally longer than the service life of the screw drive bearing.

You can calculate the service life of the axial angular contact ball bearing as follows (the value for C_{dyn} can be found in the "General features" chapter):

$$L_{10} = \left(\frac{C_{dyn}}{F_{ax,eff*}} \right)^3 \cdot 10^6$$

The following diagram shows the bearing service life L_{10}.

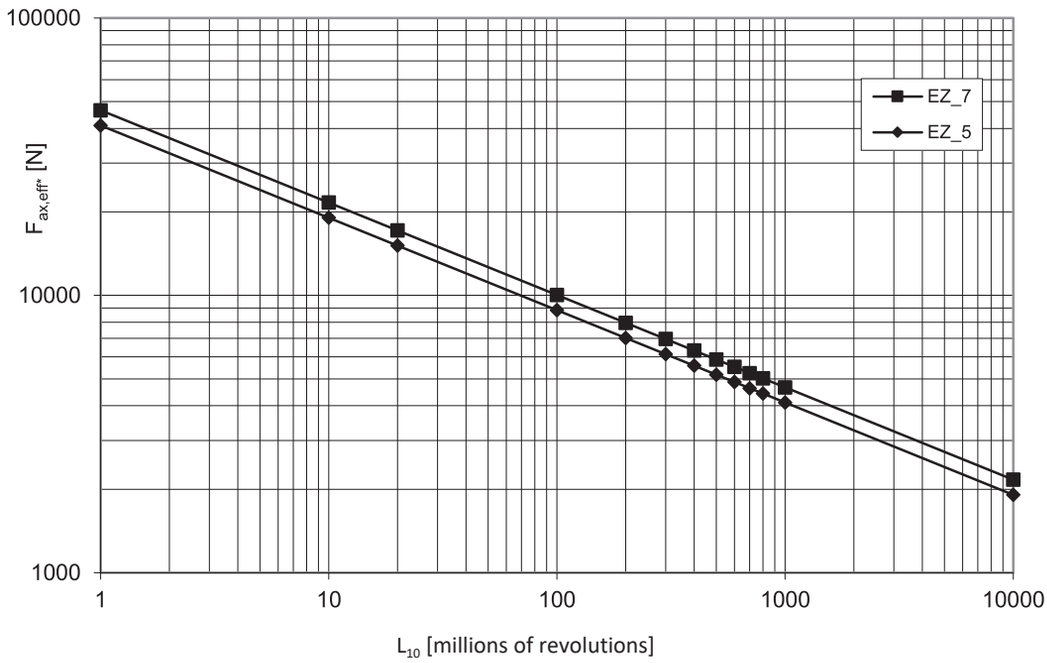

$$L_{10h} = \frac{L_{10}}{n_{m*} \cdot 60}$$

19.8 Further information

19.8.1 Directives and standards

STOBER synchronous servo motors meet the requirements of the following directives and standards:

- (Low Voltage) Directive 2014/35/EU
- EN 60034-1:2010 + Cor.:2010
- EN 60034-5:2001 + A1:2007
- EN 60034-6:1993

19.8.2 Identifiers and test symbols

STOBER synchronous servo motors have the following identifiers and test symbols:

CE mark: The product meets the requirements of EU directives.

cURus test symbol "Servo and Stepper Motors – Component"; registered under UL number E488992 with Underwriters Laboratories USA (optional).

19.8.3 Additional documentation

Additional documentation related to the product can be found at
http://www.stoeber.de/en/downloads/

Enter the ID of the documentation in the Search... field.

Documentation	ID
Operating manual for EZ synchronous servo motors	443032_en

20 EZS synchronous servo motors for screw drives

Table of contents

20.1 Overview ... 600

20.2 Selection tables ... 601

20.2.1 EZS motors with convection cooling ... 601

20.2.2 EZS motors with forced ventilation ... 601

20.3 Torque/speed curves ... 602

20.4 Dimensional drawings ... 605

20.4.1 EZS motors with convection cooling (One Cable Solution) ... 605

20.4.2 EZS motors with convection cooling ... 606

20.4.3 EZS motors with forced ventilation (One Cable Solution) ... 607

20.4.4 EZS motors with forced ventilation ... 608

20.5 Type designation ... 609

20.6 Product description ... 609

20.6.1 General features ... 609

20.6.2 Electrical features ... 610

20.6.3 Ambient conditions ... 610

20.6.4 Lubrication of the screw drive ... 610

20.6.5 Encoders ... 610

20.6.6 Temperature sensor ... 613

20.6.7 Cooling ... 614

20.6.8 Holding brake ... 615

20.6.9 Connection method ... 616

20.7 Project configuration ... 620

20.7.1 Design of the screw drive ... 620

20.7.2 Calculation of the operating point ... 622

20.7.3 Calculation of the bearing service life ... 623

20.8 Further information ... 624

20.8.1 Directives and standards ... 624

20.8.2 Identifiers and test symbols ... 624

20.8.3 Additional documentation ... 624

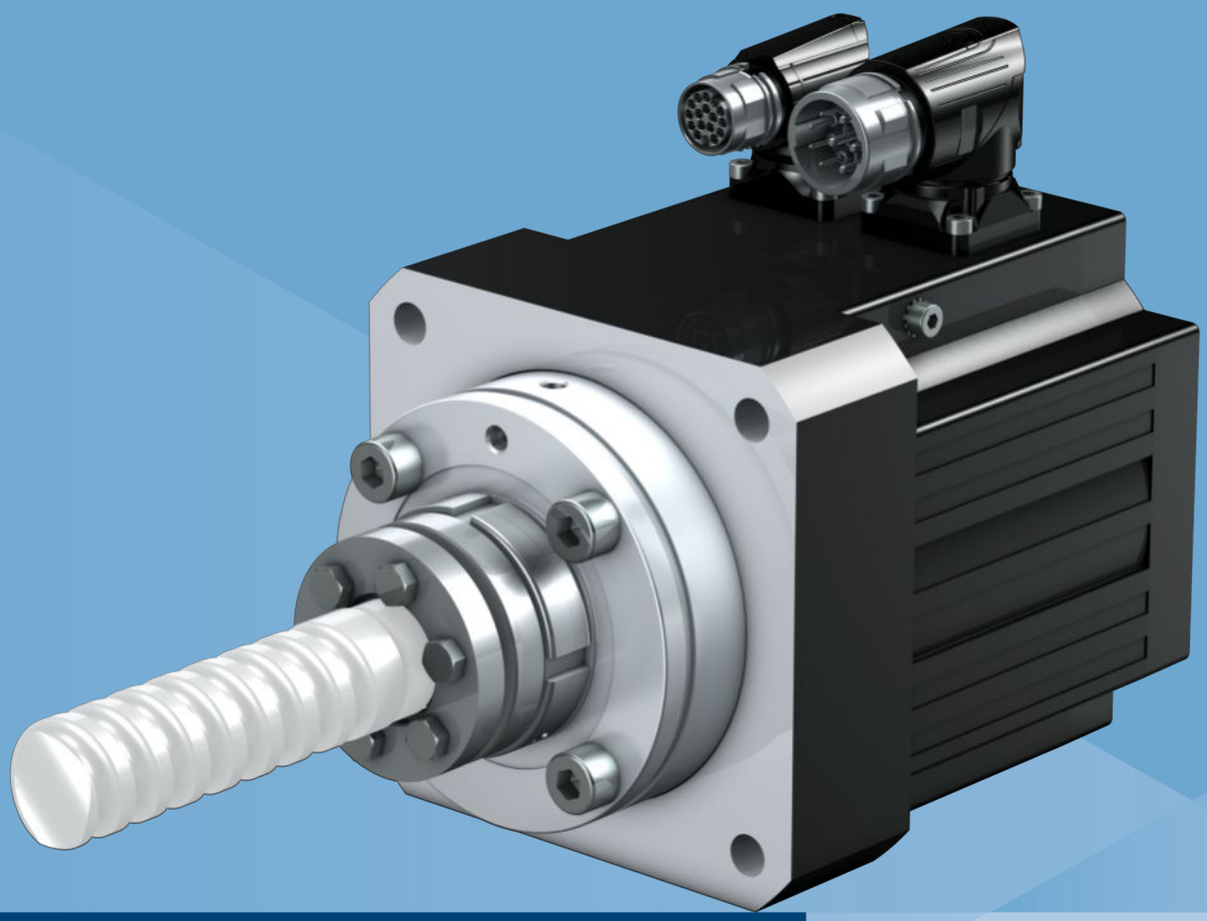

20

Synchronous servo motors for screw drives

EZS

20.1 Overview

Synchronous servo motors for screw drives (direct drive for threaded spindle)

Features

Backlash-free connection with the threaded spindle using a clamping unit	✓
Axial angular contact ball bearing acting on two sides for direct absorption of the threaded spindle forces	✓
Super compact due to tooth-coil winding method with the highest possible copper fill factor	✓
Backlash-free holding brake (optional)	✓
Convection cooling or forced ventilation (optional)	✓
Optical, inductive EnDat absolute encoders or resolvers	✓
Elimination of referencing with multi-turn absolute encoders (optional)	✓
One Cable Solution (OCS) with EnDat 3 encoder (optional)	✓
Electronic nameplate for fast and reliable commissioning	✓
Rotatable plug connectors with quick lock	✓

Axial forces

F_{ax}	760 – 31271 N

20.2 Selection tables

The technical data specified in the selection tables applies to:

- Installation altitudes up to 1000 m above sea level
- Surrounding temperatures from −15 °C to +40 °C
- Operation on a STOBER drive controller
- DC link voltage U_{ZK} = DC 540 V
- Coating: RAL 9005 Jet black, matte

In addition, the technical data applies to an uninsulated design with the following thermal mounting conditions:

Type	Dimensions of steel mounting flange (thickness x width x height)	Convection surface area Steel mounting flange
EZS5	23 x 210 x 275 mm	0.16 m^2
EZS7	28 x 300 x 400 mm	0.3 m^2

Formula symbols

An explanation of the formula symbols can be found in Chapter [▶ 23.1].

Observe the additional information on the following formula symbols:

- I_0 = RMS value of the line-to-line current when stall torque M_0 is generated (tolerance ±5%).
- I_{max} = RMS value of the short-term maximum permitted line-to-line current when maximum torque M_{max} is generated (tolerance ±5%). Exceeding I_{max} may lead to irreversible damage (demagnetization) of the rotor.
- I_N = RMS value of the line-to-line current when nominal torque M_N is generated at the nominal point (tolerance ±5%).
- M_0 = Torque that a motor is continuously able to deliver at a speed of 10 rpm (tolerance ±5%). At a speed of 0 rpm, a minor continuous torque has to be taken into account. Contact your STOBER customer advisor for such an application.

20.2.1 EZS motors with convection cooling

Type	K_{EM} [V/1000 rpm]	n_N [rpm]	M_N [Nm]	I_N [A]	$K_{M,N}$ [Nm/A]	P_N [kW]	M_0 [Nm]	I_0 [A]	K_{M0} [Nm/A]	M_R [Nm]	M_{max} [Nm]	I_{max} [A]	R_{U-V} [Ω]	L_{U-V} [mH]	T_{el} [ms]	J [kcgm²]	m [kg]
EZS501U	97	3000	3.85	3.65	1.05	1.2	4.30	3.95	1.19	0.40	16.0	22.0	3.80	23.50	6.18	6.50	7.10
EZS502U	121	3000	6.90	5.30	1.30	2.2	7.55	5.70	1.40	0.40	31.0	33.0	2.32	16.80	7.24	8.80	8.50
EZS503U	119	3000	9.10	6.70	1.36	2.9	10.7	7.60	1.46	0.40	43.0	41.0	1.25	10.00	8.00	11.1	10.0
EZS701U	95	3000	6.65	6.80	0.98	2.1	7.65	7.70	1.07	0.59	20.0	25.0	1.30	12.83	9.87	20.3	12.6
EZS702U	133	3000	11.0	7.75	1.42	3.5	13.5	9.25	1.53	0.59	41.0	36.0	1.00	11.73	11.73	25.6	14.9
EZS703U	122	3000	15.3	10.8	1.42	4.8	19.7	13.5	1.50	0.59	65.0	62.0	0.52	6.80	13.08	30.8	17.2

20.2.2 EZS motors with forced ventilation

Type	K_{EM} [V/1000 rpm]	n_N [rpm]	M_N [Nm]	I_N [A]	$K_{M,N}$ [Nm/A]	P_N [kW]	M_0 [Nm]	I_0 [A]	K_{M0} [Nm/A]	M_R [Nm]	M_{max} [Nm]	I_{max} [A]	R_{U-V} [Ω]	L_{U-V} [mH]	T_{el} [ms]	J [kcgm²]	m [kg]
EZS501B	97	3000	5.10	4.70	1.09	1.6	5.45	5.00	1.17	0.40	16.0	22.0	3.80	23.50	6.18	6.50	9.00
EZS502B	121	3000	10.0	7.80	1.28	3.1	10.9	8.16	1.38	0.40	31.0	33.0	2.32	16.80	7.24	8.80	10.4
EZS503B	119	3000	14.1	10.9	1.29	4.4	15.6	11.8	1.35	0.40	43.0	41.0	1.25	10.00	8.00	11.1	11.9
EZS701B	95	3000	9.35	9.50	0.98	2.9	10.2	10.0	1.07	0.59	20.0	25.0	1.30	12.83	9.87	20.3	15.5
EZS702B	133	3000	16.3	11.8	1.38	5.1	19.0	12.9	1.51	0.59	41.0	36.0	1.00	11.73	11.73	25.6	17.8
EZS703B	122	3000	23.7	18.2	1.30	7.4	27.7	20.0	1.41	0.59	65.0	62.0	0.52	6.80	13.08	30.8	20.1

20.3 Torque/speed curves

Torque/speed curves depend on the nominal speed and/or winding design of the motor and the DC link voltage of the drive controller that is used. The following torque/speed curves apply to the DC link voltage DC 540 V.

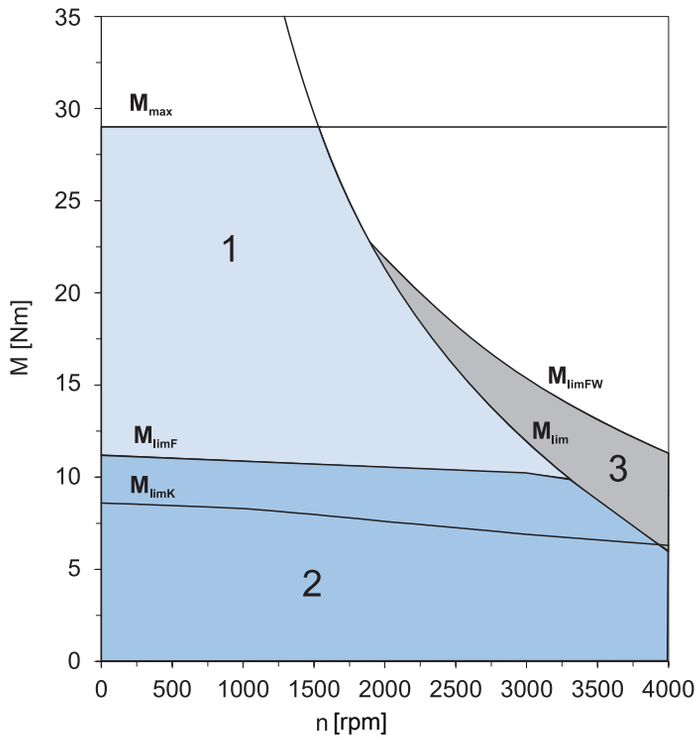

Fig. 1: Explanation of a torque/speed curve

1	Torque range for brief operation (ED_{10} < 100%) with $\Delta\vartheta$ = 100 K	2	Torque range for continuous operation with constant load (S1 mode, ED_{10} = 100%) with $\Delta\vartheta$ = 100 K
3	Field weakening range (can be used only with operation on STOBER drive controllers)		

EZS501 (n_N=3000 rpm)

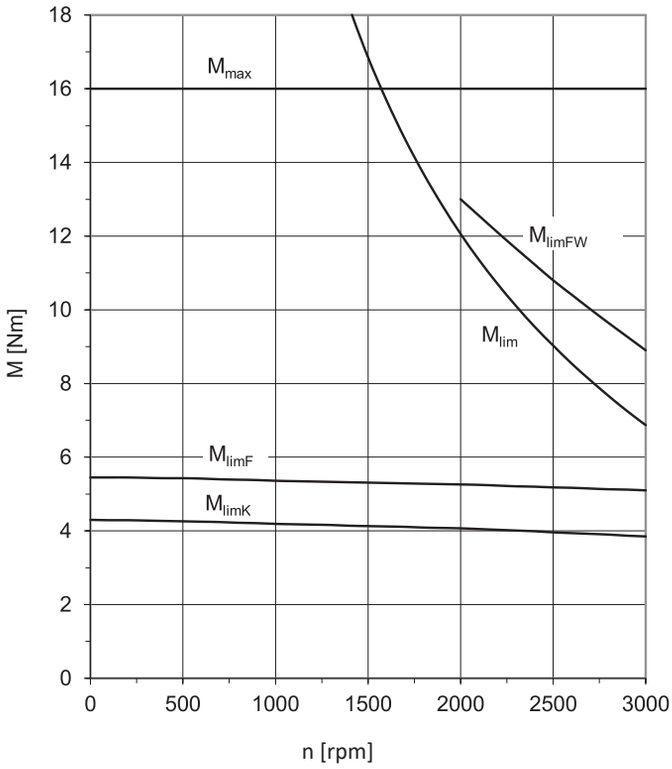

EZS502 (n_N=3000 rpm)

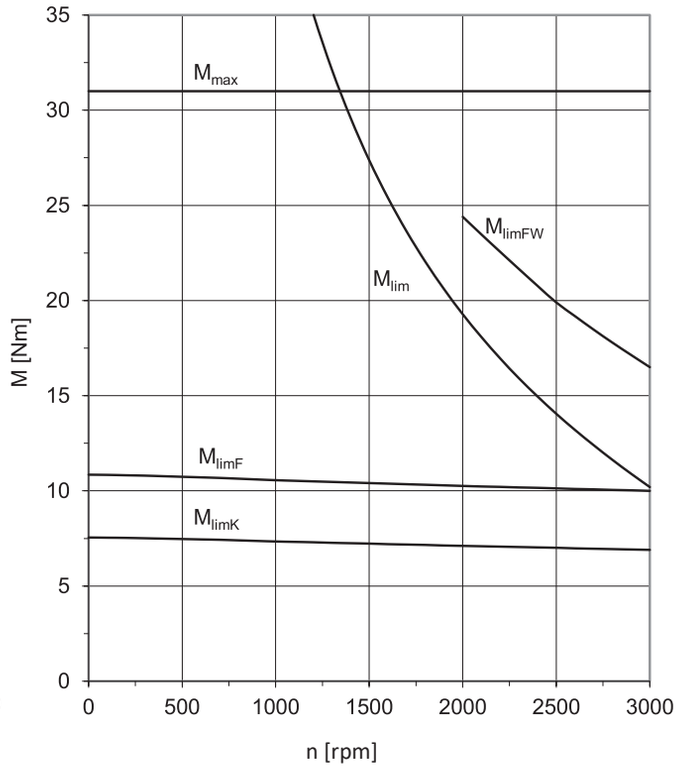

EZS503 (n_N=3000 rpm)

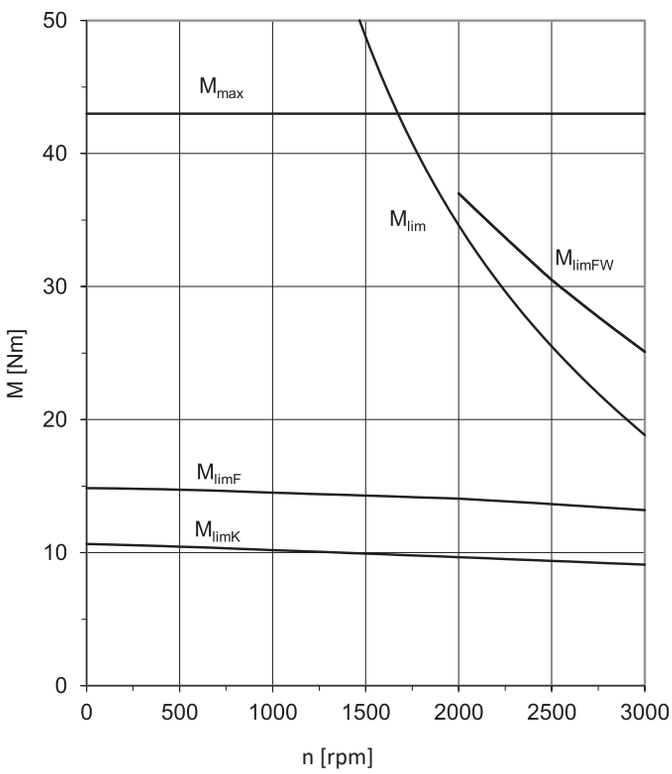

EZS701 (n_N=3000 rpm)

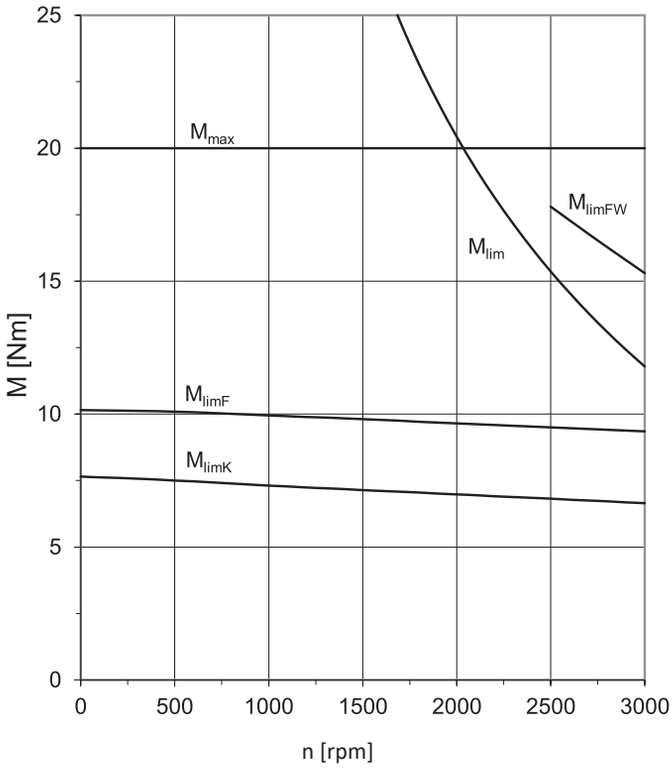

EZS702 (n_N=3000 rpm)

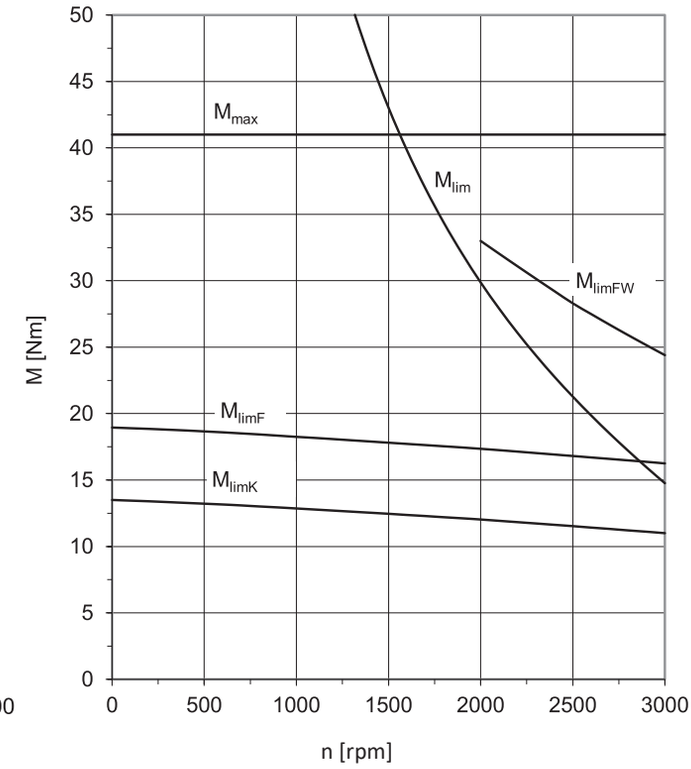

EZS703 (n_N=3000 rpm)

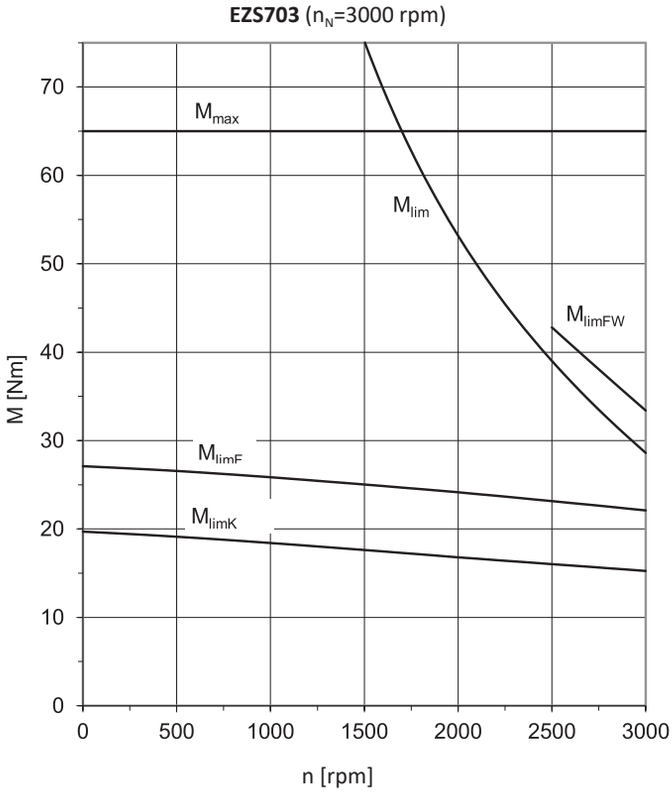

20.4 Dimensional drawings

In this chapter, you can find the dimensions of the motors.

Dimensions can exceed the specifications of ISO 2768-mK due to casting tolerances or accumulation of individual tolerances.

We reserve the right to make dimensional changes due to ongoing technical development.

You can download 3D models of our standard drives at http://configurator.stoeber.de.

In this chapter, the dimensions p1 and w1 for standard motor designs are presented. In designs for connection to drive controllers of third-party manufacturers, dimensions p1 and w1 may differ. You can find more details at http://configurator.stoeber.de.

20.4.1 EZS motors with convection cooling (One Cable Solution)

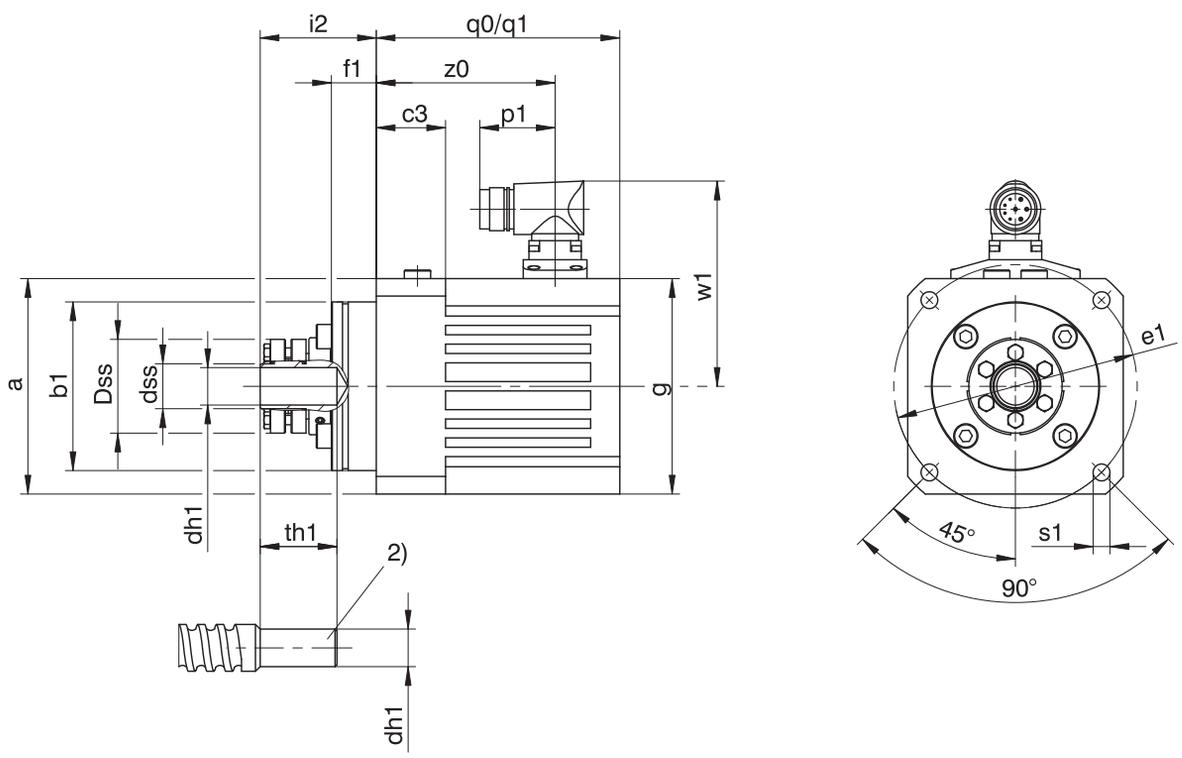

q0 Applies to motors without holding brake

q1 Applies to motors with holding brake

2) Threaded spindle provided by customer

Type	□a	Øb1	c3	Ødh1	Ødss	ØDss	Øe1	f1	□g	i2	p1	q0	q1	Øs1	th1	w1	z0
EZS501U	115	$90_{-0,01}$	37	20_{h6}^{H6}	24_{h7}	50	130	24	115	62.0	40	130	184.5	9	40.5	110	95.5
EZS502U	115	$90_{-0,01}$	37	20_{h6}^{H6}	24_{h7}	50	130	24	115	62.0	40	155	209.5	9	40.5	110	120.5
EZS503U	115	$90_{-0,01}$	37	20_{h6}^{H6}	24_{h7}	50	130	24	115	62.0	40	180	234.5	9	40.5	110	145.5
EZS701U	145	$115_{-0,01}$	46	25_{h6}^{H6}	30_{h7}	60	165	24	145	66.5	40	148	206.7	11	44.5	125	110.2
EZS702U	145	$115_{-0,01}$	46	25_{h6}^{H6}	30_{h7}	60	165	24	145	66.5	40	173	231.7	11	44.5	125	135.2
EZS703U	145	$115_{-0,01}$	46	25_{h6}^{H6}	30_{h7}	60	165	24	145	66.5	40	198	256.7	11	44.5	125	160.2

20.4.2 EZS motors with convection cooling

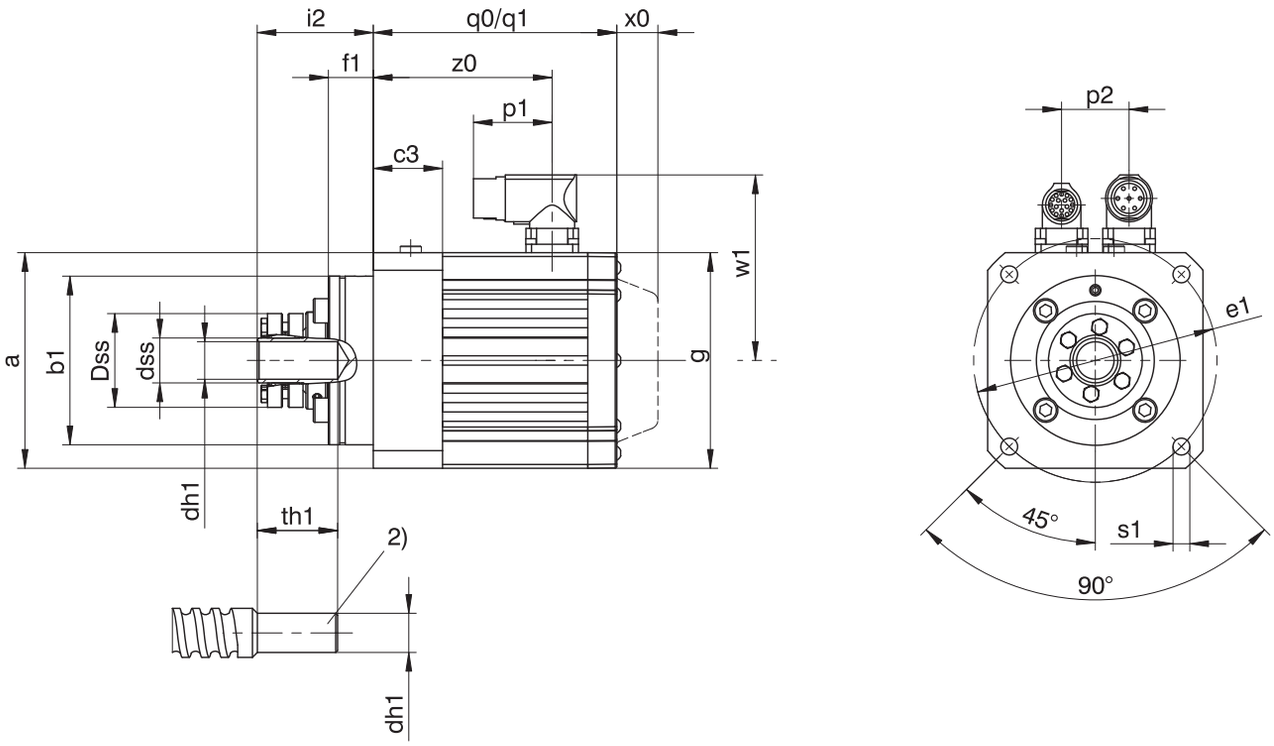

q0	Applies to motors without holding brake	q1	Applies to motors with holding brake
x	Applies to encoders based on an optical measuring method	2)	Threaded spindle provided by customer

Type	□a	Øb1	c3	Ødh1	Ødss	ØDss	Øe1	f1	□g	i2	p1	p2	q0	q1	Øs1	th1	w1	x0	z0
EZS501U	115	$90_{-0,01}$	37	20_{h6}^{H6}	24_{h7}	50	130	24	115	62.0	40	36	130	184.5	9	40.5	100	22	95.5
EZS502U	115	$90_{-0,01}$	37	20_{h6}^{H6}	24_{h7}	50	130	24	115	62.0	40	36	155	209.5	9	40.5	100	22	120.5
EZS503U	115	$90_{-0,01}$	37	20_{h6}^{H6}	24_{h7}	50	130	24	115	62.0	40	36	180	234.5	9	40.5	100	22	145.5
EZS701U	145	$115_{-0,01}$	46	25_{h6}^{H6}	30_{h7}	60	165	24	145	66.5	40	42	148	206.7	11	44.5	115	22	110.2
EZS702U	145	$115_{-0,01}$	46	25_{h6}^{H6}	30_{h7}	60	165	24	145	66.5	40	42	173	231.7	11	44.5	115	22	135.2
EZS703U	145	$115_{-0,01}$	46	25_{h6}^{H6}	30_{h7}	60	165	24	145	66.5	40	42	198	256.7	11	44.5	115	22	160.2

20.4.3 EZS motors with forced ventilation (One Cable Solution)

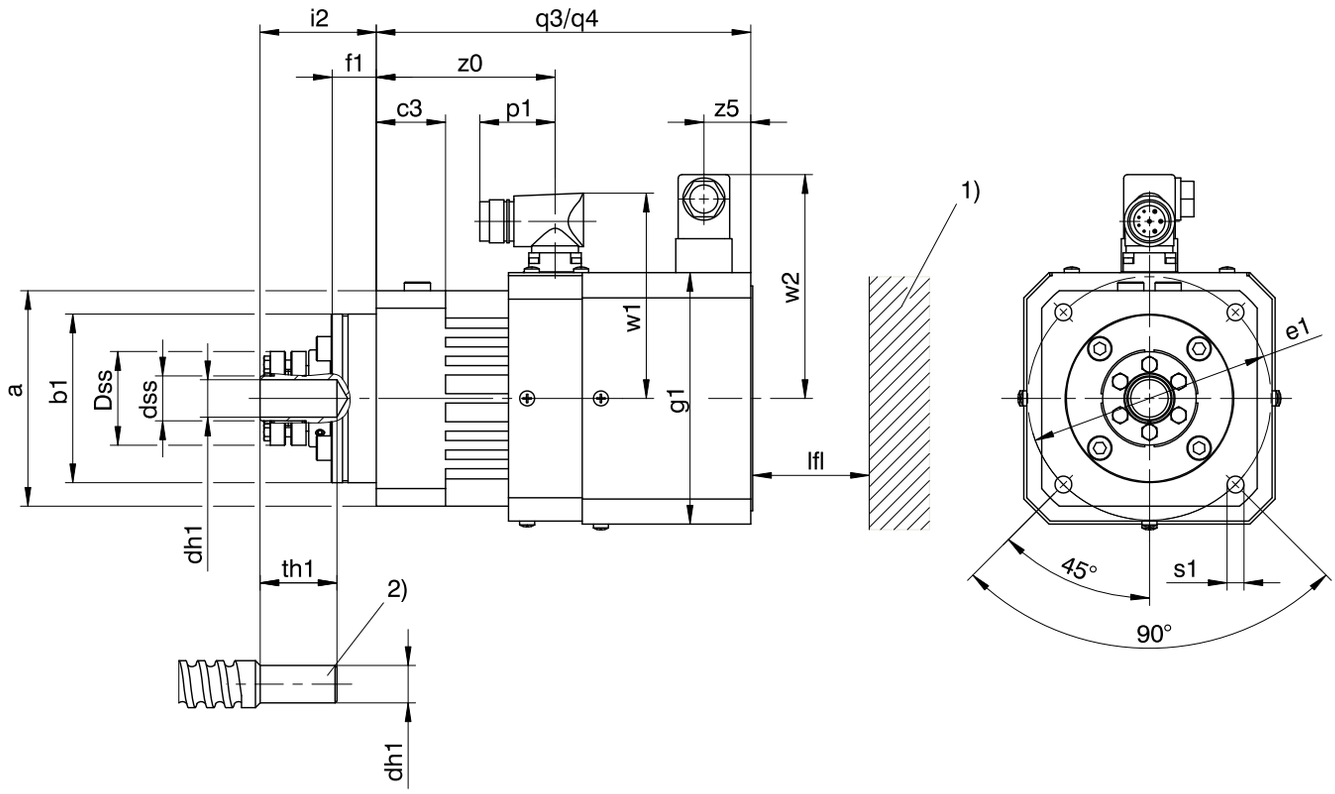

q3	Applies to motors without holding brake	q4	Applies to motors with holding brake
1)	Machine wall	2)	Threaded spindle provided by customer

Type	□a	Øb1	c3	Ødh1	Ødss	ØDss	Øe1	f1	□g1	i2	lfl_{min}	p1	q3	q4	Øs1	th1	w1	w2	z0	z5
EZS501B	115	$90_{-0,01}$	37	20_{h6}^{H6}	24_{h7}	50	130	24	134.5	62.0	20	40	200	265.0	9	40.5	110	120	95.5	25
EZS502B	115	$90_{-0,01}$	37	20_{h6}^{H6}	24_{h7}	50	130	24	134.5	62.0	20	40	225	280.0	9	40.5	110	120	120.5	25
EZS503B	115	$90_{-0,01}$	37	20_{h6}^{H6}	24_{h7}	50	130	24	134.5	62.0	20	40	250	305.0	9	40.5	110	120	145.5	25
EZS701B	145	$115_{-0,01}$	46	25_{h6}^{H6}	30_{h7}	60	165	24	164.5	66.5	30	40	240	298.7	11	44.5	125	134	110.2	40
EZS702B	145	$115_{-0,01}$	46	25_{h6}^{H6}	30_{h7}	60	165	24	164.5	66.5	30	40	265	321.7	11	44.5	125	134	135.2	40
EZS703B	145	$115_{-0,01}$	46	25_{h6}^{H6}	30_{h7}	60	165	24	164.5	66.5	30	40	290	348.7	11	44.5	125	134	160.2	40

20.4.4 EZS motors with forced ventilation

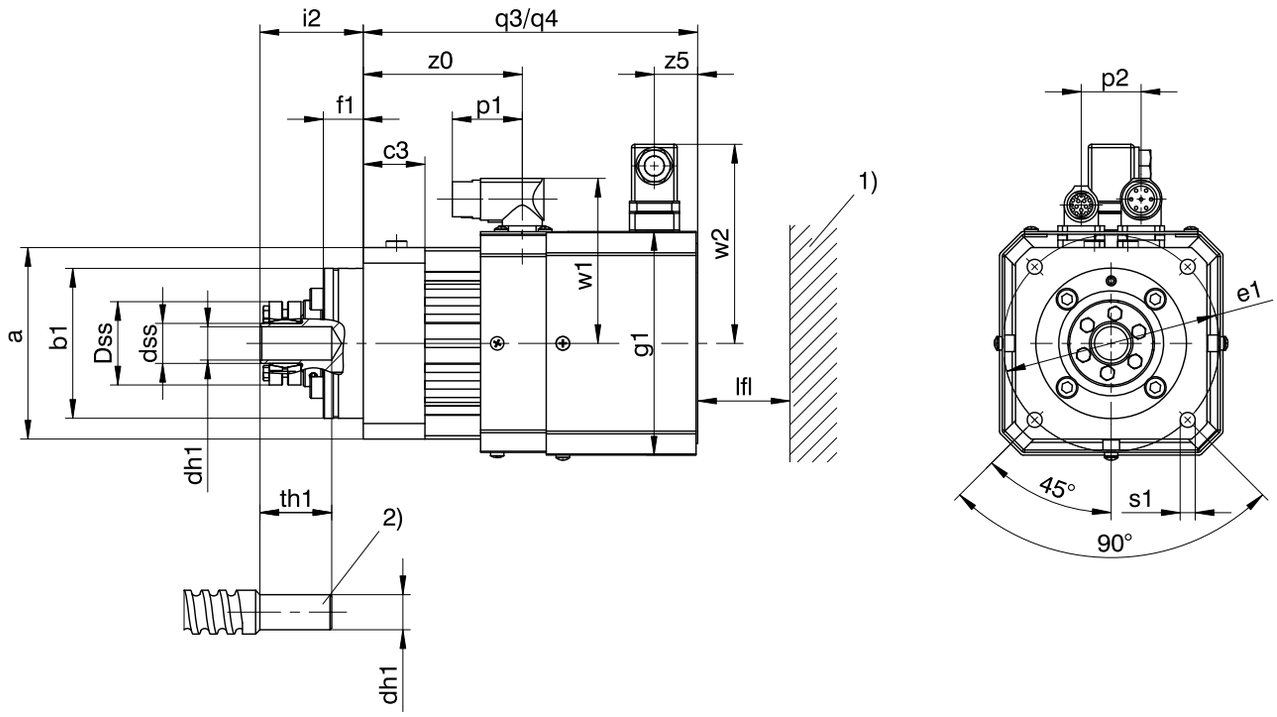

q3	Applies to motors without holding brake	q4	Applies to motors with holding brake
1)	Machine wall	2)	Threaded spindle provided by customer

Type	□a	Øb1	c3	Ødh1	Ødss	ØDss	Øe1	f1	□g1	i2	lfl_{min}	p1	p2	q3	q4	Øs1	th1	w1	w2	z0	z5
EZS501B	115	$90_{-0,01}$	37	20_{h6}^{H6}	24_{h7}	50	130	24	134.5	62.0	20	40	36	200	265.0	9	40.5	100	120	95.5	25
EZS502B	115	$90_{-0,01}$	37	20_{h6}^{H6}	24_{h7}	50	130	24	134.5	62.0	20	40	36	225	280.0	9	40.5	100	120	120.5	25
EZS503B	115	$90_{-0,01}$	37	20_{h6}^{H6}	24_{h7}	50	130	24	134.5	62.0	20	40	36	250	305.0	9	40.5	100	120	145.5	25
EZS701B	145	$115_{-0,01}$	46	25_{h6}^{H6}	30_{h7}	60	165	24	164.5	66.5	30	40	42	240	298.7	11	44.5	115	134	110.2	40
EZS702B	145	$115_{-0,01}$	46	25_{h6}^{H6}	30_{h7}	60	165	24	164.5	66.5	30	40	42	265	321.7	11	44.5	115	134	135.2	40
EZS703B	145	$115_{-0,01}$	46	25_{h6}^{H6}	30_{h7}	60	165	24	164.5	66.5	30	40	42	290	348.7	11	44.5	115	134	160.2	40

20.5 Type designation

Example code

EZS	5	0	1	U	D	BB	Q7	O	097

Explanation

Code	Designation	Design
EZS	Type	Synchronous servo motor for screw drives
5	Motor size	5 (example)
0	Generation	0
1	Length	1 (example)
U B	Cooling	Convection cooling Forced ventilation
D	Design	Dynamic
BB	Drive controller	SI6 (example)
Q7	Encoder	EnDat 3 EQI 1131 (example)
O P	Brake	Without holding brake Permanent magnet holding brake
097	Voltage constant K_{EM}	97 V/1000 rpm (example)

Notes

- In Chapter [▸ 20.6.5], you can find information about available encoders.
- In Chapter [▸ 20.6.5.6], you can find information about connecting synchronous servo motors to other drive controllers from STOBER.
- In Chapter [▸ 21], you can find information about options for connecting STOBER synchronous servo motors to drive controllers from other manufacturers.

20.6 Product description

20.6.1 General features

Feature	EZS5	EZS7
Threaded spindle ∅ [mm]	25/32	32/40
Nominal speed n_N [rpm]	3000	3000
Bearing type[1]	INA ZKLF 3590-2Z[2]	INA ZKLF 50115-2Z[3]
Maximum bearing speed n_{la} [rpm]	3800	3000
Axial bearing load rating, dynamic C_{dyn} [N]	41000	46500
Axial rigidity C_{ax} [N/µm]	500	770
Shrink ring type	RINGFEDER RfN 4061 24 × 50	RINGFEDER RfN 4061 30× 60
Torque [Nm] that can be transmitted by the shrink ring	324	514
Axial force $F_{ax,ss}$ [N] that can be transmitted by the shrink ring	32000	41000
Surface pressure on the hub of the shrink ring [N/mm²]	272	228
Pin diameter of the threaded spindle dh1 [mm]	20	25
Protection class	IP40	IP40
Thermal class	155 (F) in accordance with EN 60034-1 (155 °C, heating Δϑ = 100 K)	
Surface[4]	Matte black as per RAL 9005	
Noise level	Limit values in accordance with EN 60034-9	
Cooling	IC 410 convection cooling (IC 416 convection cooling with optional forced ventilation)	

[1] Axial angular contact ball bearing for screw drives, grease-lubricated, can be relubricated
[2] Or comparable products from other providers
[3] Or comparable products from other providers
[4] Repainting the motor will change the thermal properties and therefore the performance limits.

20.6.2 Electrical features

General electrical features of the motor are described in this chapter. Details can be found in the "Selection tables" chapter.

Feature	Description
DC link voltage	DC 540 V (max. 620 V) on STOBER drive controllers
Winding	Three-phase, single-tooth coil design
Circuit	Star, center not led through
Protection class	I (protective grounding) in accordance with EN 61140
Impulse voltage insulation class (IVIC)	C in accordance with DIN EN 60034-18-41 (inverter connection voltage 0 – 480 V ± 10%)
Number of pole pairs	7

20.6.3 Ambient conditions

Standard ambient conditions for transport, storage and operation of the motor are described in this chapter.

Feature	Description
Surrounding temperature for transport/storage	−30 °C to +85 °C
Surrounding temperature for operation	−15 °C to +40 °C
Relative humidity	5% to 95%, no condensation
Installation altitude	≤ 1000 m above sea level
Shock load	≤ 50 m/s^2 (5 g), 6 ms in accordance with EN 60068-2-27

Notes

- STOBER synchronous servo motors are not suitable for potentially explosive atmospheres.
- Secure the power cables close to the motor so that vibrations of the cable do not place impermissible loads on the motor plug connector.
- Note that the braking torques of the holding brake (optional) may be reduced by shock loading.
- At operating temperatures below 0 °C, note that the discs of the holding brake (optional) may ice up.

20.6.4 Lubrication of the screw drive

Lubricants that enter into the inside of the motor can impair the function of the holding brake and encoder. Therefore, take the protection class of the synchronous servo motor into account when configuring your screw drive, especially when installing the synchronous servo motor vertically with the A side on top.

For detailed information about lubricating the screw drive, contact your screw drive manufacturer.

20.6.5 Encoders

STOBER synchronous servo motors can be designed with different encoder models. The following chapters include information for choosing the optimal encoder for your application.

20.6.5.1 Encoder measuring method selection tool

The following table offers a selection tool for an encoder measuring method that is optimally suited for your application.

Feature	Absolute encoder		Resolver
Measuring method	Optical	Inductive	Electromagnetic
Temperature resistance	★★☆	★★★	★★★
Vibration strength and shock resistance	★★☆	★★★	★★★
System accuracy	★★★	★★☆	★☆☆
FMA version with fault exclusion for mechanical coupling (option with EnDat interface)	✓	✓	–
Elimination of referencing with multi-turn design (optional)	✓	✓	–

Feature	Absolute encoder		Resolver
Simple commissioning with electronic nameplate	✓	✓	–
Key: ★☆☆ = satisfactory, ★★☆ = good, ★★★ = very good			

20.6.5.2 Selection tool for EnDat interface

The following table offers a selection tool for the EnDat interface of absolute encoders.

Feature	EnDat 2.1	EnDat 2.2	EnDat 3
Short cycle times	★★☆	★★★	★★★
Transfer of additional information along with the position value	–	✓	✓
Expanded power supply range	★★☆	★★★	★★★
One Cable Solution (OCS)	–	–	✓
Key: ★★☆ = good, ★★★ = very good			

20.6.5.3 EnDat 3 encoders

EnDat 3 is a robust, purely digital protocol that functions with minimal connection lines. EnDat 3 facilitates the One Cable Solution, which allows the connection lines between the encoder and drive controller to be routed along in the motor's power cable.

The One Cable Solution offers the following advantages:

- Significantly reduced wiring effort by eliminating the encoder cable
- For cable lengths up to 50 m, a choke between the drive controller and motor is not necessary
- Advanced safety functions possible (up to SIL2 / category 3, PLd)
- Significantly reduced space requirements by eliminating the encoder plug connector
- Transmission of measured values from the temperature sensor using the EnDat 3 protocol

A motor with the EnDat 3 encoder can be operated only on a SI6 or SC6 drive controller from STOBER.

The EnDat 3 encoder has the following features:

Encoder model	Code	Measuring method	Recordable revolutions	Resolution	Position values per revolution
EnDat 3 EQI 1131	Q7	Inductive	4096	19 bit	524288

20.6.5.4 EnDat 2 encoders

In this chapter, you can find detailed technical data for encoder models that can be selected with EnDat interface.

Encoders with EnDat 2.2 interface

Encoder model	Code	Measuring method	Recordable revolutions	Resolution	Position values per revolution
EnDat 2.2 EQI 1131	Q6	Inductive	4096	19 bit	524288
EnDat 2.2 EBI 1135	B0	Inductive	65536	18 bit	262144
EnDat 2.2 EQN 1135 FMA	M3	Optical	4096	23 bit	8388608
EnDat 2.2 EQN 1135	Q5	Optical	4096	23 bit	8388608
EnDat 2.2 ECN 1123 FMA	M1	Optical	–	23 bit	8388608
EnDat 2.2 ECN 1123	C7	Optical	–	23 bit	8388608
EnDat 2.2 ECI 1118-G2	C5	Inductive	–	18 bit	262144

Encoders with EnDat 2.1 interface

Encoder model	Code	Measuring method	Recordable revolutions	Resolution	Position values per revolution	Periods per revolution
EnDat 2.1 EQN 1125 FMA	M2	Optical	4096	13 bit	8192	Sin/Cos 512
EnDat 2.1 EQN 1125	Q4	Optical	4096	13 bit	8192	Sin/Cos 512
EnDat 2.1 ECN 1113 FMA	M0	Optical	–	13 bit	8192	Sin/Cos 512
EnDat 2.1 ECN 1113	C6	Optical	–	13 bit	8192	Sin/Cos 512

Notes

- The encoder code is a part of the type designation of the motor.
- FMA = Version with fault exclusion for mechanical coupling.
- The EnDat 2.2 EBI 1135 encoder requires an external buffer battery so that absolute position information is retained after the power supply is turned off (AES option for STOBER drive controllers).
- Multiple revolutions of the motor shaft can be recorded only using multi-turn encoders.

20.6.5.5 Resolver

In this chapter, you can find detailed technical data for the resolver that can be installed as an encoder in a STOBER synchronous servo motor.

Feature	Description
Number of poles	2
Input voltage U_{1eff}	7 V ± 5%
Input frequency f_1	10 kHz
Output voltage $U_{2,S1–S3}$	$K_{tr} \cdot U_{R1–R2} \cdot \cos \theta$
Output voltage $U_{2,S2–S4}$	$K_{tr} \cdot U_{R1–R2} \cdot \sin \theta$
Transformation ratio K_{tr}	0.5 ± 5%
Electrical fault	±10 arcmin

20.6.5.6 Possible combinations with drive controllers

The following table shows the options for combining STOBER drive controllers with selectable encoder models.

Drive controller		SDS 5000		SD6		SI6			SC6		
Drive controller code		AA	AC	AD	AE	AP	AQ	**BB**	AU	AV	**BA**
Connection plan ID		442305	442307	442450	442451	442771	442772	**443175**	443052	443053	**443174**
Encoder	Encoder code										
EnDat 3 EQI 1131	Q7	–	–	–	–	–	–	✓	–	–	✓
EnDat 2.2 EQI 1131	Q6	✓	–	✓	–	✓	–	–	✓	–	–
EnDat 2.2 EQN 1135 FMA	M3	✓	–	✓	–	–	–	–	–	–	–
EnDat 2.2 EQN 1135	Q5	✓	–	✓	–	✓	–	–	✓	–	–
EnDat 2.2 ECN 1123 FMA	M1	✓	–	✓	–	–	–	–	–	–	–
EnDat 2.2 ECN 1123	C7	✓	–	✓	–	✓	–	–	✓	–	–
EnDat 2.2 ECI 1118-G2	C5	✓	–	✓	–	✓	–	–	✓	–	–
EnDat 2.1 EQN 1125 FMA	M2	✓	✓	✓	✓	–	–	–	–	–	–
EnDat 2.1 EQN 1125	Q4	✓	✓	✓	✓	–	–	–	–	–	–
EnDat 2.1 ECN 1113 FMA	M0	✓	✓	✓	✓	–	–	–	–	–	–
EnDat 2.1 ECN 1113	C6	✓	✓	✓	✓	–	–	–	–	–	–
Resolver	R0	✓	–	–	✓	–	✓	–	–	✓	–

Notes

- The drive controller and encoder codes are a part of the type designation of the motor (see the "Type designation" chapter).
- In Chapter [▸ 21], you can find information about options for connecting STOBER synchronous servo motors to drive controllers from other manufacturers.

20.6.6 Temperature sensor

In this chapter, you can find technical data for the temperature sensors that are installed in STOBER synchronous servo motors for implementing thermal winding protection. To prevent damage to the motor, always monitor the temperature sensor with appropriate devices that will turn off the motor if the maximum permitted winding temperature is exceeded.

Some encoders feature integrated temperature monitoring, the warning and switch-off thresholds of which may overlap with the corresponding values set for the temperature sensor in the drive controller. In some cases, this may result in an instance where an encoder with internal temperature monitoring forces the motor to shut down, even before the motor has reached its nominal data.

You can find information about the electrical connection of the temperature sensor in the "Connection method" chapter.

20.6.6.1 PTC thermistor

The PTC thermistor is installed as a standard temperature sensor in STOBER synchronous servo motors.

The PTC thermistor is a triple thermistor in accordance with DIN 44082 that can be used for monitoring the temperature of each winding phase. The resistance values in the following table and curve refer to a single thermistor in accordance with DIN 44081. These values must be multiplied by 3 for a triple thermistor in accordance with DIN 44082.

Feature	Description
Nominal response temperature ϑ_{NAT}	145 °C ± 5 K
Resistance R −20 °C up to ϑ_{NAT} − 20 K	≤ 250 Ω
Resistance R with ϑ_{NAT} − 5 K	≤ 550 Ω
Resistance R with ϑ_{NAT} + 5 K	≥ 1330 Ω
Resistance R with ϑ_{NAT} + 15 K	≥ 4000 Ω
Operating voltage	≤ DC 7.5 V
Thermal response time	< 5 s
Thermal class	155 (F) in accordance with EN 60034-1 (155 °C, heating Δϑ = 100 K)

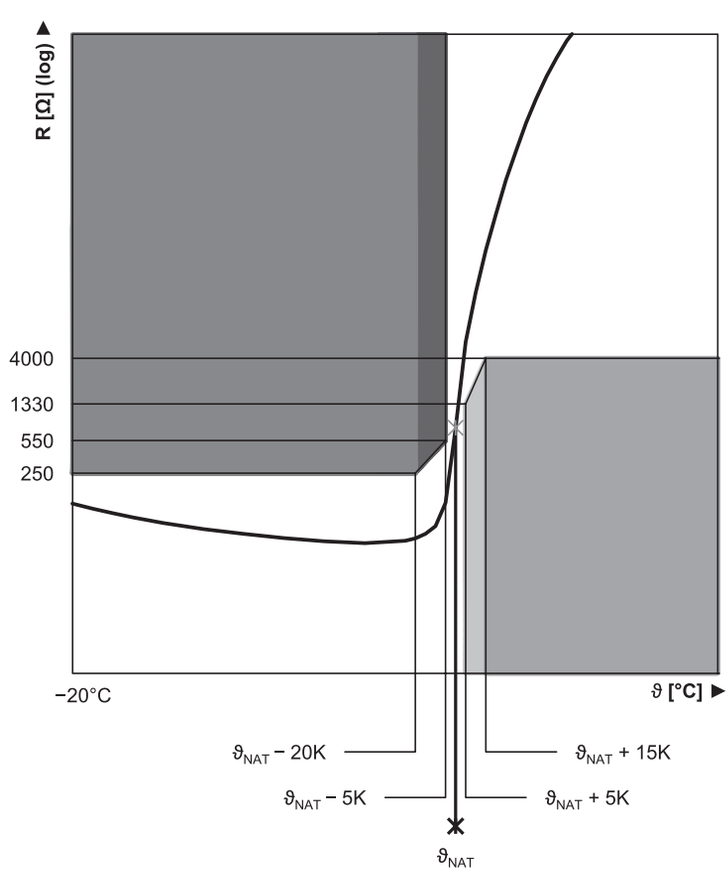

Fig. 2: PTC thermistor curve (single thermistor)

20.6.6.2 Pt1000 temperature sensor

STOBER synchronous servo motors are available in versions with a Pt1000 temperature sensor. The Pt1000 is a temperature-dependent resistor that has a resistance curve with a linear relationship with temperature. As a result, the Pt1000 allows for measurements of the winding temperature. These measurements are limited to one phase of the motor winding, however. In order to adequately protect the motor from exceeding the maximum permitted winding temperature, use a i^2t model in the drive controller to monitor the winding temperature.

Pt1000 temperature sensors can also be used with the One Cable Solution.

Avoid exceeding the specified measurement current so that the measured values are not falsified due to self-heating of the temperature sensor.

Feature	Description
Measurement current (constant)	2 mA
Resistance R for ϑ = 0 °C	1000 Ω
Resistance R for ϑ = 80 °C	1300 Ω
Resistance R for ϑ = 150 °C	1570 Ω

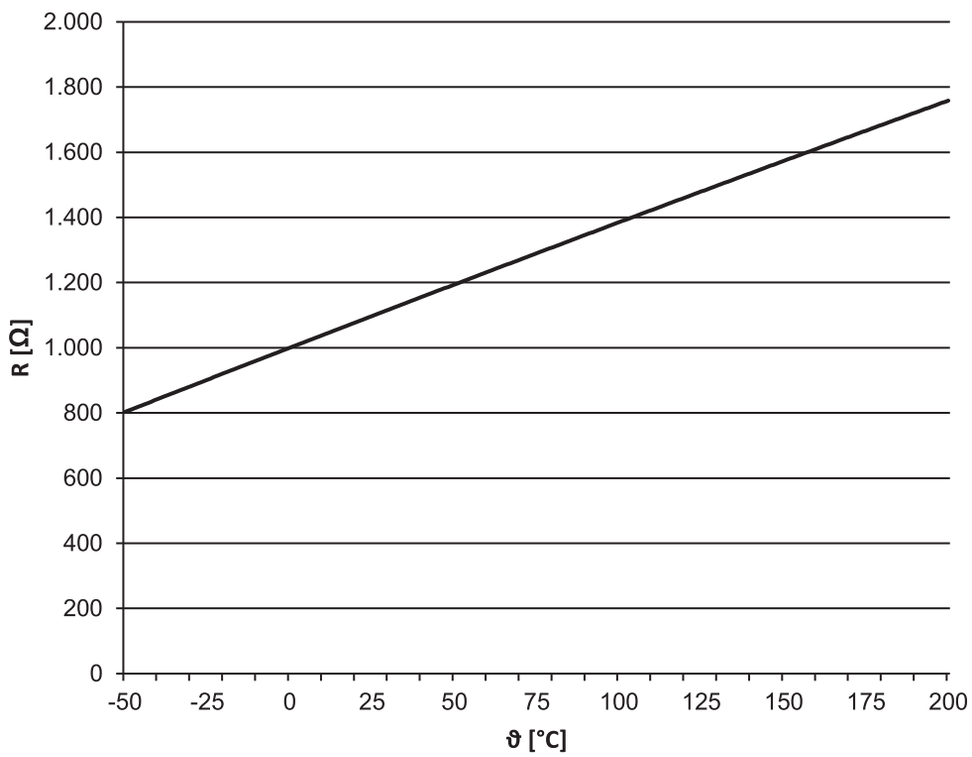

Fig. 3: Pt1000 temperature sensor characteristic curve

20.6.7 Cooling

A synchronous servo motor in the standard version is cooled by convection cooling (IC 410 in accordance with EN 60034-6). Optionally, forced ventilation can be used to cool the motor.

20.6.7.1 Forced ventilation

STOBER synchronous servo motors offer the option of being cooled with forced ventilation in order to increase performance data while maintaining the same size. Retrofitting with a forced ventilation unit is also possible in order to optimize the drive at a later date. When retrofitting, check whether the conductor cross-section of the power cable of the motor must be increased. Also take into account the dimensions of the forced ventilation unit.

The performance data for motors with forced ventilation can be found in the chapter Selection tables and the dimensions in the chapter Dimensional drawings.

Technical data

Motor	Forced ventilation unit	$U_{N,F}$ [V]	$I_{N,F}$ [V]	$P_{N,F}$ [W]	$q_{v,F}$ [m³/h]	$L_{p(A)}$ [dBA]	m_F [kg]	Protection class
EZS5_B	FL5	230 V ± 5%,	0.10	14	160	45	1.9	IP54
EZS7_B	FL7	50/60 Hz	0.10	14	160	45	2.9	IP54

Terminal assignment for forced ventilation unit plug connectors

Connection diagram	Pin	Connection
	1	L1 (phase)
	2	N (neutral conductor)
	3	
	⏚	Grounding conductor

20.6.8 Holding brake

STOBER synchronous servo motors can be equipped with a backlash-free holding brake using permanent magnets in order to secure the motor shaft when at a standstill. The holding brake engages automatically if the voltage drops.

The holding brake is designed for a high number of operations (B_{10} = 10 million operations, B_{10d} = 20 million operations).

Nominal voltage of permanent magnet holding brake: DC 24 V ± 5%, smoothed.

Observe the following during project configuration:

- The holding brake is designed to keep the motor shaft from moving. Activate braking processes during operation using the corresponding electrical functions of the drive controller. In exceptional circumstances, the holding brake can be used for braking from full speed (following a power failure or when setting up the machine). The maximum permitted work done by friction $W_{B,Rmax/h}$ may not be exceeded.
- Note that the braking torque M_{Bdyn} may initially be up to 50% less when braking from full speed. As a result, the braking effect has a delayed action and braking distances become longer.
- Regularly perform a brake test to ensure the functional safety of the brakes. Details can be found in the documentation of the motor and the drive controller.
- Connect a varistor of type S14 K35 (or comparable) in parallel to the brake coil to protect your machine from switching surges. (Not necessary for connecting the holding brake to STOBER drive controllers of the 5th and 6th generation with a BRS/BRM brake module).
- The holding brake of the motor does not offer adequate safety for persons in the hazardous area of gravity-loaded vertical axes. Therefore take additional measures to minimize risk, e.g. by providing a mechanical substructure for maintenance work.
- Take into consideration voltage losses in the connection cables that connect the voltage source to the holding brake connections.
- The holding torque of the brake can be reduced by shock loading. Information about shock loading can be found in the "Ambient conditions" chapter.
- At operating temperatures from −15 °C to 0 °C, a cold holding brake in the released state may cause operating noises. As the temperature of the holding brake increases, these noises decrease such that operating noises are not heard when using holding brake at operating temperature in the released state.

Calculation of work done by friction per braking process

$$W_{B,R/B} = \frac{J_{tot} \cdot n^2}{182.4} \cdot \frac{M_{Bdyn}}{M_{Bdyn} \pm M_L}, \; M_{Bdyn} > M_L$$

The sign of M_L is positive if the movement runs vertically upwards or horizontally and it is negative if the movement runs vertically down.

Calculation of the stop time

$$t_{dec} = 2.66 \cdot t_{1B} + \frac{n \cdot J_{tot}}{9.55 \cdot M_{Bdyn}}$$

Switching behavior

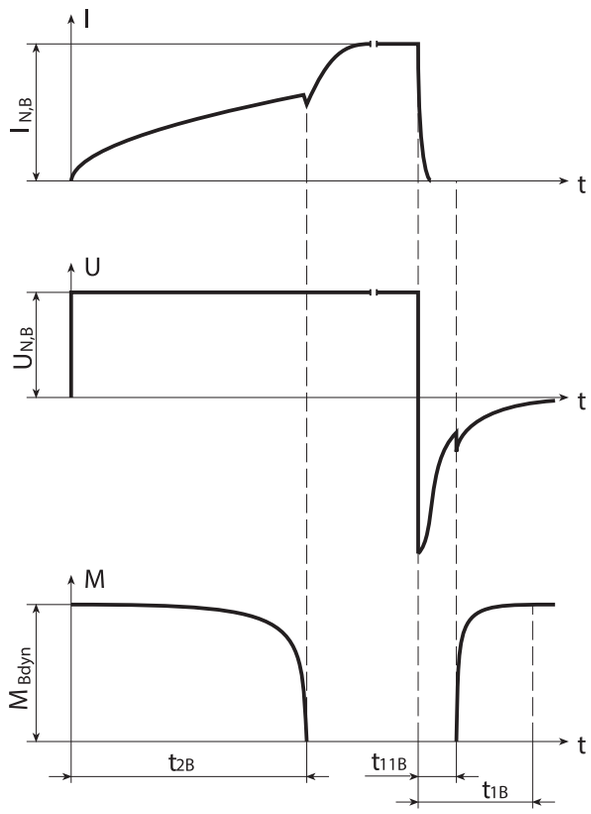

Fig. 4: Holding brake – Switching behavior

Technical data

Type	M_{Bstat} [Nm]	M_{Bdyn} [Nm]	$I_{N,B}$ [A]	$W_{B,Rmax/h}$ [kJ/h]	N_{Bstop}	J_{Bstop} [kgcm²]	$W_{B,Rlim}$ [kJ]	t_{2B} [ms]	t_{11B} [ms]	t_{1B} [ms]	$x_{B,N}$ [mm]	ΔJ_B [kgcm²]	Δm_B [kg]
EZS501	8.0	7.0	0.75	8.5	4300	14.1	300	40	2.0	20	0.3	0.550	1.19
EZS502	8.0	7.0	0.75	8.5	3200	18.7	300	40	2.0	20	0.3	0.550	1.19
EZS503	15	12	1.0	11.0	4300	25.6	550	60	5.0	30	0.3	1.700	1.62
EZS701	15	12	1.0	11.0	2500	44.0	550	60	5.0	30	0.3	1.700	1.94
EZS702	15	12	1.0	11.0	2000	54.6	550	60	5.0	30	0.3	1.700	1.94
EZS703	32	28	1.1	25.0	3800	72.8	1400	100	5.0	25	0.4	5.600	2.81

20.6.9 Connection method

The following chapters describe the connection technology of STOBER synchronous servo motors in the standard version on STOBER drive controllers. You can find further information relating to the drive controller type that was specified in your order in the connection plan that is delivered with every synchronous servo motor.

In Chapter [▶ 21], you can find information about options for connecting STOBER synchronous servo motors to drive controllers from other manufacturers.

20.6.9.1 Connection of the motor housing to the grounding conductor system

Connect the motor housing to the grounding conductor system of the machine in order to prevent personal injury and faulty triggering of residual current protective devices.

All attachment parts required for the connection of the grounding conductor to the motor housing are delivered with the motor. The grounding screw of the motor is identified with the symbol ⏚ in accordance with IEC 60417-DB. The cross-section of the grounding conductor has to be at least as large as the cross-section of the lines in the power connection.

20.6.9.2 Plug connectors (One Cable Solution)

In the One Cable Solution design, the power and encoder lines are connected using a shared plug connector.

For motors with forced ventilation, avoid collisions between the motor connection cables and the plug connector of the forced ventilation unit. In the event of a collision, turn the motor plug connectors accordingly. Details regarding the position of the plug connector for the forced ventilation unit can be found in the "Dimensional drawings" chapter.

The figures represent the position of the plug connectors upon delivery.

Turning ranges of plug connectors

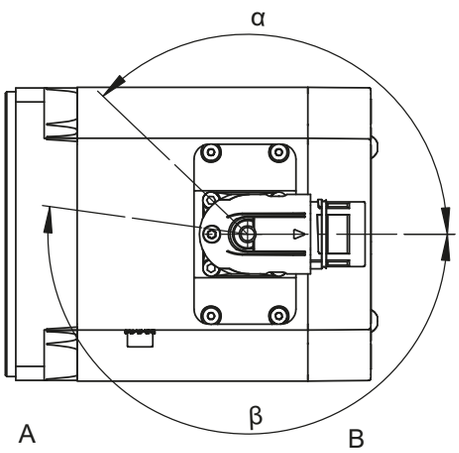

A	Attachment or output side of the motor	B	Rear side of the motor

Motor type	Size	Connection	Turning range	
			α	β
EZS	con.23	Quick lock	130°	190°

Notes

- The number after "con." indicates the approximate external thread diameter of the plug connector in mm (for example, con.23 designates a plug connector with an external thread diameter of about 23 mm).

20.6.9.3 Terminal assignment for plug connectors (One Cable Solution)

In the One Cable Solution design, the power and encoder lines are connected using a shared plug connector.

The temperature sensor of the motor is connected to the encoder internally. The measured values from the temperature sensor are transmitted via the EnDat 3 protocol of the encoder.

The colors of the connecting wires inside the motor are specified in accordance with IEC 60757.

Plug connector size con.23

Connection diagram	Pin	Connection	Color
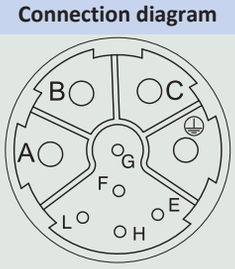	A	U phase	BK
	B	V phase	BU
	C	W phase	RD
	E	P_SD –	YE
	F		
	G	Brake +	
	H	P_SD +	VT
	L	Brake –	
	⏚	Grounding conductor	GNYE

20.6.9.4 Plug connectors

STOBER synchronous servo motors are equipped with rotatable quick-lock plug connectors in the standard version. Details can be found in this chapter.

For motors with forced ventilation, avoid collisions between the motor connection cables and the plug connector of the forced ventilation unit. In the event of a collision, turn the motor plug connectors accordingly. Details regarding the position of the plug connector for the forced ventilation unit can be found in the "Dimensional drawings" chapter.

The figures represent the position of the plug connectors upon delivery.

Turning ranges of plug connectors

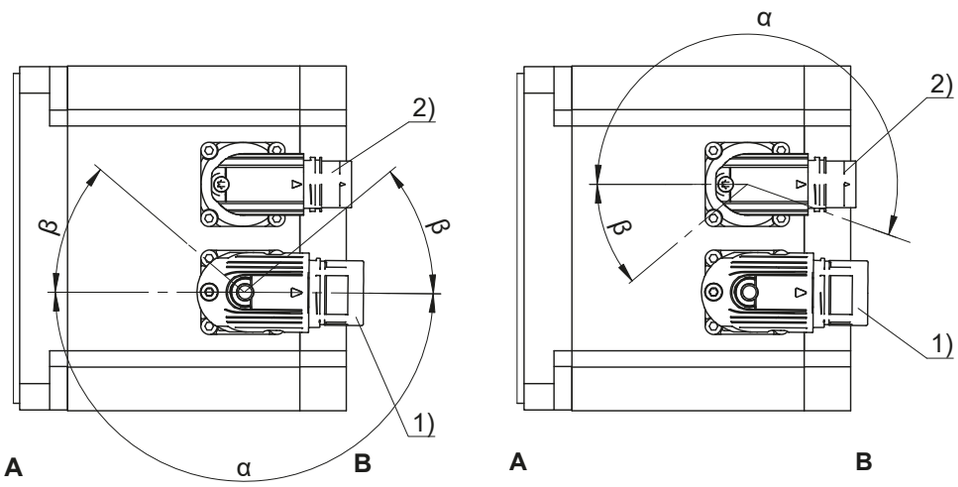

1	Power plug connector	2	Encoder plug connector
A	Attachment or output side of the motor	B	Rear side of the motor

Power plug connector features

Motor type	Size	Connection	Turning range	
			α	β
EZS	con.23	Quick lock	180°	40°

Encoder plug connector features

Motor type	Size	Connection	Turning range	
			α	β
EZS	con.17	Quick lock	195°	35°

Notes

- The number after "con." indicates the approximate external thread diameter of the plug connector in mm (for example, con.23 designates a plug connector with an external thread diameter of about 23 mm).
- In turning range β, the power or encoder plug connectors can be turned only if doing so does not cause them to collide.

20.6.9.5 Connection assignment of the power plug connector

The colors of the connecting wires inside the motor are specified in accordance with IEC 60757.

Plug connector size con.23

Connection diagram	Pin	Connection	Color
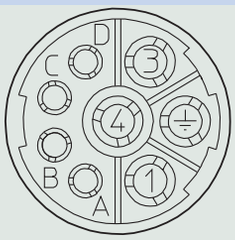	1	U phase	BK
	3	V phase	BU
	4	W phase	RD
	A	Brake +	RD
	B	Brake –	BK
	C	Temperature sensor +	
	D	Temperature sensor –	
	⏚	Grounding conductor	GNYE

20.6.9.6 Connection assignment of the encoder plug connector

The size and connection assignment of the encoder plug connectors depend on the model of encoder installed and the size of the motor. The colors of the connecting wires inside the motor are specified in accordance with IEC 60757.

EnDat 2.1/2.2 digital encoders, plug connector size con.17

Connection diagram	Pin	Connection	Color
	1	Clock +	VT
	2	Up sense	BNGN
	3		
	4		
	5	Data –	PK
	6	Data +	GY
	7		
	8	Clock –	YE
	9		
	10	0 V GND	WHGN
	11		
	12	Up +	BNGN

EnDat 2.2 digital encoder with battery buffering, plug connector size con.17

Connection diagram	Pin	Connection	Color
	1	Clock +	VT
	2	UBatt +	BU
	3	UBatt –	WH
	4		
	5	Data –	PK
	6	Data +	GY
	7		
	8	Clock –	YE
	9		
	10	0 V GND	WHGN
	11		
	12	Up +	BNGN
	UBatt+ = DC 3.6 V for encoder model EBI in combination with the AES option of STOBER drive controllers		

EnDat 2.1 encoder with sin/cos incremental signals, plug connector size con.17

Connection diagram	Pin	Connection	Color
	1	Up sense	BU
	2		
	3		
	4	0 V sense	WH
	5		
	6		
	7	Up +	BNGN
	8	Clock +	VT
	9	Clock –	YE
	10	0 V GND	WHGN
	11		
	12	B + (Sin +)	BUBK
	13	B – (Sin –)	RDBK
	14	Data +	GY
	15	A + (Cos +)	GNBK
	16	A – (Cos –)	YEBK
	17	Data –	PK

Resolver, plug connector size con.17

Connection diagram	Pin	Connection	Color
	1	S3 Cos +	BK
	2	S1 Cos –	RD
	3	S4 Sin +	BU
	4	S2 Sin –	YE
	5		
	6		
	7	R2 Ref +	YEWH/BKWH[5]
	8	R1 Ref –	RDWH
	9		
	10		
	11		
	12		

20.7 Project configuration

Project your drives using our SERVOsoft designing software. Download SERVOsoft for free at https://www.stoeber.de/en/ServoSoft.

Observe the limit conditions in this chapter to ensure a safe design for your drives.

An explanation of the formula symbols can be found in Chapter [▸ 23.1].

The formula symbols for values actually present in the application are marked with *.

20.7.1 Design of the screw drive

You can use the information below to select a suitable synchronous servo motor for your screw drive. For detailed design information on the screw drive, please contact the screw drive manufacturer.

Axial velocity

The axial velocity of a screw drive can be calculated as follows:

$$v_{ax} = \frac{n_{mot} \cdot P_{st}}{60}$$

The following diagram represents the characteristic curves of screw drives with common pitches that can be implemented with STOBER synchronous servo motors for screw drives.

[5] (depending on the brand of the resolver)

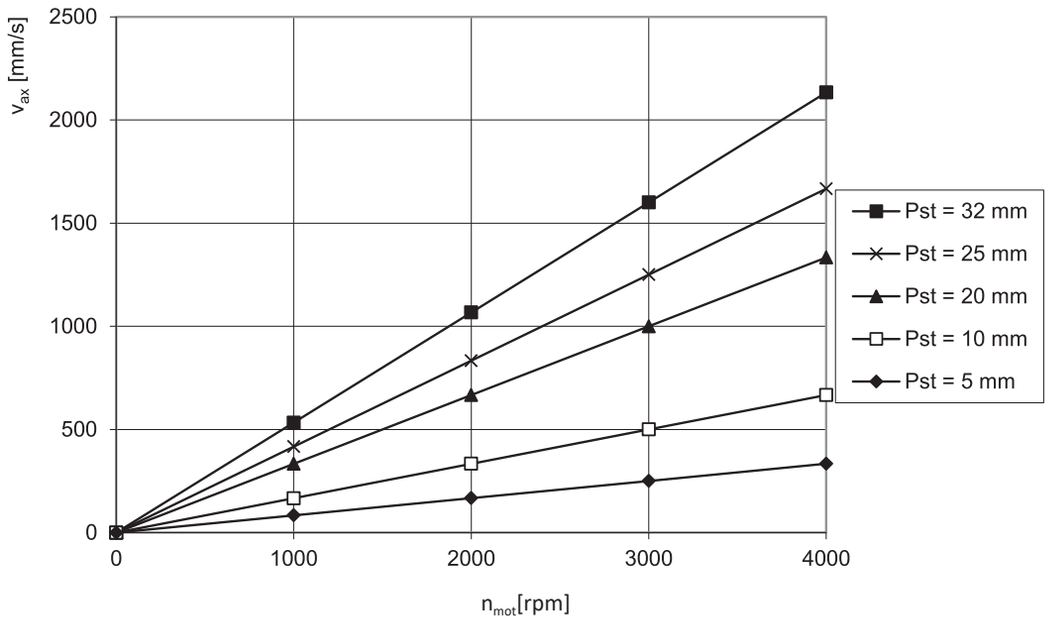

Axial force

The axial force of a screw drive can be calculated as follows:

$$F_{ax} = \frac{2000 \cdot M \cdot \pi \cdot \eta_{gt}}{P_{st}}$$

With a spindle pitch P_{st} = 5, the shrink ring between the motor shaft and threaded spindle can be overloaded when using the maximum torque of EZ502, EZ503, EZ702 or EZ703 motors. To prevent this, the following condition for the maximum permitted axial force F_{ax} must be observed in these application cases. Values for $F_{ax,ss}$ and dh1 can be found in the chapter General features. For more details on the shrink ring, contact the manufacturer Ringfeder.

$$F_{ax} \leq \frac{F_{ax,ss}}{1 + \frac{P_{st}}{\pi \cdot \eta_{gt} \cdot dh1}}$$

You can use the following table to select a motor type / screw drive pitch combination. The axial forces in the table are calculated for M_0 and η_{gt} = 0.9.

	M_0	F_{ax0} P_{st}=5	F_{ax0} P_{st}=10	F_{ax0} P_{st}=15	F_{ax0} P_{st}=20	F_{ax0} P_{st}=25	F_{ax0} P_{st}=32
	[Nm]	[N]	[N]	[N]	[N]	[N]	[N]
EZS501U	4.3	4863	2432	1621	1216	973	760
EZS501B	5.5	6164	3082	2055	1541	1233	963
EZS502U	7.6	8539	4269	2846	2135	1708	1334
EZS502B	10.9	12271	6136	4090	3068	2454	1917
EZS503U	10.7	12045	6022	4015	3011	2409	1882
EZS503B	15.6	17587	8793	5862	4397	3517	2748
EZS701U	7.7	8652	4326	2884	2163	1730	1352
EZS701B	10.2	11479	5740	3826	2870	2296	1794
EZS702U	13.5	15268	7634	5089	3817	3054	2386
EZS702B	19.0	21432	10716	7144	5358	4286	3349
EZS703U	19.7	22280	11140	7427	5570	4456	3481
EZS703B	27.7	31271	15636	10424	7818	6254	4886

If the synchronous servo motor at absolute standstill (n_{mot}=0) must hold the load using its torque, the following formula defines the permitted axial force:

$$F_{ax0,abs} \leq 0.6 \cdot \frac{2000 \cdot M_0 \cdot \pi \cdot \eta_{gt}}{P_{st}}$$

20.7.2 Calculation of the operating point

In this chapter, you can find information needed to calculate the operating point.

The following calculations refer to a representation of the power delivered at the motor shaft based on the following example:

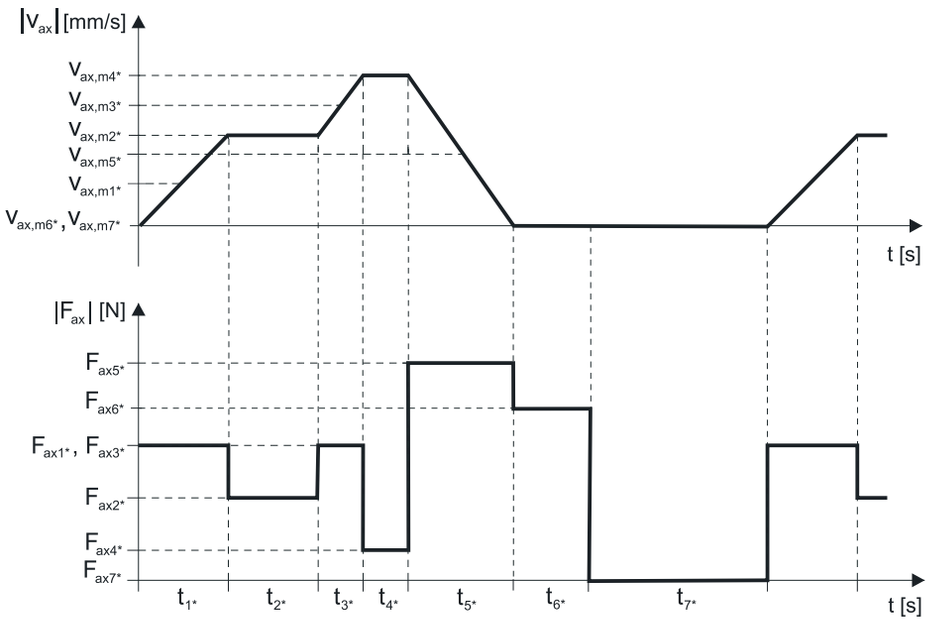

Calculation of the actual average axial velocity

$$v_{ax,m*} = \frac{|v_{ax,m1*}| \cdot t_{1*} + \ldots + |v_{ax,mn*}| \cdot t_{n*}}{t_{1*} + \ldots + t_{n*}}$$

If $t_{1*} + \ldots + t_{6*} \geq 6$ min, determine $v_{ax,m*}$ without the rest phase t_{7*}.

Calculation of the actual average speed

$$n_{m*} = \frac{v_{ax,m*} \cdot 60}{P_{st}}$$

Check the condition $n_{m*} \leq n_N$ and adjust the parameters as needed.

Calculation of the actual effective axial force

$$F_{ax,eff*} = \sqrt{\frac{t_{1*} \cdot F_{ax1*}^{\ 2} + \ldots + t_{n*} \cdot F_{ax,n*}^{\ 2}}{t_{1*} + \ldots + t_{n*}}}$$

Calculation of the actual effective torque

$$M_{eff*} = \frac{F_{ax,eff*} \cdot P_{st}}{2000 \cdot \pi \cdot \eta_{gt}}$$

You can find the value for the torque of the motor at operating point M_{op} with the determined average input speed n_{m*} in the motor curve in Chapter [▶ 19.3]. In doing so, keep the size and cooling type of the motor in mind. The figure below shows an example of reading the torque M_{op} of a motor with convection cooling at the operating point.

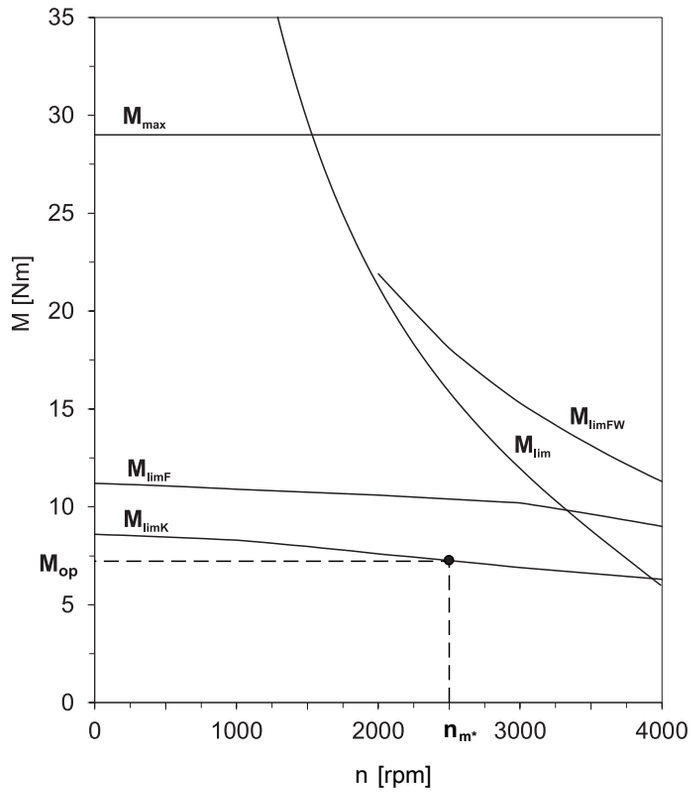

Check the condition: $M_{eff*} \leq M_{op}$ and adjust the parameters as needed.

20.7.3 Calculation of the bearing service life

The service life of the axial angular contact ball bearing of a STOBER synchronous servo motor for screw drives is generally longer than the service life of the screw drive bearing.

You can calculate the service life of the axial angular contact ball bearing as follows (the value for C_{dyn} can be found in the "General features" chapter):

$$L_{10} = \left(\frac{C_{dyn}}{F_{ax,eff*}} \right)^3 \cdot 10^6$$

The following diagram shows the bearing service life L_{10}.

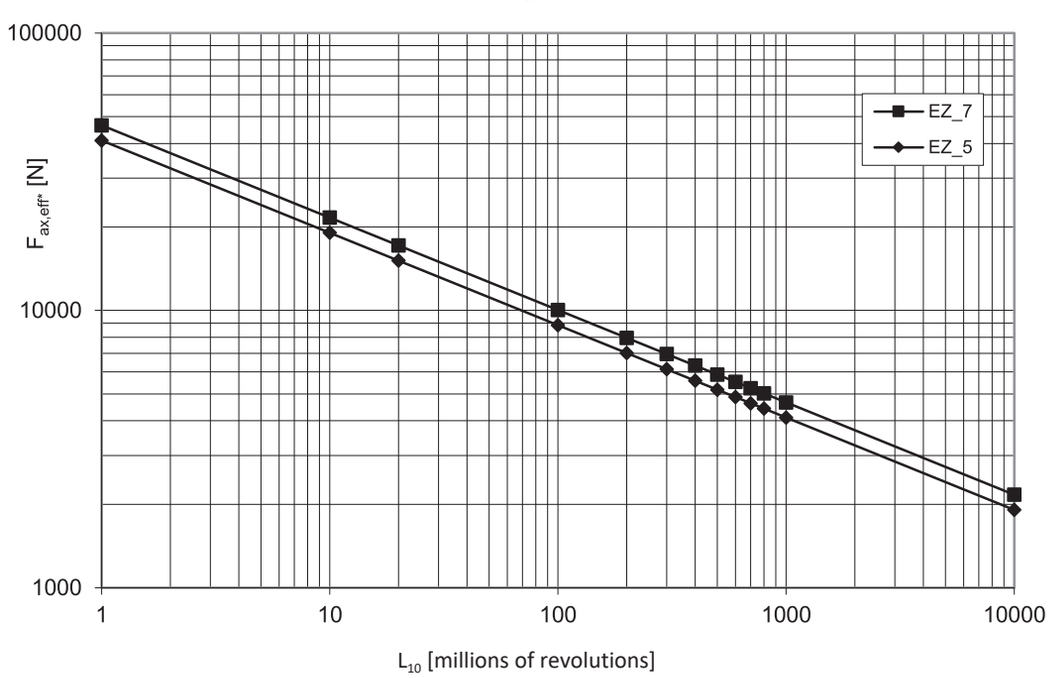

$$L_{10h} = \frac{L_{10}}{n_{m*} \cdot 60}$$

20.8 Further information

20.8.1 Directives and standards

STOBER synchronous servo motors meet the requirements of the following directives and standards:

- (Low Voltage) Directive 2014/35/EU
- EN 60034-1:2010 + Cor.:2010
- EN 60034-5:2001 + A1:2007
- EN 60034-6:1993

20.8.2 Identifiers and test symbols

STOBER synchronous servo motors have the following identifiers and test symbols:

CE mark: The product meets the requirements of EU directives.

cURus test symbol "Servo and Stepper Motors – Component"; registered under UL number E488992 with Underwriters Laboratories USA (optional).

20.8.3 Additional documentation

Additional documentation related to the product can be found at
http://www.stoeber.de/en/downloads/

Enter the ID of the documentation in the Search... field.

Documentation	ID
Operating manual for EZ synchronous servo motors	443032_en

21 Connecting to drive controllers of third-party manufacturers

Table of contents

21.1 General notes ... 626

21.1.1 Nominal data ... 626

21.1.2 Plug connectors ... 627

21.1.3 Connection cables ... 628

21.2 Connection to B&R drive controllers ... 629

21.2.1 Encoders ... 629

21.2.2 Possible combinations with drive controllers ... 630

21.2.3 Connection assignment of the power plug connector ... 631

21.2.4 Connection assignment of the encoder plug connector ... 631

21.2.5 Terminal assignment for plug connectors (One Cable Solution) ... 633

21.3 Connection to Siemens drive controllers ... 634

21.3.1 EIB 3392S interface ... 634

21.3.2 Encoders ... 635

21.3.3 Possible combinations with drive controllers ... 636

21.3.4 Connection assignment of the power plug connector ... 636

21.3.5 Connection assignment of the encoder plug connector ... 637

21.4 Connection to Kollmorgen drive controllers ... 638

21.4.1 Encoders ... 638

21.4.2 Possible combinations with drive controllers ... 638

21.4.3 Connection assignment of the power plug connector ... 638

21.4.4 Connection assignment of the encoder plug connector ... 639

21.5 Connection to Bosch Rexroth drive controllers ... 641

21.5.1 Encoders ... 641

21.5.2 Possible combinations with drive controllers ... 641

21.5.3 Connection assignment of the power plug connector ... 642

21.5.4 Connection assignment of the encoder plug connector ... 643

21.6 Connection to Beckhoff drive controllers ... 644

21.6.1 Encoders ... 644

21.6.2 Possible combinations with drive controllers ... 644

21.6.3 Connection assignment of the power plug connector ... 644

21.6.4 Connection assignment of the encoder plug connector ... 645

21.7 Connection to Allen-Bradley drive controllers ... 646

21.7.1 Encoders ... 646

21.7.2 Possible combinations with drive controllers ... 646

21.7.3 Terminal assignment of the power plug connector ... 646

21.7.4 Terminal assignment of the encoder plug connector ... 647

21.7.5 Terminal assignment for plug connectors (One Cable Solution) ... 648

21.1 General notes

STOBER synchronous servo motors are designed for connection to STOBER drive controllers in the standard version. STOBER offers an extensive assortment of high-quality, trusted power and encoder connection cables for this purpose. However, STOBER synchronous servo motors can also be operated on drive controllers from third-party manufacturers. Notes and information for this purpose can be found in the following chapters. You can find all other information about STOBER synchronous servo motors in the corresponding chapters of this catalog.

21.1.1 Nominal data

Nominal data for synchronous servo motors specified in the selection tables of this catalog were calculated for connecting to STOBER drive controllers. Note that this nominal data may change when STOBER synchronous servo motors are connected to drive controllers of third-party manufacturers. The following drive controller plug connectors are determining factors here:

- f_{2PU}
- $f_{PWM,PU}$
- U_{ZK}
- Compensation of the field weakening range.

The maximum achievable speed of a synchronous servo motor depends on the number of pole pairs (p) of the synchronous servo motor and, if applicable, on the restriction of f_{2PU} by Regulation (EC) No. 428/2009 (EC Dual Use Regulation). Details are shown in the figure below.

Some encoders feature integrated temperature monitoring, the warning and switch-off thresholds of which may overlap with the corresponding values set for the thermal winding protection in the drive controller. In some cases, this may result in an instance where an encoder with internal temperature monitoring forces the motor to shut down, even before the motor has reached its nominal data.

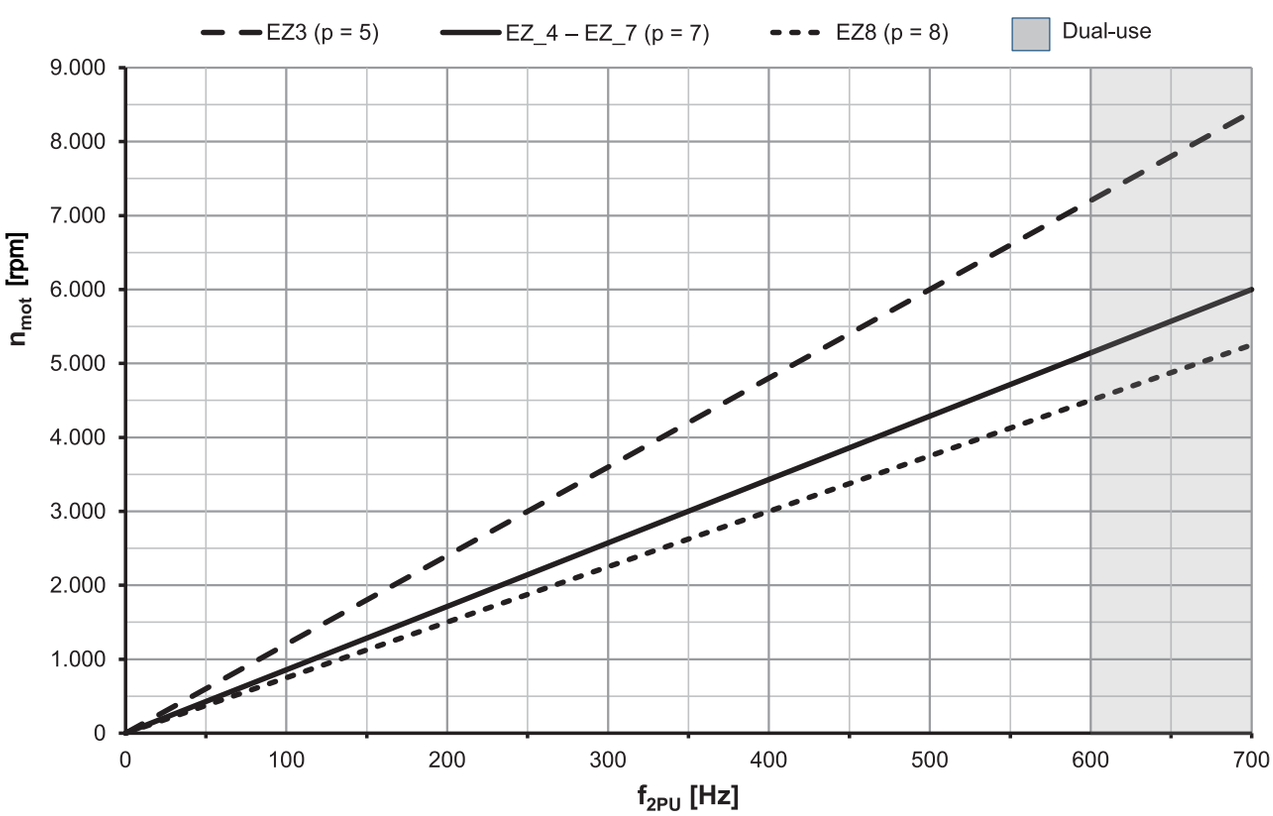

Fig. 1: Speed/frequency graph for EZ motors

21.1.2 Plug connectors

STOBER synchronous servo motors are equipped with angled, round plug connectors (INTERCONTEC brand) for power and encoder connection in the standard version. You can find detailed technical information about the plug connectors at http://www.intercontec.biz.

For motors with forced ventilation, avoid collisions between the motor connection cables and the plug connector of the forced ventilation unit. In the event of a collision, turn the motor plug connectors accordingly. Details regarding the position of the plug connector for the forced ventilation unit can be found in the "Dimensional drawings" chapter.

The figures represent the position of the plug connectors upon delivery.

Turning ranges of plug connectors (EZ3 motors)

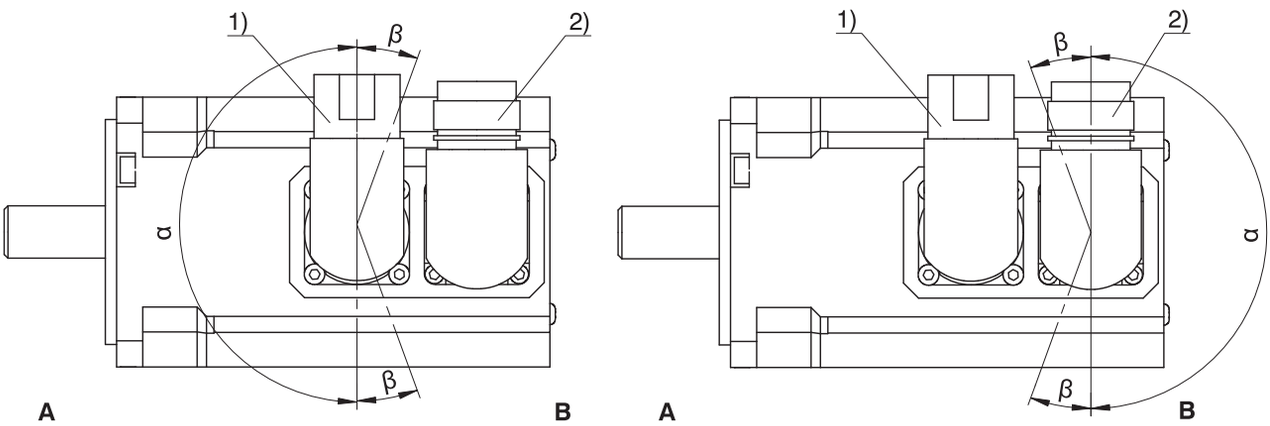

Turning ranges of plug connectors (motors EZ4 – EZ8, EZHD, EZM, EZS)

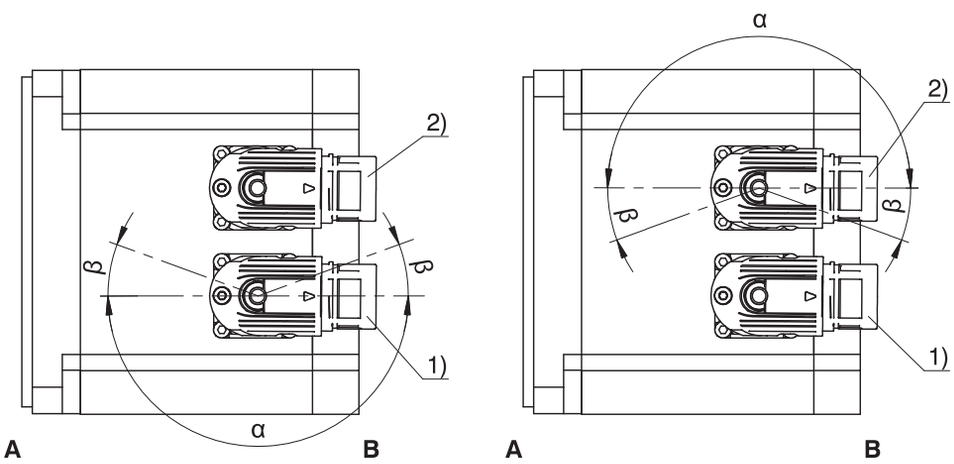

1	Power plug connector	2	Encoder plug connector
A	Attachment or output side of the motor	B	Rear side of the motor

Power plug connector features

Motor type	Size	Connection	Turning range	
			α	β
EZ3 – EZ5, EZ701, EZ703 EZHD_4, EZHD_5, EZHD_711 – EZHD_713 EZM, EZS	con.23	Quick lock	180°	20°
EZ705, EZ802, EZ803, EZ805U EZHD_715	con.40	Quick lock	180°	20°
EZ805B	con.58	Screw thread[1]	0°	0°

[1] Specify the alignment on side A or B in the order.

Encoder plug connector features

Motor type	Size	Connection	Turning range	
			α	β
EZ3 – EZ7, EZ802, EZ803, EZ805U, EZHD, EZM, EZS	con.23[2]	Quick lock	180°	20°
EZ805B	con.23[3]	Quick lock	180°	0°

Notes

- In turning range β, the power or encoder plug connectors can be turned only if doing so does not cause them to collide.
- The number after "con." indicates the approximate external thread diameter of the plug connector in mm (for example, con.23 designates a plug connector with an external thread diameter of about 23 mm).

21.1.3 Connection cables

The plug connectors and connection assignment of STOBER synchronous servo motors are designed for connecting to drive controllers from third-party manufacturers in such a way that allows you to connect the original cable of the respective manufacturer. Keep the following information regarding cable quality and design in mind.

- Because the original cable from Bosch Rexroth cannot be used, STOBER offers suitable cables for this purpose. More detailed information is available from your STOBER customer consultant.
- Ensure that the cable quality and cable design is suitable for the ambient conditions at the installation location.

Electromagnetic compatibility (EMC)

Ensure compliance with statutory EMC requirements for the drive system at the installation location.

Connect the cable shields on both ends of the connection cable. Connect the grounding screw of the synchronous servo motor with the grounding at the installation location.

Power cables

Operation with unsuitable power cables may lead to inadmissibly high voltage peaks, which could damage the motor. For this reason, the capacitances and inductances must match the motor. Recommended values can be found in the table below.

The conductor cross-section of the power cable must be designed appropriately for the stall current of the motor. Details on this can be found in the table below.

Conductor cross-section [mm²]	1.0	1.5	2.5	4.0	6.0	10.0	16.0	25.0
Nominal current [A]	12.5	15.0	20.0	28.3	35.8	49.2	66.7	90.0
Maximum capacitance in accordance with test type A (core/core) [nF/km]	45	55	65	60	70	75	75	Values on request
Maximum capacitance in accordance with test type B (core/residual) [nF/km]	250	300	325	260	300	350	360	Values on request
Maximum inductance (core/core) [µH/km]	800	700	700	600	650	600	570	Values on request

Notes

- The maximum capacitance is specified in accordance with DIN VDE 0472-504. Specifications in accordance with EN 50289-1-5 in preparation.
- The maximum inductance is specified in accordance with EN 50289-1-12.

[2] con.15 for connection to B&R ACOPOSmulti with EnDat 2.2 Interface (drive controller type code GG).

[3] con.15 for connection to B&R ACOPOSmulti with EnDat 2.2 Interface (drive controller type code GG).

Encoder cables

When operating with unsuitable encoder cables, encoder signals can no longer be transferred free of interference. Note the recommended values in the following table.

Signal shape	Digital		Sin-Cos			Resolver	
Conductor cross-section [mm²]	0.14	0.25	0.14	0.25	0.37	0.14	0.25
Maximum capacitance in accordance with test type A (core/core) [nF/km]	30	35	60	110	130	40	50
Maximum capacitance in accordance with test type B (core/remainder) [nF/km]	110	130	300	300	325	300	300
Maximum inductance (core/core) [µH/km]	800	800	650	700	700	800	800
Shielding type of cable	Tin-plated copper braiding						
Shielding type of core pairs	–		Tin-plated copper braiding			Film + braiding	
Cover	≥ 90 %		≥ 80 %			≥ 80 %	

Notes

- The maximum capacitance is specified in accordance with DIN VDE 0472-504. Specifications in accordance with EN 50289-1-5 in preparation.
- The maximum inductance is specified in accordance with EN 50289-1-12.

21.2 Connection to B&R drive controllers

This chapter contains the information for connecting STOBER synchronous servo motors to drive controllers of the above-named manufacturer which differs from connecting to STOBER drive controllers. You can find all other information about STOBER synchronous servo motors in the respective chapter of this catalog.

STOBER has taken the following measures to minimize the effort of commissioning STOBER motors connected to B&R drive controllers and avoid errors during parameterization:

- The commutation offset of the motor was set so that calibration by the customer is not necessary.
- The electronic nameplate of the motor was designed to be compatible with the B&R controllers.

21.2.1 Encoders

Encoders with EnDat 2.2 interface

Encoder model	Code	Measuring method	Recordable revolutions	Resolution	Position values per revolution
EnDat 2.2 EQI 1131 FMA	M4	Inductive	4096	19 bit	524288
EnDat 2.2 EQI 1131	Q6	Inductive	4096	19 bit	524288
EnDat 2.2 EQN 1135 FMA	M3	Optical	4096	23 bit	8388608
EnDat 2.2 EQN 1135	Q5	Optical	4096	23 bit	8388608
EnDat 2.2 ECN 1123 FMA	M1	Optical	–	23 bit	8388608
EnDat 2.2 ECN 1123	C7	Optical	–	23 bit	8388608
EnDat 2.2 ECI 1118-G2	C5	Inductive	–	18 bit	262144
EnDat 2.2 ECI 119-G2	C9	Inductive	–	19 bit	524288

Encoders with EnDat 2.1 interface

Encoder model	Code	Measuring method	Recordable revolutions	Resolution	Position values per revolution	Periods per revolution
EnDat 2.1 ECI 119	C4	Inductive	–	19 bit	524288	Sin/Cos 32
EnDat 2.1 EQN 1125 FMA	M2	Optical	4096	13 bit	8192	Sin/Cos 512
EnDat 2.1 EQN 1125	Q4	Optical	4096	13 bit	8192	Sin/Cos 512
EnDat 2.1 ECN 1113 FMA	M0	Optical	–	13 bit	8192	Sin/Cos 512
EnDat 2.1 ECN 1113	C6	Optical	–	13 bit	8192	Sin/Cos 512

Notes

- The encoder code is a part of the type designation of the motor.
- FMA = Version with fault exclusion for mechanical coupling.
- Encoders with EnDat 2.2 interface and in the FMA design are ready for operation as a one-encoder solution on a safety-related position measuring system with an EnDat 2.2 interface
- Multiple revolutions of the motor shaft can be recorded only using multi-turn encoders.

21.2.2 Possible combinations with drive controllers

The following table shows the possible combinations of STOBER synchronous servo motors with drive controllers from B&R depending on the encoder model.

Drive controller		ACOPOS	ACOPOSmulti (EnDat 2.1)	ACOPOSmulti (EnDat 2.2)	ACOPOS P3 (EnDat 2.2)	ACOPOS P3 OCS (EnDat 2.2)	ACOPOSmulti OCS (EnDat 2.2)
Drive controller code		FG	FV	GG	GY	GP	GV
Connection plan ID		442313	442444	442677	443095	443022	443092
Encoder	**Encoder code**						
EnDat 2.2 EQI 1131 FMA	M4	–	–	EZ, EZS	EZ, EZS	EZ, EZS	EZ, EZS
EnDat 2.2 EQI 1131	Q6	–	–	EZ, EZS	EZ, EZS	EZ, EZS	EZ, EZS
EnDat 2.2 EQN 1135 FMA	M3	–	–	EZ, EZS	EZ, EZS	EZ, EZS	EZ, EZS
EnDat 2.2 EQN 1135	Q5	–	–	EZ, EZS	EZ, EZS	EZ, EZS	EZ, EZS
EnDat 2.2 ECN 1123 FMA	M1	–	–	EZ, EZS	EZ, EZS	EZ, EZS	EZ, EZS
EnDat 2.2 ECN 1123	C7	–	–	EZ, EZS	EZ, EZS	EZ, EZS	EZ, EZS
EnDat 2.2 ECI 1118-G2	C5	–	–	EZ, EZS	EZ, EZS	–	–
EnDat 2.1 ECI 119	C4	–	EZHD, EZM	–	–	–	–
EnDat 2.2 ECI 119-G2	C9	–	–	EZHD, EZM	EZHD, EZM	EZHD, EZM	EZHD, EZM
EnDat 2.1 EQN 1125 FMA	M2	EZ, EZS	EZ, EZS	–	–	–	–
EnDat 2.1 EQN 1125	Q4	EZ, EZS	EZ, EZS	–	–	–	–
EnDat 2.1 ECN 1113 FMA	M0	–	EZ, EZS	–	–	–	–
EnDat 2.1 ECN 1113	C6	–	EZ, EZS	–	–	–	–
Resolver	R0	EZ, EZS	EZ, EZS	–	–	–	–

The encoder and drive controller codes are a part of the type designation of the motor.

21.2.3 Connection assignment of the power plug connector

The size and connection plan of the power plug connector depend on the size of the motor. The colors of the connecting wires inside the motor are specified in accordance with IEC 60757.

Plug connector size con.23

Connection diagram	Pin	Connection	Color
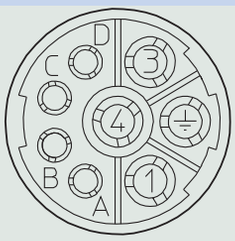	1	U phase	BK
	3	W phase	RD
	4	V phase	BU
	A	Temperature sensor +	
	B	Temperature sensor –	
	C	Brake +	RD
	D	Brake –	BK
	⏚	Grounding conductor	GNYE

Plug connector size con.40 (1.5)

Connection diagram	Pin	Connection	Color
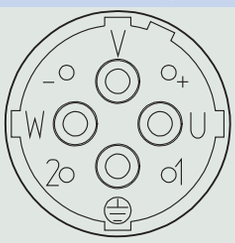	U	U phase	BK
	V	V phase	BU
	W	W phase	RD
	+	Brake +	RD
	–	Brake –	BK
	1	Temperature sensor +	
	2	Temperature sensor –	
	⏚	Grounding conductor	GNYE

Plug connector size con.58 (3)

Connection diagram	Pin	Connection	Color
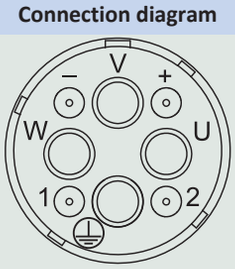	U	U phase	BK
	V	V phase	BU
	W	W phase	RD
	+	Brake +	RD
	–	Brake –	BK
	1	Temperature sensor +	
	2	Temperature sensor –	
	⏚	Grounding conductor	GNYE

21.2.4 Connection assignment of the encoder plug connector

The size and connection assignment of the encoder plug connectors depend on the model of encoder installed and the size of the motor. The colors of the connecting wires inside the motor are specified in accordance with IEC 60757.

EnDat 2.2 digital encoder, plug connector size con.15

Connection diagram	Pin	Connection	Color
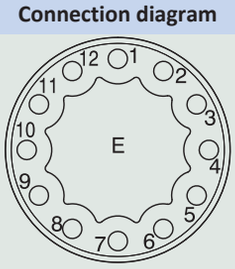	1	Up +	BNGN
	2	Data +	GY
	3	Data –	PK
	4	Clock +	VT
	5	Clock –	YE
	6		
	7	0 V GND	WHGN
	8		
	9		
	10		
	11		
	12		

EnDat 2.1 encoder with sin/cos incremental signals, plug connector size con.23

Connection diagram	Pin	Connection	Color
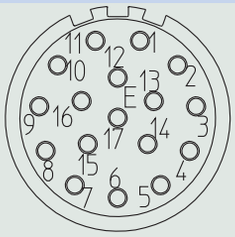	1	Up sense	BU
	2		
	3		
	4	0 V sense	WH
	5		
	6		
	7	Up +	BNGN
	8	Clock +	VT
	9	Clock –	YE
	10	0 V GND	WHGN
	11		
	12	B + (Sin +)	BUBK
	13	B – (Sin –)	RDBK
	14	Data +	GY
	15	A + (Cos +)	GNBK
	16	A – (Cos –)	YEBK
	17	Data –	PK

Resolver, plug connector size con.23

Connection diagram	Pin	Connection	Color
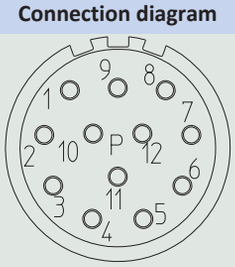	1		
	2		
	3	S4 Sin +	BU
	4	S1 Cos –	RD
	5	R2 Ref +	YEWH
	6		
	7	S2 Sin –	YE
	8	S3 Cos +	BK
	9	R1 Ref –	RDWH
	10		
	11		
	12		

21.2.5 Terminal assignment for plug connectors (One Cable Solution)

In the One Cable Solution design, the power and encoder lines are connected using a shared plug connector.

The temperature sensor of the motor is connected to the encoder internally. The measured values from the temperature sensor are transmitted via the log of the encoder.

Plug connector size con.23

Connection diagram	Pin	Connection	Color
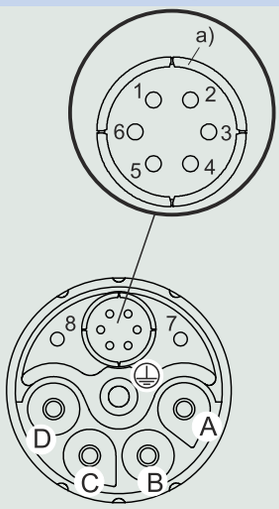	A	U phase	black
	B	V phase	blue
	C	W phase	red
	D		
	1	Up +	browngreen
	2	0 V GND	whitegreen
	3	Data +	grey
	4	Data –	pink
	5	Clock +	violet
	6	Clock –	yellow
	7	Brake –	
	8	Brake +	
	⏚	Grounding conductor	green-yellow

a) Coaxial shield to which the shield of the encoder cores is connected

21.3 Connection to Siemens drive controllers

This chapter contains the information for connecting STOBER synchronous servo motors to drive controllers of the above-named manufacturer which differs from connecting to STOBER drive controllers. You can find all other information about STOBER synchronous servo motors in the respective chapter of this catalog.

STOBER has taken the following measures to minimize the effort of commissioning STOBER motors connected to SINAMICS S120 drive controllers and avoid errors during parameterization:

- The commutation offset of the motor was set so that calibration by the customer is not necessary.
- Parameter lists are provided on request.

21.3.1 EIB 3392S interface

The EIB 3392S interface made by Heidenhain enables the connection of EnDat 2.2 encoders to Siemens SINAMICS S120 drive controllers using the powerful DRIVE-CLiQ system interface. STOBER offers the EIB 3392S interface with the ID 1250663-01. In this design, the connector and the terminal assignment on the EnDat 2.2 side are adapted to STOBER synchronous servo motors so that the interface can be connected and commissioned without additional work.

Advantages

- Support for all DRIVE-CLiQ interface options
- Compact and robust industrial design
- Easy, fast commissioning
- No space or wiring necessary in the control cabinet
- Because the DRIVE-CLiQ electronics are located outside of the motor, it is not necessary to reduce the performance data of the motor based on the temperature.

Features

Feature	Description
Surrounding temperature for operation	0 °C to 60 °C
Protection class	IP 65
Bending radius of the interface connection cable	75 mm, freely movable 20 mm, permanently installed

The EIB 3392S interface is connected to the plug connector of the motor on the EnDat 2.2 side. On the DRIVE-CLiQ side, an original Siemens encoder cable with a length of up to 30 m can be connected.

The EIB 3392S interface may only be connected to motors with a Pt1000 temperature sensor. The temperature sensor is connected to the EnDat 2.2 encoder inside the motor. The EIB 3392S interface transmits the values from the temperature sensor over the DRIVE-CLiQ interface unchanged.

The housing of the EIB 3392S must be attached at the installation location. A cable clip can be used for this purpose (see dimensional drawing).

Functional safety

Depending on the connected encoder and the downstream electronics, the EIB 3392S can be used in safety-oriented applications up to Safety Integrity Level (SIL) 2 in accordance with EN 61508-1 / EN 61800-5-2 or up to Category 3, PL d in accordance with EN ISO 13849-1.

The probability of a failure per hour (PFH) is 26×10^{-9} for an installation altitude ≤ 1000 m above sea level.

The EIB 3392S interface does not have any effect on the safe position that can be implemented by the motor encoder and the downstream electronics.

21.3.1.1 Dimensional drawing

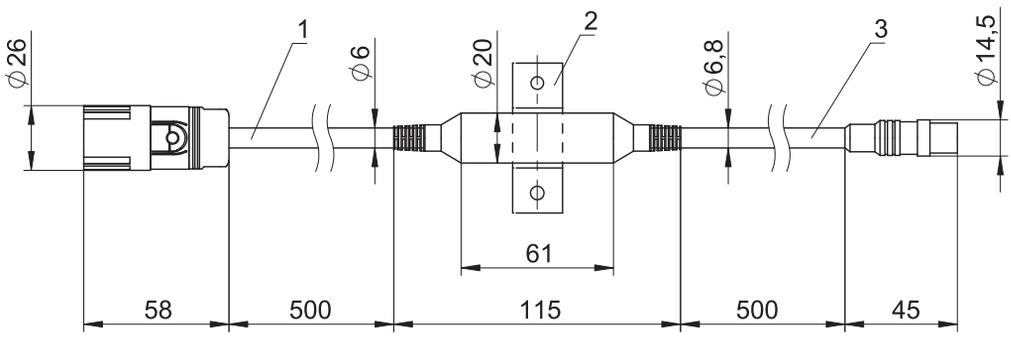

1	Black cable color (EnDat 2.2 side)	2	Cable clip (not included in the scope of delivery)
3	Green cable color (DRIVE-CLiQ side)		

21.3.1.2 Terminal assignment

EnDat 2.2 side, con.23 plug connector			DRIVE-CLiQ side, M12 plug connector		
Connection diagram	Pin	Connection	Connection	Pin	Connection diagram
	1	Clock +	Up +	1	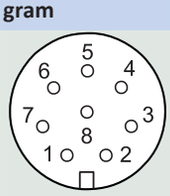
	2			2	
	3		RXP	3	
	4		RXN	4	
	5	Data –	0 V GND	5	
	6	Data +	TXN	6	
	7		TXP	7	
	8	Clock –		8	
	9				
	10	0 V GND			
	11				
	12	Up +			

21.3.2 Encoders

Encoders with EnDat 2.2 interface

Encoders with an EnDat 2.2 interface can be connected to Siemens S120 drive controllers and operated using the EIB 3392S interface.

Encoder model	Code	Measuring method	Recordable revolutions	Resolution	Position values per revolution
EnDat 2.2 EQI 1131 FMA	M4	Inductive	4096	19 bit	524288
EnDat 2.2 EQI 1131	Q6	Inductive	4096	19 bit	524288
EnDat 2.2 EQN 1135 FMA	M3	Optical	4096	23 bit	8388608
EnDat 2.2 EQN 1135	Q5	Optical	4096	23 bit	8388608
EnDat 2.2 ECN 1123 FMA	M1	Optical	–	23 bit	8388608
EnDat 2.2 ECN 1123	C7	Optical	–	23 bit	8388608
EnDat 2.2 ECI 119-G2	C9	Inductive	–	19 bit	524288

Encoders with EnDat 2.1 interface

Encoder model	Code	Measuring method	Recordable revolutions	Resolution	Position values per revolution	Periods per revolution
EnDat 2.1 ECI 119	C4	Inductive	–	19 bit	524288	Sin/Cos 32
EnDat 2.1 EQN 1125 FMA	M2	Optical	4096	13 bit	8192	Sin/Cos 512
EnDat 2.1 EQN 1125	Q4	Optical	4096	13 bit	8192	Sin/Cos 512
EnDat 2.1 ECN 1113 FMA	M0	Optical	–	13 bit	8192	Sin/Cos 512
EnDat 2.1 ECN 1113	C6	Optical	–	13 bit	8192	Sin/Cos 512

Notes

- The encoder code is a part of the type designation of the motor.
- FMA = Version with fault exclusion for mechanical coupling.
- Multiple revolutions of the motor shaft can be recorded only using multi-turn encoders.

21.3.3 Possible combinations with drive controllers

The following table shows the possible combinations of STOBER synchronous servo motors with drive controllers from Siemens depending on the encoder model.

Encoders with an EnDat 2.2 interface can be connected to Siemens S120 drive controllers and operated using the EIB 3392S interface.

Drive controller		**SINAMICS S120** (with EnDat 2.1 and resolver interface)	**SINAMICS S120** (with DRIVE-CLiQ interface)
Drive controller code		FJ	GQ
Connection plan ID		442315	443049
Encoder	**Encoder code**		
EnDat 2.2 EQI 1131 FMA	M4	–	EZ, EZS
EnDat 2.2 EQI 1131	Q6	–	EZ, EZS
EnDat 2.2 EQN 1135 FMA	M3	–	EZ, EZS
EnDat 2.2 EQN 1135	Q5	–	EZ, EZS
EnDat 2.2 ECN 1123 FMA	M1	–	EZ, EZS
EnDat 2.2 ECN 1123	C7	–	EZ, EZS
EnDat 2.2 ECI 119-G2	C9	–	EZHD, EZM
EnDat 2.1 ECI 119	C4	EZHD, EZM	–
EnDat 2.1 EQN 1125 FMA	M2	EZ, EZS	–
EnDat 2.1 EQN 1125	Q4	EZ, EZS	–
EnDat 2.1 ECN 1113 FMA	M0	EZ, EZS	–
EnDat 2.1 ECN 1113	C6	EZ, EZS	–
Resolver	R0	EZ, EZS	–

The encoder and drive controller codes are a part of the type designation of the motor.

21.3.4 Connection assignment of the power plug connector

The size and connection plan of the power plug connector depend on the size of the motor. The colors of the connecting wires inside the motor are specified in accordance with IEC 60757.

Plug connector size con.23

Connection diagram	Pin	Connection	Color
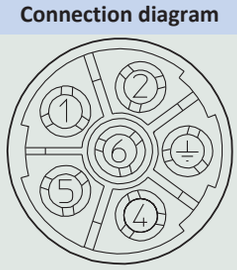	1	U phase	BK
	2	V phase	BU
	4	Brake +	RD
	5	Brake –	BK
	6	W phase	RD
	⏚	Grounding conductor	GNYE

Plug connector size con.40 (1.5)

Connection diagram	Pin	Connection	Color
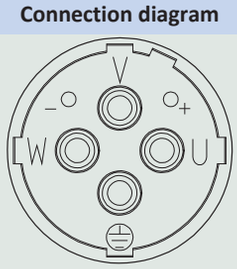	U	U phase	BK
	V	V phase	BU
	W	W phase	RD
	+	Brake +	RD
	–	Brake –	BK
	⏚	Grounding conductor	GNYE

21.3.5 Connection assignment of the encoder plug connector

The size and terminal assignment of the encoder plug connectors depend on the model of encoder installed and the size of the motor.

EnDat 2.2 digital encoder, plug connector size con.23

Encoders with an EnDat 2.2 interface can be connected to Siemens S120 drive controllers and operated using the EIB 3392S interface.

Connection diagram	Pin	Connection	Color
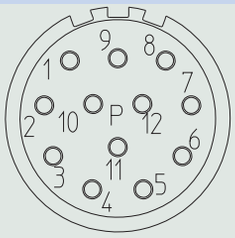	1	Clock +	VT
	2		
	3		
	4		
	5	Data –	PK
	6	Data +	GY
	7		
	8	Clock –	YE
	9		
	10	0 V GND	WHGN
	11		
	12	Up +	BN GN

EnDat 2.1 encoder with sin/cos incremental signals, plug connector size con.23

Connection diagram	Pin	Connection	Color
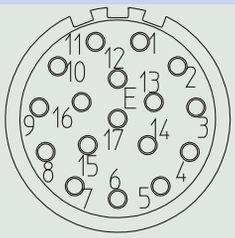	1	A + (Cos +)	GNBK
	2	A – (Cos –)	YEBK
	3	Data +	GY
	4		
	5	Clock +	VT
	6		
	7	0 V GND	WHGN
	8	Temperature sensor +	BK/BN
	9	Temperature sensor –	WH/WH
	10	Up +	BNGN
	11	B + (Sin +)	BUBK
	12	B – (Sin –)	RDBK
	13	Data –	PK
	14	Clock –	YE
	15	0 V sense	WH
	16	Up sense	BU
	17		

Resolver, plug connector size con.23

Connection diagram	Pin	Connection	Color
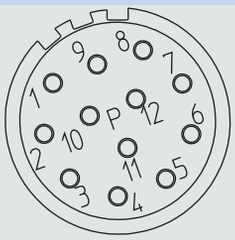	1	S4 Sin +	BU
	2	S2 Sin –	YE
	3		
	4		
	5		
	6		
	7	R1 Ref –	RDWH
	8	Temperature sensor +	BK/BN
	9	Temperature sensor –	WH/WH
	10	R2 Ref +	YEWH
	11	S3 Cos +	BK
	12	S1 Cos –	RD

21.4 Connection to Kollmorgen drive controllers

This chapter contains the information for connecting STOBER synchronous servo motors to drive controllers of the above-named manufacturer which differs from connecting to STOBER drive controllers. You can find all other information about STOBER synchronous servo motors in the respective chapter of this catalog.

STOBER has taken the following measures to minimize the effort of commissioning STOBER motors connected to Kollmorgen drive controllers and avoid errors during parameterization:

- The commutation offset of the motor was set so that calibration by the customer is not necessary.
- Parameter lists are provided on request.

21.4.1 Encoders

Encoders with EnDat 2.1 interface

Encoder model	Code	Measuring method	Recordable revolutions	Resolution	Position values per revolution	Periods per revolution
EnDat 2.1 ECI 119	C4	Inductive	–	19 bit	524288	Sin/Cos 32
EnDat 2.1 EQN 1125 FMA	M2	Optical	4096	13 bit	8192	Sin/Cos 512
EnDat 2.1 EQN 1125	Q4	Optical	4096	13 bit	8192	Sin/Cos 512

Notes

- The encoder code is a part of the type designation of the motor.
- FMA = Version with fault exclusion for mechanical coupling.
- Multiple revolutions of the motor shaft can be recorded only using multi-turn encoders.

21.4.2 Possible combinations with drive controllers

The following table shows the possible combinations of STOBER synchronous servo motors with drive controllers from Kollmorgen depending on the encoder model.

Drive controller		**Servostar S300/S400/S600/S700**
Drive controller code		FE
Connection plan ID		442311
Encoder	**Encoder code**	
EnDat 2.1 ECI 119	C4	EZHD, EZM
EnDat 2.1 EQN 1125 FMA	M2	EZ, EZS
EnDat 2.1 EQN 1125	Q4	EZ, EZS
Resolver	R0	EZ, EZS

The encoder and drive controller codes are a part of the type designation of the motor.

21.4.3 Connection assignment of the power plug connector

The size and connection plan of the power plug connector depend on the size of the motor. The colors of the connecting wires inside the motor are specified in accordance with IEC 60757.

Plug connector size con.23

Connection diagram	Pin	Connection	Color
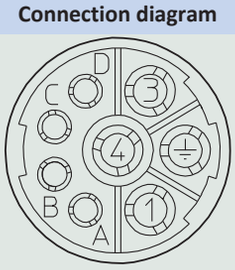	1	U phase	BK
	3	W phase	RD
	4	V phase	BU
	A	Brake +	RD
	B	Brake –	BK
	C		
	D		
	⏚	Grounding conductor	GNYE

Plug connector size con.40 (1.5)

Connection diagram	Pin	Connection	Color
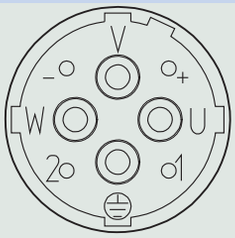	U	U phase	BK
	V	V phase	BU
	W	W phase	RD
	+	Brake +	RD
	–	Brake –	BK
	1		
	2		
	⏚	Grounding conductor	GNYE

Plug connector size con.58 (3)

Connection diagram	Pin	Connection	Color
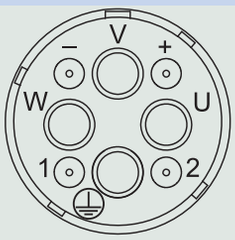	U	U phase	BK
	V	V phase	BU
	W	W phase	RD
	+	Brake +	RD
	–	Brake –	BK
	1		
	2		
	⏚	Grounding conductor	GNYE

21.4.4 Connection assignment of the encoder plug connector

The size and connection assignment of the encoder plug connectors depend on the model of encoder installed and the size of the motor.

EnDat 2.1 encoder with sin/cos incremental signals, plug connector size con.23

Connection diagram	Pin	Connection	Color
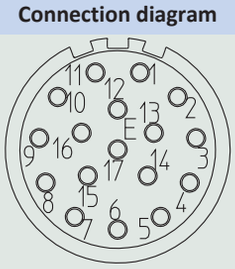	1	B – (Sin –)	RDBK
	2	0 V GND	WHGN
	3	A – (Cos –)	YEBK
	4	Up +	BNGN
	5	Data +	GY
	6		
	7	1TP1 (Temperature sensor +)	BK/RD
	8	Clock +	VT
	9	B + (Sin +)	BUBK
	10	0 V sense	WH
	11	A + (Cos +)	GNBK
	12	Up sense	BU
	13	Data –	PK
	14	1TP2 (Temperature sensor –)	WH/WH
	15	Clock –	YE
	16		
	17		

Resolver, plug connector size con.23

Connection diagram	Pin	Connection	Color
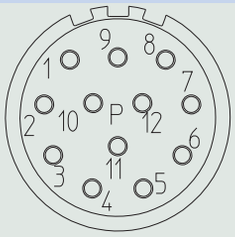	1		
	2	1TP1 (Temperature sensor +)	BK/RD
	3	S4 Sin +	BU
	4	S3 Cos +	BK
	5	R2 Ref +	YEWH
	6	1TP2 (Temperature sensor –)	WH/WH
	7	S2 Sin –	YE
	8	S1 Cos –	RD
	9	R1 Ref –	RDWH
	10		
	11		
	12		

21.5 Connection to Bosch Rexroth drive controllers

This chapter contains the information for connecting STOBER synchronous servo motors to drive controllers of the above-named manufacturer which differs from connecting to STOBER drive controllers. You can find all other information about STOBER synchronous servo motors in the respective chapter of this catalog.

STOBER has taken the following measures to minimize the effort of commissioning STOBER motors connected to IndraDrive C/Cs drive controllers and avoid errors during parameterization:

- The commutation offset of the motor was set so that calibration by the customer is not necessary.
- Parameter lists are provided on request.

21.5.1 Encoders

Encoders with EnDat 2.1 interface

Encoder model	Code	Measuring method	Recordable revolutions	Resolution	Position values per revolution	Periods per revolution
EnDat 2.1 ECI 119	C4	Inductive	–	19 bit	524288	Sin/Cos 32
EnDat 2.1 EQN 1125 FMA	M2	Optical	4096	13 bit	8192	Sin/Cos 512
EnDat 2.1 EQN 1125	Q4	Optical	4096	13 bit	8192	Sin/Cos 512
EnDat 2.1 ECN 1113 FMA	M0	Optical	–	13 bit	8192	Sin/Cos 512
EnDat 2.1 ECN 1113	C6	Optical	–	13 bit	8192	Sin/Cos 512

Encoders with HIPERFACE interface

Encoder model	Code	Measuring method	Recordable revolutions	Resolution	Position values per revolution	Periods per revolution
SKM36	H1	Optical	4096	12 bit	4096	Sin/Cos 128
SEK90	H4	Capacitive	–	11 bit	2048	Sin/Cos 64

Notes

- The encoder code is a part of the type designation of the motor.
- FMA = Version with fault exclusion for mechanical coupling.
- Multiple revolutions of the motor shaft can be recorded only using multi-turn encoders.

21.5.2 Possible combinations with drive controllers

The following table shows the possible combinations of STOBER synchronous servo motors with drive controllers from Bosch Rexroth depending on the encoder model.

Drive controller		**IndraDrive C/Cs**
Drive controller code		FW
DC link voltage U_{ZK}		540 V
Connection plan ID		442445
Encoder	**Encoder code**	
EnDat 2.1 ECI 119	C4	EZHD, EZM
EnDat 2.1 EQN 1125 FMA	M2	EZ, EZS
EnDat 2.1 EQN 1125	Q4	EZ, EZS
EnDat 2.1 ECN 1113 FMA	M0	EZ, EZS
EnDat 2.1 ECN 1113	C6	EZ, EZS
SKM36	H1	EZ, EZS
SEK90	H4	EZHD, EZM

The encoder and drive controller codes are a part of the type designation of the motor.

21.5.3 Connection assignment of the power plug connector

The size and connection plan of the power plug connector depend on the size of the motor. The colors of the connecting wires inside the motor are specified in accordance with IEC 60757.

Plug connector size con.23

Connection diagram	Pin	Connection	Color
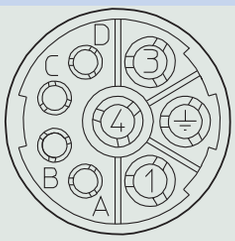	1	U phase	BK
	3	V phase	BU
	4	W phase	RD
	A	Brake +	RD
	B	Brake –	BK
	C	Temperature sensor +	
	D	Temperature sensor –	
	⏚	Grounding conductor	GNYE

Plug connector size con.40 (1.5)

Connection diagram	Pin	Connection	Color
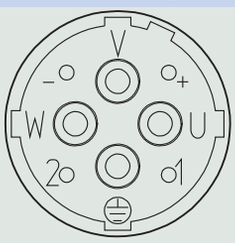	U	U phase	BK
	V	V phase	BU
	W	W phase	RD
	+	Brake +	RD
	–	Brake –	BK
	1	Temperature sensor +	
	2	Temperature sensor –	
	⏚	Grounding conductor	GNYE

Plug connector size con.58 (3)

Connection diagram	Pin	Connection	Color
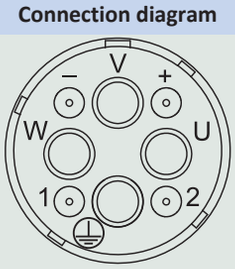	U	U phase	BK
	V	V phase	BU
	W	W phase	RD
	+	Brake +	RD
	–	Brake –	BK
	1	Temperature sensor +	
	2	Temperature sensor –	
	⏚	Grounding conductor	GNYE

21.5.4 Connection assignment of the encoder plug connector

The size and connection assignment of the encoder plug connectors depend on the model of encoder installed and the size of the motor. The colors of the connecting wires inside the motor are specified in accordance with IEC 60757.

EnDat 2.1 encoder with sin/cos incremental signals, plug connector size con.23

This connection assignment only applies to the IndraDrive C/Cs drive controller.

Connection diagram	Pin	Connection	Color
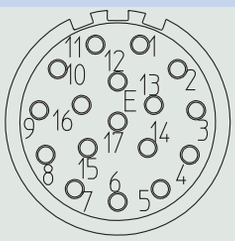	1	Up sense	BU
	2		
	3		
	4	0 V sense	WH
	5		
	6		
	7	Up +	BNGN
	8	Clock +	VT
	9	Clock –	YE
	10	0 V GND	WHGN
	11		
	12	B + (Sin +)	BUBK
	13	B – (Sin –)	RDBK
	14	Data +	GY
	15	A + (Cos +)	GNBK
	16	A – (Cos –)	YEBK
	17	Data –	PK

Hiperface encoder, plug connector size con.23

Connection diagram	Pin	Connection	Color
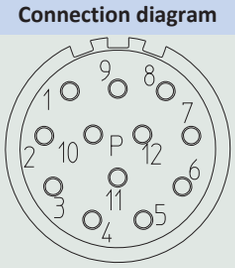	1	Us	RD
	2	0 V GND	BU
	3	REFSIN	BN
	4	REFCOS	BK
	5	Data +	GY
	6	Data –	GN
	7	+ SIN	WH
	8	+ COS	PK
	9		
	10		
	11		
	12		

21.6 Connection to Beckhoff drive controllers

This chapter contains the information for connecting STOBER synchronous servo motors to drive controllers of the above-named manufacturer which differs from connecting to STOBER drive controllers. You can find all other information about STOBER synchronous servo motors in the respective chapter of this catalog.

STOBER has taken the following measures to minimize the effort of commissioning STOBER motors connected to AX5000 drive controllers and avoiding errors during parameterization:

- The commutation offset of the motor was set so that calibration by the customer is not necessary.
- The electronic nameplate of the motor was designed to be compatible with the AX5000.
- Parameter files for all supported motor versions are available for download.

More information on commissioning EZ motors connected to Beckhoff AX5000 drive controllers can be found in the 443185_en document in the download area on the STOBER website.

21.6.1 Encoders

Encoders with EnDat 2.1 interface

Encoder model	Code	Measuring method	Recordable revolutions	Resolution	Position values per revolution	Periods per revolution
EnDat 2.1 ECI 119	C4	Inductive	–	19 bit	524288	Sin/Cos 32
EnDat 2.1 EQN 1125 FMA	M2	Optical	4096	13 bit	8192	Sin/Cos 512
EnDat 2.1 EQN 1125	Q4	Optical	4096	13 bit	8192	Sin/Cos 512
EnDat 2.1 ECN 1113 FMA	M0	Optical	–	13 bit	8192	Sin/Cos 512
EnDat 2.1 ECN 1113	C6	Optical	–	13 bit	8192	Sin/Cos 512

Notes

- The encoder code is a part of the type designation of the motor.
- FMA = Version with fault exclusion for mechanical coupling.
- Multiple revolutions of the motor shaft can be recorded only using multi-turn encoders.

21.6.2 Possible combinations with drive controllers

The following table shows the possible combinations of STOBER synchronous servo motors with drive controllers from Beckhoff depending on the encoder model.

Drive controller		**AX5000**
Drive controller code		FM
Connection plan ID		442318
Encoder	**Encoder code**	
EnDat 2.1 ECI 119	C4	EZHD, EZM
EnDat 2.1 EQN 1125 FMA	M2	EZ, EZS
EnDat 2.1 EQN 1125	Q4	EZ, EZS
EnDat 2.1 ECN 1113 FMA	M0	EZ, EZS
EnDat 2.1 ECN 1113	C6	EZ, EZS

The encoder and drive controller codes are a part of the type designation of the motor.

21.6.3 Connection assignment of the power plug connector

The size and connection plan of the power plug connector depend on the size of the motor. The colors of the connecting wires inside the motor are specified in accordance with IEC 60757.

Plug connector size con.23

Connection diagram	Pin	Connection	Color
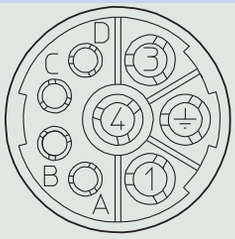	1	U phase	BK
	3	W phase	RD
	4	V phase	BU
	A	Brake +	RD
	B	Brake –	BK
	C	Temperature sensor +	
	D	Temperature sensor –	
	⏚	Grounding conductor	GNYE

Plug connector size con.40 (1.5)

Connection diagram	Pin	Connection	Color
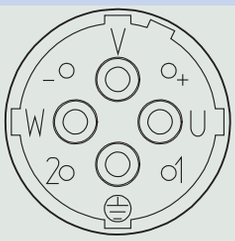	U	U phase	BK
	V	V phase	BU
	W	W phase	RD
	+	Brake +	RD
	–	Brake –	BK
	1	Temperature sensor +	
	2	Temperature sensor –	
	⏚	Grounding conductor	GNYE

21.6.4 Connection assignment of the encoder plug connector

The size and connection assignment of the encoder plug connectors depend on the model of encoder installed and the size of the motor.

EnDat 2.1 encoder with sin/cos incremental signals, plug connector size con.23

Connection diagram	Pin	Connection	Color
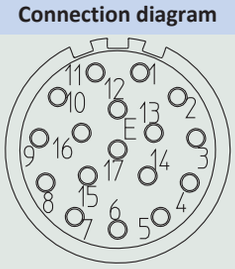	1	B – (Sin –)	RDBK
	2	0 V GND	WHGN
	3	A – (Cos –)	YEBK
	4	Up +	BNGN
	5	Data +	GY
	6		
	7		
	8	Clock +	VT
	9	B + (Sin +)	BUBK
	10	0 V sense	WH
	11	A + (Cos +)	GNBK
	12	Up sense	BN
	13	Data –	PK
	14		
	15	Clock –	YE
	16		
	17		

21.7 Connection to Allen-Bradley drive controllers

This chapter contains the information for connecting STOBER synchronous servo motors to drive controllers of the above-named manufacturer which differs from connecting to STOBER drive controllers. You can find all other information about STOBER synchronous servo motors in the respective chapter of this catalog.

The following STOBER series can be configured to Kinetix 5500/5700/6500 drive controllers fully automatically: EZ geared motors; EZHD, EZM, EZS motors. This does not include EZ motors without an attached gear unit and other STOBER series.

STOBER has taken the following measures to minimize the effort of commissioning STOBER motors connected to Allen-Bradley drive controllers and avoid errors during parameterization:

- The commutation offset of the motor was set so that calibration by the customer is not necessary.
- The electronic nameplate of the motor was designed to be compatible with the Kinetix 5500/5700/6500.
- STOBER tests the motor connected to Allen-Bradley drive controllers before delivery to the customer.
- Configuration files for supported motor versions are available for download.

21.7.1 Encoders

Encoders with EnDat 2.2 interface

Encoder model	Code	Measuring method	Recordable revolutions	Resolution	Position values per revolution
EnDat 2.2 EQN 1135	Q5	Optical	4096	23 bit	8388608
EnDat 2.2 ECI 119-G2	C9	Inductive	–	19 bit	524288

Encoders with HIPERFACE interface

Encoder model	Code	Measuring method	Recordable revolutions	Resolution	Position values per revolution
EDM35	H6	Optical	4096	20 bit	1048576

Notes

- The encoder code is a part of the type designation of the motor.
- Multiple revolutions of the motor shaft can be recorded only using multi-turn encoders.

21.7.2 Possible combinations with drive controllers

The following table shows the possible combinations of STOBER motors and geared motors with drive controllers from Allen-Bradley depending on the encoder model.

Drive controller		KINETIX 5500 (with HIPERFACE DSL)	KINETIX 5700 (with HIPERFACE DSL)	KINETIX 5700 (with EnDat 2.2)	KINETIX 6500 (with EnDat 2.2)
Drive controller code		HB	GD	HA	GC
Connection plan ID		443169	442449	443096	442448
Encoder	**Encoder code**				
EnDat 2.2 EQN 1135	Q5	–	–	EZ, EZS	EZ, EZS
EnDat 2.2 ECI 119-G2	C9	–	–	EZHD, EZM	EZHD, EZM
EDM35	H6	EZ, EZS	EZ, EZS	–	–

The encoder and drive controller codes are a part of the type designation of the motor.

21.7.3 Terminal assignment of the power plug connector

The size and connection plan of the power plug connector depend on the size of the motor. The colors of the connecting wires inside the motor are specified in accordance with IEC 60757.

Plug connector size con.23

Connection diagram	Pin	Connection	Color
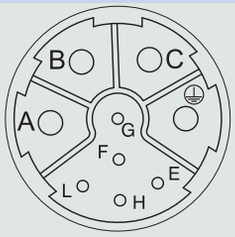	A	1U1 (U phase)	BK
	B	1V1 (V phase)	RD
	C	1W1 (W phase)	BU
	F	MBRK + (1BD1)	RD
	G	MBRK – (1BD2)	BK
	E		
	H		
	L		
	⏚	PE (grounding conductor)	GNYE

Plug connector size con.40 (1.5)

Connection diagram	Pin	Connection	Color
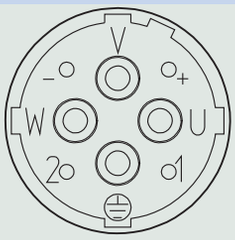	U	1U1 (U phase)	BK
	V	1V1 (V phase)	BU
	W	1W1 (W phase)	RD
	+	MBRK + (1BD1)	RD
	–	MBRK – (1BD2)	BK
	1		
	2		
	⏚	PE (grounding conductor)	GNYE

Plug connector size con.58 (3)

Connection diagram	Pin	Connection	Color
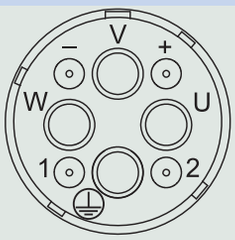	U	1U1 (U phase)	BK
	V	1V1 (V phase)	BU
	W	1W1 (W phase)	RD
	+	MBRK + (1BD1)	RD
	–	MBRK – (1BD2)	BK
	1		
	2		
	⏚	PE (grounding conductor)	GNYE

21.7.4 Terminal assignment of the encoder plug connector

EnDat 2.2 digital encoder, plug connector size con.23

Connection diagram	Pin	Connection	Color
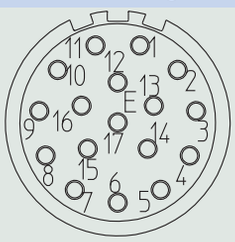	1		
	2		
	3		
	4		
	5	DATA +	GY
	6	DATA –	PK
	7	CLK + (Clock +)	VT
	8	CLK – (Clock –)	YE
	9	EPWR_5V (Up +)	BNGN
	10	ECOM (0 V)	WHGN
	11		
	12		
	13	TS + (1TP1)	BK
	14	TS – (1TP2)	WH
	15		
	16		
	17		

21.7.5 Terminal assignment for plug connectors (One Cable Solution)

In the One Cable Solution design, the power and encoder lines are connected using a shared plug connector.

The size of the plug connector depends on the size of the motor.

The temperature sensor of the motor is connected to the encoder internally. The measured values from the temperature sensor are transmitted via the log of the encoder.

Plug connector size con.23

Connection diagram	Pin	Connection	Color
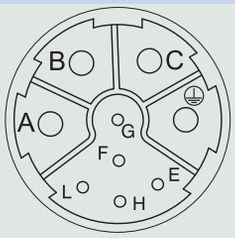	A	1U1 (U phase)	BK
	B	1V1 (V phase)	BU
	C	1W1 (W phase)	RD
	E	DATA + (DSL +)	GY
	F	MBRK + (1BD1)	RD
	G	MBRK – (1BD2)	BK
	H	DATA – (DSL –)	GN
	L		
	⏚	PE (grounding conductor)	GNYE

Plug connector size con.40 (1.5)

Connection diagram	Pin	Connection	Color
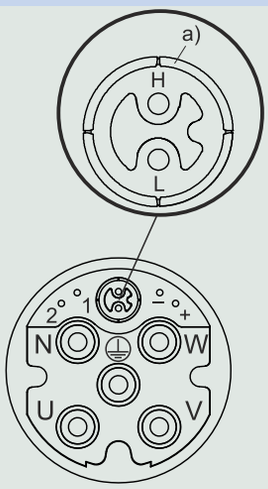	U	1U1 (U phase)	BK
	V	1V1 (V phase)	BU
	W	1W1 (W phase)	RD
	N		
	+		
	–		
	1	MBRK + (1BD1)	RD
	2	MBRK – (1BD2)	BK
	H	DATA – (DSL –)	GY
	L	DATA + (DSL +)	GN
	⏚	PE (grounding conductor)	GNYE

a) Coaxial shield to which the DSL shield is connected

22

Close to customers around the world

We offer you committed, expert advice and support and are available around the clock if service is required:

- 4 sales centers in Germany
- Worldwide presence in over 40 countries
- STOBER SERVICE NETWORK with over 80 service partners worldwide

Germany

STÖBER Antriebstechnik GmbH + Co. KG

Kieselbronner Strasse 12

75177 Pforzheim

Phone: +49 7231 582-0

sales@stoeber.de

www.stober.com

Service hotline: +49 7231 582-3000

Subsidiaries

STOBER AUSTRIA www.stoeber.at Phone +43 7613 7600-0 sales@stoeber.at	**STOBER SOUTH EAST ASIA** www.stober.sg sales@stober.sg
STOBER CHINA www.stoeber.cn Phone +86 512 5320 8850 sales@stoeber.cn	**STOBER SWITZERLAND** www.stoeber.ch Phone +41 56 496 96 50 sales@stoeber.ch
STOBER FRANCE www.stober.fr Phone +33 4 78.98.91.80 sales@stober.fr	**STOBER TAIWAN** www.stober.tw Phone +886 4 2358 6089 sales@stober.tw
STOBER ITALY www.stober.it Phone +39 02 93909570 sales@stober.it	**STOBER TURKEY** www.stober.com Phone +90 216 510 2290 sales-turkey@stober.com
STOBER JAPAN www.stober.co.jp Phone +81 3 5875 7583 sales@stober.co.jp	**STOBER UNITED KINGDOM** www.stober.co.uk Phone +44 1543 458 858 sales@stober.co.uk
STOBER USA www.stober.com Phone +1 606 759 5090 sales@stober.com	

23 Appendix

Table of contents

23.1 Symbols in formulas 654

23.2 Trademarks 658

23.3 Sales terms and delivery conditions 658

23.4 Publication details 658

23.1 Symbols in formulas

The formula symbols for values actually present in the application are marked with *.

Symbol	Unit	Explanation
a_{th}	–	Parameter for calculating $K_{mot,th}$
a_{thEL}	–	Parameters for calculating $K_{mot,th}$ (dependent on the mounting position)
B_{10}	–	Number of cycles after which 10% of components have failed
B_{10D}	–	Number of cycles until 10% of components have failed dangerously
C_2	Nm/ arcmin	Torsional stiffness relative to the gear unit output
C_{2k}	Nm/arcmin	Tilting stiffness
C_{dyn}	N	Dynamic bearing load rating
ΔJ_B	$kgcm^2$	Additive mass moment of inertia of a motor with brake
Δm_B	kg	Additive weight of a motor with brake
$\Delta\phi_2$	arcmin	Backlash at the output shaft with a blocked input
$\Delta\phi_{2red}$	arcmin	Reduced backlash at the output shaft with a blocked input
$\Delta\phi_{2redI}$	arcmin	Reduced backlash (backlash class I) at the output shaft with a blocked input
$\Delta\phi_{2redII}$	arcmin	Reduced backlash (backlash class II) at the output shaft with a blocked input
$\Delta\vartheta$	K	Temperature difference
η_{get}	%	Efficiency of the gear unit at nominal torque
η_{gt}	%	Efficiency of the screw drive
ED_{10}	%	Duty cycle based on 10 minutes
F_{2ax*}	N	Actual axial force at the gear unit output
F_{2ax100}	N	Permitted axial force at the gear unit output for $n_{2m*} \leq 100$ rpm (without radial force)
F_{2ax20}	N	Permitted axial force at the gear unit output for $n_{2m*} \leq 20$ rpm (without radial force)
$F_{2ax,eq*}$	N	Actual equivalent axial force on the gear unit output
F_{2axN}	N	Permitted nominal axial force at the gear unit output (without radial force)
f_{2PU}	Hz	Output frequency of the power unit
$f_{PWM,PU}$	Hz	Frequency of the pulse width modulation of the power unit
F_{2rad*}	N	Actual radial force on the gear unit output
$F_{2rad100}$	N	Permitted radial force at the gear unit output for $n_{2m*} \leq 100$ rpm
F_{2rad20}	N	Permitted radial force on the gear unit output for $n_{2m*} \leq 20$ rpm
$F_{2rad,acc}$	N	Permitted radial acceleration force at the gear unit output
$F_{2rad,acc*}$	N	Radial acceleration force present at the gear unit output
$F_{2rad,acc,1*}$	N	Radial acceleration force present at the gear unit output in the first time period
$F_{2rad,acc,n*}$	N	Radial acceleration force present at the gear unit output in the nth time period
$F_{2rad,eq*}$	N	Actual equivalent force at the gear unit output
F_{2radN}	N	Permitted nominal radial force at the gear unit output
F_{ax}	N	Permitted axial force on the output
F_{ax0}	N	Permitted axial force when the motor is at a standstill for holding the load using the motor torque
$F_{ax1*} – F_{axn*}$	N	Actual axial force in the respective time segment
F_{ax100}	N	Permitted axial force on the output for $n_{m*} \leq 100$ rpm
F_{ax300}	N	Permitted axial force on the output for $n_{m*} \leq 300$ rpm
$F_{ax,eff*}$	N	Actual effective axial force on the output
$F_{ax,ss}$	N	Axial force that can be transmitted by the shrink ring
fB_{op}	–	Operating mode operating factor
fB_t	–	Runtime operating factor
fB_T	–	Temperature operating factor
fB_{ZB}	–	Operating factor for cyclic operation
F_{rad}	N	Permitted radial force on the output
F_{rad100}	N	Permitted radial force on the output for $n_{m*} \leq 100$ rpm
F_{rad300}	N	Permitted radial force on the output for $n_{m*} \leq 300$ rpm
H	m	Installation altitude above sea level

Symbol	Unit	Explanation
i	–	Gear ratio
i_{exact}	–	Mathematically exact gear ratio
I_0	A	Stall current
I_{max}	A	Maximum current
I_N	A	Nominal current
$I_{N,B}$	A	Nominal current of the brake at 20 °C
$I_{N,F}$	A	Nominal current of the forced ventilation unit
J_1	$kgcm^2$	Mass moment of inertia relative to the gear unit input
J_{Bstop}	$kgcm^2$	Reference mass moment of inertia when braking from full speed: $J_{Bstop} = J_{dyn} \times 2$
J_{dyn}	$kgcm^2$	Mass moment of inertia of a motor in dynamic operation
J_{tot}	$kgcm^2$	Total mass moment of inertia (based on the motor shaft)
K_{EM}	V/1000 rpm	Voltage constant: peak value of the induced voltage between the phases U, V, W of the motor at operating temperature at a speed of 1000 rpm
K_H	–	Derating factor for installation altitude
K_{M0}	Nm/A	Torque constant: ratio of the stall torque and frictional torque to the stall current; $K_{M0} = (M_0 + M_R) / I_0$ (tolerance ±10%)
$K_{M,N}$	Nm/A	Torque constant: ratio of the nominal torque M_N to the nominal current I_N; $K_{M,N} = M_N / I_N$ (tolerance ±10%)
$K_{mot,th}$	–	Factor for determining the thermal limit torque
K_ϑ	–	Derating factor for surrounding temperature
l	mm	Length of the output shaft
L_{10}	–	Nominal bearing service life for a survival probability of 90% in 10^6 rollovers
L_{10h}	h	Bearing service life
$L_{pA,F}$	dBA	Noise level of the forced ventilation unit in the optimal operating range
L_{U-V}	mH	Winding inductance of a motor between two phases (determined in a resonant circuit)
LW	-	Load change: A load change (LW) corresponds to an acceleration and a deceleration.
m	kg	Weight (for gear units without lubricant)
M_0	Nm	Stall torque: The continuous torque the motor is able to deliver at a speed of 10 rpm (tolerance ±5%)
$\lvert M_2 \rvert$	Nm	Amount of torque on the output
$M_{2.0}$	Nm	Stall torque on the gear unit output
$M_{2.1*} – M_{2.8*}$	Nm	Actual torque in the respective time segment (1 to 8)
$M_{2,n*}$	Nm	Actual torque in the n-th time segment
M_{2acc}	Nm	Maximum permitted acceleration torque on the gear unit output
M_{2acc*}	Nm	Actual acceleration torque on the gear unit output
$M_{2acc,max}$	Nm	Maximum permitted acceleration torque of a group of geared motors whose size and nominal torque n_{1N} are the same
M_{2accHT}	Nm	Maximum permitted acceleration torque on the gear unit output with reduced backlash
M_{2eff*}	Nm	Actual effective torque on the gear unit output
M_{2eq*}	Nm	Equivalent torque present on the gear unit output
M_{2k*}	Nm	Actual tilting torque on the gear unit output
M_{2k100}	Nm	Permitted tilting torque on the gear unit output for $n_{2m*} \leq 100$ rpm
M_{2k20}	Nm	Permitted tilting torque on the gear unit output for $n_{2m*} \leq 20$ rpm
$M_{2k,acc}$	Nm	Permitted acceleration tilting torque at the gear unit output
$M_{2k,acc*}$	Nm	Acceleration tilting torque present at the gear unit output
$M_{2k,acc,1*}$	Nm	Acceleration tilting torque present at the gear unit output in the first time period
$M_{2k,acc,n*}$	Nm	Acceleration tilting torque present at the gear unit output in the nth time period
$M_{2k,eq*}$	Nm	Actual equivalent tilting torque on the gear unit output
M_{2kN}	Nm	Permitted nominal tilting torque at the gear unit output
M_{2max}	Nm	Maximum torque at the gear unit output
M_{2N}	Nm	Nominal torque on the gear unit output (relative to n_{1N})

Symbol	Unit	Explanation
M_{2NOT}	Nm	Gear unit emergency-off torque on the gear unit output for max. 1000 load changes
		Without consideration of the maximum torque of the motor
M_{2NOT*}	Nm	Actual emergency off torque for the gear unit on the gear unit output
M_{2th}	Nm	Thermal limit torque on the gear unit output
M_{Bdyn}	Nm	Dynamic braking torque at 100 °C (Tolerance +40%, −20%)
M_{Bstat}	Nm	Static braking torque of the motor brake at 100 °C (tolerance +40%, −20%)
m_{dyn}	kg	Weight of a motor in dynamic operation
M_{eff*}	Nm	Actual effective torque of the motor
m_F	kg	Weight of the forced ventilation unit
M_k	Nm	Permitted tilting torque on the output
M_{k100}	Nm	Permitted tilting torque on the output for $n_{m*} \leq 100$ rpm
M_{k300}	Nm	Permitted tilting torque on the output for $n_{m*} \leq 300$ rpm
M_L	Nm	Load torque
M_{lim}	Nm	Torque limit without compensating for field weakening
M_{limF}	Nm	Torque limit of the motor with forced ventilation
M_{limFW}	Nm	Torque limit with compensation for field weakening (applies to operation on STOBER drive controllers only)
M_{limK}	Nm	Torque limit of the motor with convection cooling
M_{max}	Nm	Maximum torque: the maximum permitted torque the motor is able to deliver over a short period (when accelerating or decelerating) (tolerance ±10%)
m_n	mm	Module
M_{n*}	Nm	Actual torque of the motor in the n-th time segment
M_N	Nm	Nominal torque: the maximum torque of a motor in S1 mode at nominal speed n_N (tolerance ±5%)
		You can calculate other torque values as follows: $M_{N*} = K_{M0} \cdot I^* - M_R$.
M_{Nred}	Nm	Reduced nominal torque of the motor
M_{op}	Nm	Torque of motor at the operating point from the motor characteristic curve at n_{1m*}
M_R	Nm	Frictional torque (of the bearings and seals) of a motor at winding temperature $\Delta\vartheta = 100$ K
n	rpm	Speed
n_{1m*}	rpm	Actual average input speed
n_{1max}	rpm	Maximum permitted input speed
n_{1maxDB}	min^{-1}	Maximum permitted input speed of the gear unit in continuous operation
		(at surrounding temperature of 20 °C)
$n_{1maxDBEL1,2}$	rpm	Maximum permitted input speed of the gear unit in continuous operation Mounting positions EL1, EL2
		(at surrounding temperature of 20 °C)
$n_{1maxDBEL1,2,3,4}$	rpm	Maximum permitted input speed of the gear unit in continuous operation Mounting positions EL1, EL2, EL3, EL4
		(at surrounding temperature of 20 °C)
$n_{1maxDBEL1,2,5,6}$	rpm	Maximum permitted input speed of the gear unit in continuous operation Mounting positions EL1, EL2, EL5, EL6
		(at surrounding temperature of 20 °C)
$n_{1maxDBEL3,4}$	rpm	Maximum permitted input speed of the gear unit in continuous operation Mounting positions EL3, EL4
		(at surrounding temperature of 20 °C)
$n_{1maxDBEL3,4,5,6}$	rpm	Maximum permitted input speed of the gear unit in continuous operation Mounting positions EL3, EL4, EL5, EL6
		(at surrounding temperature of 20 °C)
$n_{1maxDBEL5,6}$	rpm	Maximum permitted input speed of the gear unit in continuous operation Mounting positions EL5, EL6
		(at surrounding temperature of 20 °C)
n_{1maxZB}	min^{-1}	Maximum permitted input speed of the gear unit in cyclic operation
		(at surrounding temperature of 20 °C)
n_{1N}	rpm	Nominal speed at the gear unit input
n_2	rpm	Speed at the gear unit output

Symbol	Unit	Explanation
$\|n_2\|$	rpm	Value of output speed
n_{2m*}	rpm	Actual average output speed
$n_{2m,1*} – n_{2m,8*}$	rpm	Actual average output speed in the respective time segment (1 to 8)
$n_{2m,n*}$	rpm	Actual average output speed in the n-th time segment
n_{2N}	min^{-1}	Nominal speed at the gear unit output
N_{Bstop}	–	Permitted number of braking processes from full speed (n = 3000 rpm) with J_{Bstop} (M_L = 0). The following applies if the values of n and J_{Bstop} differ: N_{Bstop} = $W_{B,Rlim}$ / $W_{B,R/B}$.
n_{m*}	rpm	Actual average motor speed
$n_{m,n*}$	rpm	Actual average speed of the motor in the n-th time segment
n_{mot}	rpm	Speed of the motor
n_N	rpm	Nominal speed: The speed for which the nominal torque M_N is specified
p	–	Number of pole pairs
P_N	kW	Nominal power: the power the motor is able to deliver long term in S1 mode at the nominal point (tolerance ±5 %)
$P_{N,F}$	W	Nominal output of the forced ventilation unit
P_{st}	mm	Pitch of the screw drive
R_{U-V}	Ω	Winding resistance of a motor between two phases at a winding temperature of 20 °C
q_{vF}	m^3/h	Delivery capacity of the forced ventilation unit in open air
S	–	Service factor: Quotient of the nominal torque from the gear unit and the motor without consideration for thermal limiting performance. Represents a value for the reserve of the geared motor.
t	s	Time
t_{1B}	ms	Linking time: time from when the current is turned off until the nominal braking torque is reached
t_{11B}	ms	Response delay: time from when the current is turned off until the torque increases
t_{2B}	ms	Release time (also: disengagement time); time span from when the current is switched off until the brake is completely released
t_{dec}	ms	Stop time
T_{el}	ms	Electrical time constant: ratio of the winding inductance to the winding resistance of a motor: T_{el} = L_{U-V} / R_{U-V}
t_{n*}	s	Duration of the n-th time segment
ϑ_{amb}	°C	Surrounding temperature
$U_{N,B}$	V	Nominal voltage of brake
$U_{N,F}$	V	Nominal voltage of the forced ventilation unit
U_{ZK}	V	DC link voltage: characteristic value of a drive controller
v_{ax}	mm/s	Axial velocity
$v_{ax,m*}$	mm/s	Actual average axial velocity
$v_{ax,m1*} – v_{ax,mn*}$	mm/s	Actual average axial velocity in the respective time segment
$W_{B,R/B}$	J	Work done by friction for braking
$W_{B,Rlim}$	J	Work done by friction until wear limit is reached
$W_{B,Rmax/h}$	J/h	Maximum permitted work done by friction per hour with individual braking
x_2	mm	Distance of the shaft shoulder to the force application point
$x_{B,N}$	mm	Nominal air gap of brake
y_2	mm	Distance of the shaft axis to the axial force application point
z_2	mm	Distance of the shaft shoulder to the middle of the output bearing

23.2 Trademarks

The following names used in connection with the device, its optional equipment and its accessories are trademarks or registered trademarks of other companies:

ACOPOS®	ACOPOS is a registered trademark of ABB Asea Brown Boveri Ltd., Zurich, Switzerland.
DRIVE-CLiQ®,	DRIVE-CLiQ® is a registered trademark of Siemens AG, Munich, Germany.
EnDat®	EnDat® and the EnDat® logo are registered trademarks of Dr. Johannes Heidenhain GmbH, Traunreut, Germany.
HIPERFACE®	HIPERFACE® and the HIPERFACE DSL® logo are registered trademarks of SICK STEGMANN GmbH, Donaueschingen, Germany.
IndraDrive®	IndraDrive® is a registered trademark of Bosch Rexroth AG, Lohr, Germany.
INTERCONTEC®	INTERCONTEC® is a registered trademark of TE Connectivity Industrial GmbH, Niederwinkling, Germany.
RINGFEDER®	RINGFEDER® is a registered trademark of VBG GROUP TRUCK EQUIPMENT GmbH, Krefeld, Germany.
SERVOSTAR®	SERVOSTAR® is a registered trademark of Kollmorgen Corporation, Waltham, USA.
SINAMICS®	SINAMICS® is a registered trademark of Siemens AG, Munich, Germany.

All other trademarks not listed here are the property of their respective owners.

Products that are registered as trademarks are not specially indicated in this documentation. Existing property rights (patents, trademarks, protection of utility models) are to be observed.

23.3 Sales terms and delivery conditions

You can find our current sales terms and delivery conditions at http://www.stoeber.de/en/gtc.

23.4 Publication details

Synchronous servo geared motors catalog ID 442437_en.

You can find right drive controllers in our Drives and Automation catalog, ID 442711_en.

You can find current versions of PDF files online at http://www.stoeber.de/en/downloads/.

ID 442437_en.10 01/2022

STÖBER Antriebstechnik GmbH + Co. KG
Kieselbronner Strasse 12
75177 Pforzheim
Germany
Phone: +49 7231 582-0
mail@stoeber.de
www.stober.com

Service hotline:
+49 7231 582-3000

We reserve the right to make technical changes.

STÖBER